Amerimax Exterior Home Products Alumawood™ Patio Cover, Carport and Commercial Structure Engineering 2021 IBC

PAGES	DRAWING	SECTION DESCRIPTION
2 PAGES	GN01-2021 GN02-2021	GENERAL NOTES
1 PAGE		PROFESSIONAL ENGINEERING STAMPS PAGE
2 PAGES	SC01-2021 SC02-2021	SOLID PANEL STRUCTURAL CONFIGURATIONS ALUMAWOOD STRUCTURAL CONFIGURATIONS
4 PAGES		SECTION 1.0 RAFTER SPANS FOR COMMERCIAL AND PATIO STRUCTURES
38 PAGES		SECTION 2.0 POST SPACING, POST TYPE AND FOOTING SIZE FOR LATTICE COVERS
4 PAGES	LT01-2021 LT02-2021 LT03-2021 LT04-2021	COMPONENT PARTS AND CONNECTION DETAILS FOR LATTICE STRUCTURES
7 PAGES		SECTION 4.0 SOLID COVER PANEL SPANS FOR COMMERCIAL AND PATIO STRUCTURES
51 PAGES		SECTION 5.0 POST SPACING, POST TYPE AND FOOTING SIZE FOR SOLID COVERS
4 PAGES	NP01-2021 NP02-2021 NP03-2021 NP04-2021	COMPONENT PARTS AND CONNECTION DETAILS FOR NEWPORTS
9 PAGES	CD01-2021 CD02-2021 CD03-2021 CD04-2021 CD05-2021 CD06-2021 CD07-2021 CD08-2021 CD09-2021	COMPONENT PARTS AND CONNECTION DETAILS
11 PAGES	Misc1a-2021	MISCELLANEOUS DETAILS
	Misc1b-2021	MISCELLANEOUS DETAILS
	Misc2-2021	FAN BEAM DETAILS
	Misc3-2021	7.0 POST AND FASTENER REQUIREMENTS FOR ALL STRUCTURES
	Misc4a-2021	7.0 ALTERNATIVE FOOTING TABLES
	Misc4b-2021	7.0 ALTERNATIVE FOOTING TABLES
	Misc5a-2021	7.0 REQUIREMENTS FOR SURFACE MOUNTED POSTS ON CONCRETE SLABS OR FOOTINGS FOR SINGLE SPAN ATTACHED LATTICE STRUCTURES
	Misc5b-2021	7.0 REQUIREMENTS FOR SURFACE MOUNTED POSTS ON CONCRETE SLABS OR FOOTINGS FOR SINGLE SPAN ATTACHED LATTICE STRUCTURES
	Misc6-2021	7.0 FORCES ON EXISTING STRUCTURES
	Misc7-2021	STRUCTURAL PROPERTIES OF BEAMS, FASCIA, PANELS AND RAFTERS FOR USE BY DESIGN PROFESSIONALS
	Misc8-2021	CONCRETE SLAB REQUIREMENTS FOR CONSTRAINED FOOTINGS

Live/Ground Snow Loads: 10,15 and 20 psf
Wind Sppeds : up to 115 mph Exp C

Registered Professional Engineer (Civil)
CERTIFICATE NO. 39702
CARL PUTNAM
Date Signed
ARIZONA U.S.A.
Expires 09/30/2024

Digitally signed by Carl M Putnam
Date: 2023.01.20 14:41:28 -05'00'

December 16, 2022

GENERAL NOTES:

1. DESIGNED IN ACCORDANCE WITH THE 2021 INTERNATIONAL BUILDING CODE AND THE 2022 CALIFORNIA BUILDING CODE. THIS DESIGN ALSO CONFORMS TO THE 2021 IRC AND 2022 CRC.

2. ALUMINUM DESIGN IN ACCORDANCE WITH THE 2020 EDITION OF ALUMINUM ASSOCIATION'S SPECIFICATIONS AND CHAPTER 20 OF THE INTERNATIONAL BUILDING CODE.

3. DESIGN LOADINGS: Ct = 1.2, I = 1.0, Ce = 1.0 (ALL EXPOSURES EXCEPT B AND C WHEN LOCATED TIGHT AMONG CONIFERS)

GROUND SNOW LOAD	DESIGN LOAD	
10 PSF	10 PSF	LIVE LOAD ONLY
15 PSF	15 PSF	DESIGN ROOF SNOW LOAD
20 PSF	20 PSF	LIVE LOAD ONLY
25 PSF	21.0 PSF	DESIGN ROOF SNOW LOAD
30 PSF	25.2 PSF	DESIGN ROOF SNOW LOAD
35.7 PSF	30.0 PSF	DESIGN ROOF SNOW LOAD
42 PSF	35.3 PSF	DESIGN ROOF SNOW LOAD
50 PSF	42.0 PSF	DESIGN ROOF SNOW LOAD
60 PSF	50.4 PSF	DESIGN ROOF SNOW LOAD

FOR 0.25/12 < SLOPE < 1/12

WIND SPEEDS IN THE 2021 IBC ARE "BASIC DESIGN WIND SPEED". ALL STRUCTURES DESCRIBED IN THIS REPORT ARE DESIGNED USING PRESSURES CALCULATED FROM "BASIC DESIGN WIND SPEEDS" FOR RISK CATEGORY II. FOR ATTACHED STRUCTURES THE MAXIMUM MEAN ROOF HEIGHT OF THE EXISTING STRUCTURE IS 30'. Kzt WAS ASSUMED AS 1.0 FOR ALL WIND LOADS. SITE LOCATIONS REQUIRING HIGHER A HIGHER Kzt VALUE (ISOLATED HILLS, RIDGES, ESCARPMENTS) WILL REQUIRE HIGHER WIND LOADS AS PER ASCE7-16 SECTION 26.8 AND ARE OUTSIDE THE SCOPE OF THIS REPORT.

NOTE: EXPOSURE B: SHALL APPLY WHEN THE GROUND SURFACE ROUGHNESS CATEGORY B (URBAN AND SUBURBAN AREAS, WOODED AREAS, OR OTHER TERRAIN W/ NUMEROUS CLOSELY SPACED OBSTRUCTIONS HAVING THE SIZE OF A SINGLE FAMILY DWELLING OR LARGER) PREVAILS IN THE UPWIND DIRECTION FOR A DISTANCE OF AT LEAST 1500 FT.

EXPOSURE C: SHALL APPLY WHEN EXPOSURE B AND D (SMOOTH MUD FLATS, SALT FLATS, UNBROKEN ICE AND OTHER) DO NOT.

SEISMIC LOADING
MAXIMUM Ss = 150% SHOWN IN 2021 IBC FIGURE 1613.2.1(1)
Ss > 150% ARE NOT REQUIRED AS PER ASCE7-16 12.14.8.1
S1 NOT APPLICABLE TO THESE STRUCTURES
SITE CLASS = D
BASIC SEISMIC FORCE RESISTING SYSTEM
POSTS EMBEDDED INTO FOOTINGS =ORDINARY STEEL MOMENT FRAME >> R = 1.25
POSTS SURFACE MOUNTED = GENERIC SYSTEM >> R= 1.25
ANALYSIS PROCEDURE = EQUIVALENT LATERAL FORCE PROCEDURE

THESE ROOFS ARE NOT SUBJECT TO MAINTENANCE WORKERS AND HAVE NOT BEEN EVALUATED FOR A CONCENTRATED 300 LBF LOAD.

THE BASIS OF THE DESIGN FORCES ARE IN ACCORDANCE WITH THE BASIC LOAD COMBINATIONS DESCRIBED IN 2021 IBC SECTION 1605.1 INCLUDING EXCEPTION #2 AND ASCE7-16 SECTION 2.4 AND NO FURTHER INCREASES ARE PERMITTED FOR PATIO COVERS RESISTING WIND OR SEISMIC FORCES.

4. THIS ENTIRE ENGINEERING PACKAGE IS NOT REQUIRED FOR MOST BUILDING PERMITS. SUBMISSION FOR A BUILDING PERMIT MUST INCLUDE:
a. GENERAL NOTES (2 PAGES)
b. STRUCTURAL CONFIGURATIONS (1 OR 2 PAGES)
c. RAFTER SPAN TABLES (FOR LATTICE STRUCTURES), PANEL SPAN TABLES FOR SOLID COVER STRUCTURES) OR BOTH (FOR COMBINATION STRUCTURES)
d. HEADER POST SPACING, FOOTING SIZE AND POST TABLE FOR LIVE/SNOW AND WIND LOAD
e. ALL APPROPRIATE DETAILS
f. OTHER DOCUMENTATION REQUIRED BY LOCAL BUILDING AUTHORITY.

5. CONCRETE MIX: CONCRETE WILL MEET THE DURABILITY REQUIREMENTS OF ACI 318-19. PATIO STRUCTURES MAY BE ATTACHED TO CONCRETE SLAB WITHOUT FOOTINGS WHEN THE POST LOAD IS 750# OR LESS AND THE FROST DEPTH IS ZERO. CONCRETE SHALL BE A MINIMUM OF 3.5 INCHES THICK AND NO CRACKS WITHIN 2'-6" OF POSTS. POSTS AND CONCRETE ANCHORS SHALL BE SET BACK A MINIMUM OF 4 INCHES FROM EDGE OR EXPANSION JOINT OF A SLAB.

6. FOOTINGS HAVE BEEN DESIGNED FOR CLASS 5 SOIL AS PER 2021 IBC TABLE 1806.2. ALLOWABLE FOUNDATION PRESSURE IS 1500 POUNDS PER SQUARE FOOT. LATERAL BEARING PRESSURE IS 100 PSF/FT AND IS DOUBLED PER 2021 IBC SECTION 1806.3.4. THESE DESIGN VALUES DO NOT APPLY TO MUD, ORGANIC SILTS, ORGANIC CLAYS, PEAT OR UNPREPARED FILLS AND MAY REQUIRE FURTHER SOIL INVESTIGATION. THE BUILDING OFFICIAL MAY ASSIGN A LOAD BEARING CAPACITY. UNITS IN SNOW/LIVE LOAD AREA OF 25 PSF OR LESS MAY BE BUILT ON 1000 PSF BEARING SOIL W/O ADDITIONAL ENGINEERING. MINIMUM FOOTING DEPTH IS THE LOCAL FROST DEPTH.

7. 20 PSF AND HIGHER LIVE LOAD STRUCTURES MAY BE USED AS COVERS FOR PARKING OF MOTOR VEHICLES. CARPORTS MUST HAVE AT LEAST TWO OPEN SIDES AND HAVE FLOOR SURFACES MADE OF APPROVED NONCOMBUSTIBLE MATERIAL OR ASPHALT.

8. AT LEAST ONE HORIZONTAL DIMENSION (PROJECTION OR WIDTH) OF FREESTANDING COVERS SHALL BE LESS THAN 30'.

9. ALL STEEL SHALL BE GALVANIZED ASTM A-653 G90, A123 G45 OR A153 B-3, PAINTED ASTM A755 OR USE AN APPROVED COATING COMPLYING WITH 2021 IBC SECTION 2203.1.

10. ALTERNATE ALUMINUM ALLOYS OF EQUAL OR HIGHER STRENGTHS MAY BE USED. 3004H2x ALUMINUM MAY BE SUBSTITUTED FOR 3004H3x.

Registered Professional Engineer (Civil)
CERTIFICATE NO. 39702
CARL PUTNAM
Date Signed
ARIZONA, U.S.A.
Expires 09/30/2024

JAN 20 2023

Amerimax™
EXTERIOR HOME PRODUCTS

28921 US Hwy 74
Romoland, CA 92585

DRAWN BY: CMP		
SCALE: NONE	DRAWING OR PART NAME GENERAL NOTES	
DATE:	DRAWING OR PART NUMBER GN01–2021	SHEET 1 OF 2

GENERAL NOTES:
(CONTINUED FROM SHEET NO. 1)

11. STEEL FASTENERS SHALL BE EITHER STAINLESS (300 SERIES), GALVANIZED OR DOUBLE CADMIUM PLATED. BOLTS SHALL BE ASTM A-307 HOT DIPPED GALVANIZED, MECHANICALLY GALVANIZED, ZINC ELECTROPLATED, ALUMINIZED OR 300 SERIES STAINLESS STEEL. CONCRETE ANCHOR BOLTS ARE SPECIFIED IN THE DETAILS. ALL WOOD SCREWS MUST COMPLY WITH ANSI/ASME STANDARD B18.6.1 AND AWC NDS-18 12.1.5. ALL LAG SCREWS MUST COMPLY WITH ANSI/ASME B18.2.1 AND AWC NDS-18 12.1.4. ALL STEEL WASHERS TO BE ASTM F844 W/ DIMENSIONS IN ACCORDANCE WITH ASME B18.22.1, TYPE A. ALL STEEL NUTS TO BE ASTM A563. THE MINIMUM WASHER DIAMETER SHALL BE 1" FOR BOLTED CONNECTIONS. SCREWS AND BOLTS WILL HAVE A MINIMUM EDGE DISTANCE OF 2X FASTENER DIAMETER.

12. EMBEDDED POST SURFACES SHALL BE CLEAN AND FREE FROM OILY SURFACES.

13. HEADER SPLICES SHALL NOT BE LOCATED NEARER TO THE END OF THE STRUCTURE THAN THE FIRST INTERIOR POST. (EXCEPT FOR FULL STRENGTH SPLICES) FULL STRENGTH SPLICES (DETAILS U, AND X) MAY BE LOCATED ANYWHERE.

14. ALL SELF DRILLING AND SELF TAPPING SCREWS MUST COMPLY TO ICC- ESR 1271, 1408, 1976, 2196, 3006, 3215, 3223, 3231, 3294, 3332, 3528, 3558, 4229, 5057, 4374 OR EQUIVALENT AND USE HEADS W/ DIAMETERS EQUAL TO #8 = $\frac{5}{16}$", #10 = $\frac{3}{8}$", #12 = $\frac{13}{32}$" AND #14 = $\frac{1}{2}$" OR STEEL WASHERS OF SIMILAR DIAMETER AND AS PER GENERAL NOTE #11

15. STRUCTURES MAY NOT BE ENCLOSED IN ANY MANNER WITHOUT ADDITIONAL ENGINEERING ANALYSIS OR APPROVAL OF THE LOCAL BUILDING AUTHORITY.

16. ALUMINUM SOLID ROOF PANELS ARE CLASS A FIRE RATED AS INDICATED BY THE EXCEPTION #2 IN 2021 IBC SECTION 1505.2. ALUMINUM IS A NONCOMBUSTIBLE MATERIAL AS PER 2021 IBC CHAPTER 20 AND THE ALUM ASSOC. 2020 ALUMINUM DESIGN MANUAL (AA ADM 1) PART III SECTION 7.

17. STRUCTURES MAY BE ATTACHED TO EAVE OVERHANGS PER SCHEDULE.

18. WHERE ALUMINUM ALLOY PARTS ARE IN CONTACT WITH DISSIMILAR METALS (OTHER THAN STAINLESS, ALUMINIZED OR GALVANIZED STEEL) OR ABSORBENT BUILDING MATERIALS, LIKELY TO BE CONTINUOUSLY OR INTERMITTENTLY WET, THE FAYING SURFACES SHALL BE PAINTED OR OTHERWISE SEPARATED IN ACCORDANCE WITH THE ALUMINUM DESIGN MANUAL PART I SECTION M7.1 OR M7.2.

19. WHEN A SINGLE SPAN ATTACHED UNIT HAS POSTS ATTACHED TO A WOODEN DECK, THE MAXIMUM DEAD LOAD + ROOF LOAD FROM THE PATIO COVER IS 750 LBS AND THE POST SPACING SHALL NOT EXCEED THAT SPECIFIED FOR ATTACHING TO A CONCRETE SLAB. THE MAXIMUM CONNECTION UPLIFT LOAD IS 1162 LBS FOR 115 MPH EXP C WIND SPEED. THE EXISTING DECK STRUCTURE MUST BE ADEQUATE TO SUSTAIN THESE ADDITIONAL LOADS. THE STRUCTURAL ADEQUACY OF THE DECK TO SAFELY SUSTAIN THESE ADDITIONAL LOADS WILL REQUIRE APPROVAL BY LOCAL BUILDING AUTHORITY OR ADDITIONAL ENGINEERING. SEE DETAIL L13, N12 OR AL. CONSTRUCTION OUTSIDE OF THESE PARAMETERS MAY REQUIRE ADDITIONAL ENGINEERING.

20. NOTE INTENTIONALLY LEFT BLANK.

21. DRIFTING SNOW IS ADDRESSED IN DETAIL M4. SLIDING SNOW IS BEYOND THE SCOPE OF THIS REPORT.

22. ALL MULTISPAN TABLES AND DETAILS ASSUME EQUAL SPANS WITHIN 20%. ALL SPECIFICATIONS MUST BE BASED ON LONGEST ACTUAL SPAN.

23. WOOD USED IN CONNECTIONS SHALL BE PROTECTED FROM WEATHER AS PER IBC SECTION 1402.2 (WALLS) AND/OR 1503 (ROOFS), WHICHEVER IS MORE APPROPRIATE.

GENERAL NOTES FOR LATTICE STRUCTURES:
(PERTAINS TO LATTICE STRUCTURES ON DRAWINGS SC02 AND LT01 THRU LT04.)
1. SEE GENERAL NOTE #3 FOR LIVE AND SNOW LOADS.

2. NOTE INTENTIONALLY LEFT BLANK.

3. SINGLE SPAN ATTACHED LATTICE STRUCTURES THAT DO NOT USE DETAIL L29 ON SHEET LT03 or M5 ON SHEET Misc1b MUST COMPLY WITH TABLE L1 AND L2 ON SHEET Misc5a OR Misc5b.

Registered Professional Engineer (Civil)
CERTIFICATE NO. 39702
CARL PUTNAM
Date Signed
ARIZONA U.S.A.
Expires 09/30/2024

JAN 20 2023

Amerimax™
EXTERIOR HOME PRODUCTS

28921 US Hwy 74
Romoland, CA 92585

DRAWN BY: CMP		
SCALE: NONE	DRAWING OR PART NAME: GENERAL NOTES	
DATE:	DRAWING OR PART: GN02-2021	SHEET 2 OF 2

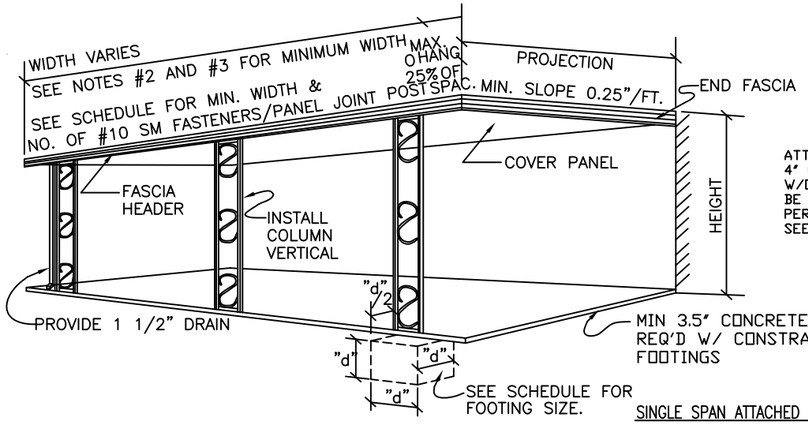

SINGLE SPAN ATTACHED STRUCTURE

ATTACHMENT TO MIN 4" CONCRETE SLAB W/O A FOOTING MAY BE USED WHERE PERMITTED SEE SCHEDULE

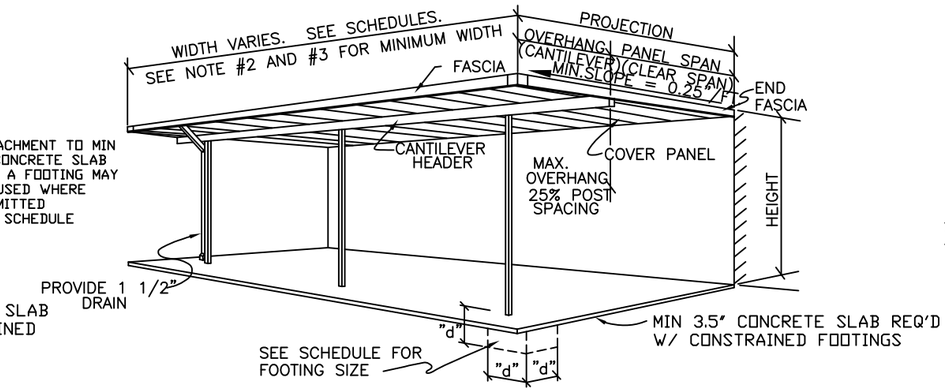

SINGLE SPAN ATTACHED CANTILEVERED STRUCTURE

MULTISPAN FREESTANDING STRUCTURE

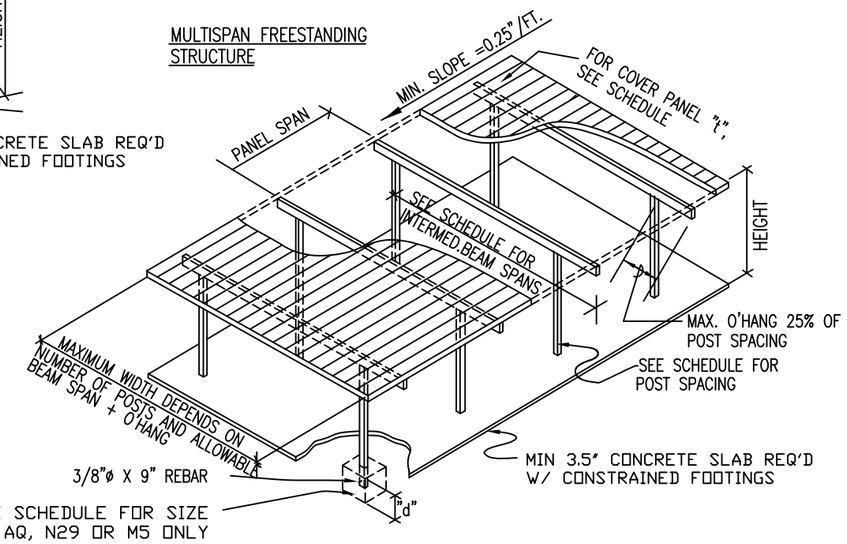

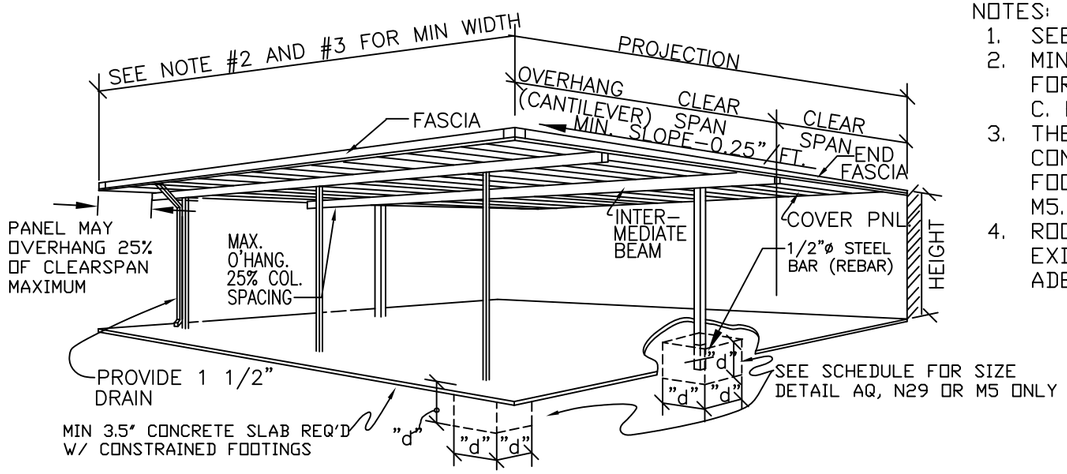

MULTISPAN ATTACHED CANTILEVERED STRUCTURE

NOTES:

1. SEE SCHEDULES FOR POST SPACING
2. MIN WIDTH IS 100% OF PROJECTION FOR WIND SPEEDS UP TO 150 MPH EXP C. HIGHER WIND SPEEDS MUST BE 110%
3. THERE IS NO MINIMUM WIDTH IF USING CONSTRAINED OR NONCONSTRAINED FOOTINGS AND DETAILS N29, AQ OR M5.
4. ROOF SLOPE IS ALWAYS AWAY FROM EXISTING STRUCTURE UNLESS ADEQUATE DRAINAGE EXISTS

SINGLE SPAN FREESTANDING STRUCTURE

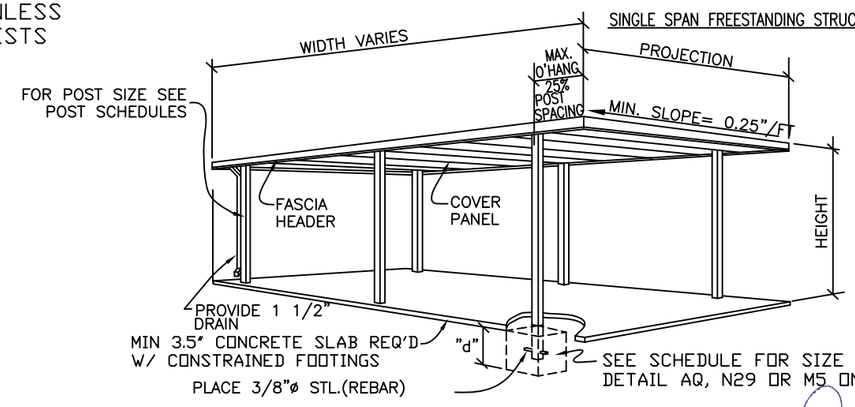

PATIO COVERS ARE LIMITED TO 12' HEIGHT. CARPORTS AND COMMERCIAL STRUCTURES ARE LIMITED TO 15' HEIGHT.

NONCONSTRAINED FOOTINGS DO NOT REQUIRE A CONCRETE SLAB

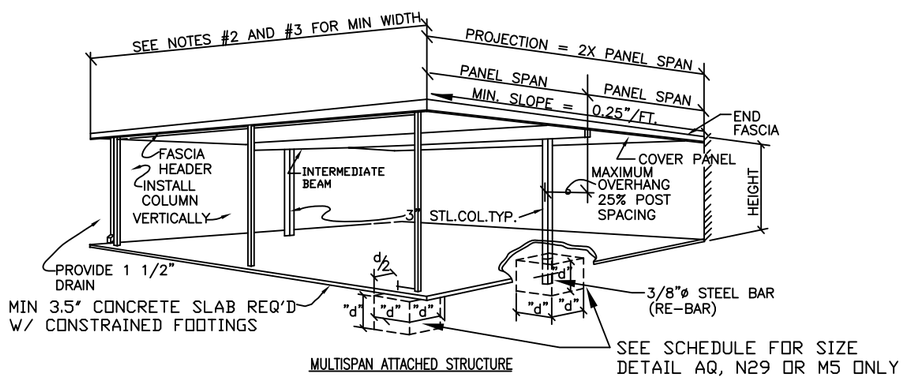

MULTISPAN ATTACHED STRUCTURE

Registered Professional Engineer (Civil) CERTIFICATE NO. 39702 CARL PUTNAM Date Signed ARIZONA U.S.A. Expires 09/30/2024

JAN 20 2023

Amerimax™ EXTERIOR HOME PRODUCTS

28921 US Hwy 74
Romoland, CA 92585

DRAWN BY: CMP		
SCALE: NONE	DRAWING OR PART NAME	SOLID PANEL STRUCTURAL CONFIGURATIONS
DATE:	DRAWING OR PART NUMBER	SC01-2021 — SHEET 1 OF 2

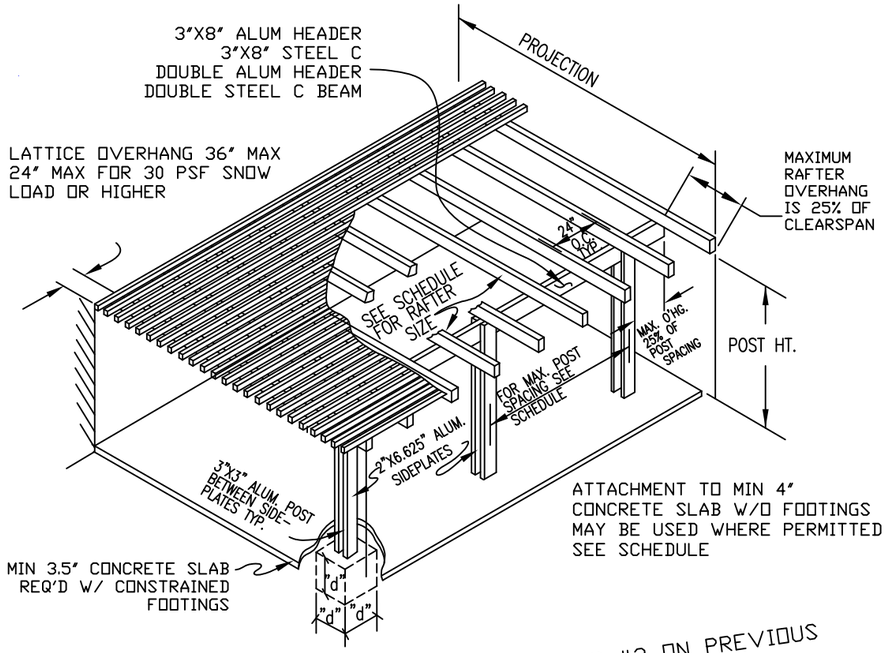

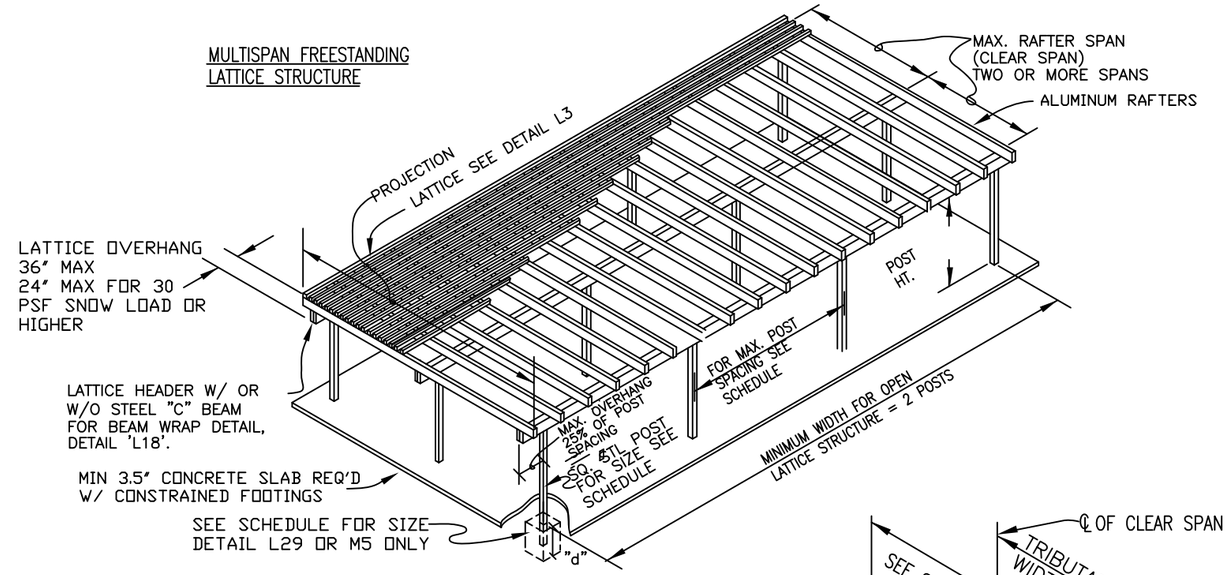

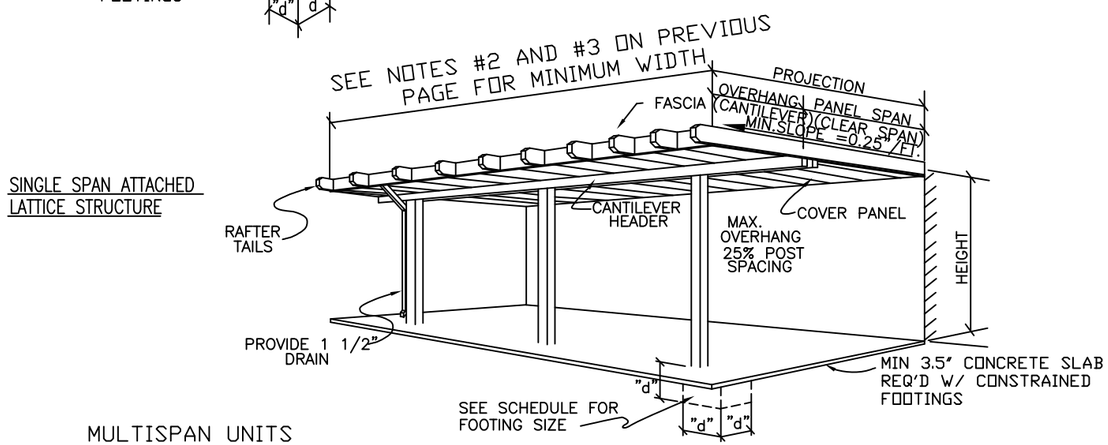

SINGLE SPAN ATTACHED CANTILEVERED STRUCTURE

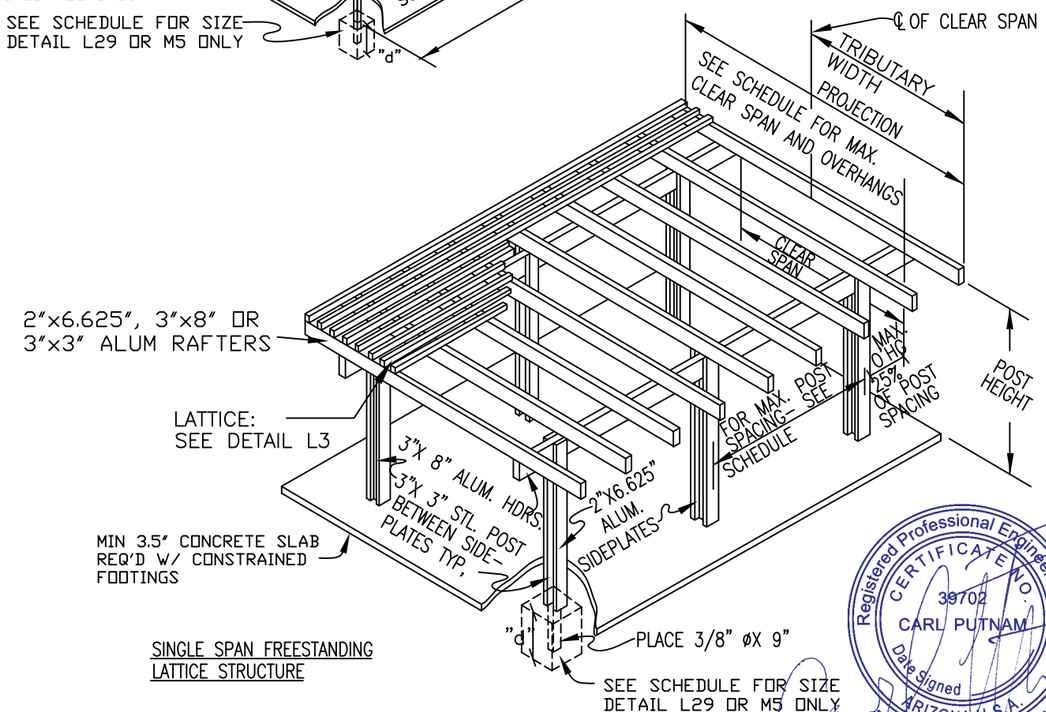

SINGLE SPAN FREESTANDING
LATTICE STRUCTURE

MULTISPAN UNITS
REFER TO GENERAL
NOTE 22.

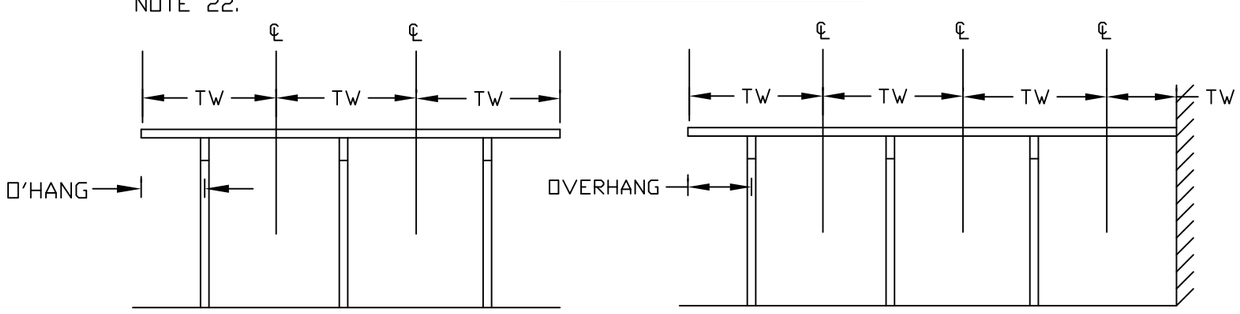

FREESTANDING STRUCTURE ATTACHED STRUCTURE

TRIBUTARY WIDTH (TW) DIAGRAM

Registered Professional Engineer (Civil)
CERTIFICATE NO. 39702
CARL PUTNAM
Date Signed
ARIZONA, U.S.A.
Expires 09/30/2024

JAN 20 2023

Amerimax™
EXTERIOR HOME PRODUCTS

28921 US Hwy 74
Romoland, CA 92585

DRAWN BY: CMP		
SCALE: NONE	DRAWING OR PART NAME: ALUMAWOOD STRUCTURAL CONFIGURATIONS	
DATE:	DRAWING OR PART NUMBER: SCO2-2021	SHEET 2 OF 2

SECTION 1.0 LATTICE COVER INSTRUCTIONS AND POST TABLES

Registered Professional Engineer (Civil) CERTIFICATE NO. 39702 CARL PUTNAM Date Signed ARIZONA U.S.A. Expires 09/30/2023

JAN 20 2023

GENERAL INSTRUCTIONS FOR THESE TABLES

1. CHOOSE FREESTANDING OR ATTACHED STRUCTURE
2. CHOOSE PROJECTION (DIMENSION PARALLEL W/ RAFTERS), WIDTH (DIMENSION PERP TO RAFTERS) AND OVERHANG OF UNIT
3. DETERMINE WIND, LIVE (OR GROUND SNOW LOAD) AND Ss (see Gen Not #3) OF STRUCTURE SITE
   (PATIO COVERS USE 10 PSF MIN, CARPORT & COMMERCIAL UNITS USE 20 PSF MIN)
4. a. DETERMINE IF RAFTERS ARE SINGLE OR MULTISPAN. CHOOSE A RAFTER FROM **SECTION 1.0** THAT HAS ADEQUATE CLEARSPAN FOR YOUR NEEDS.
   b. FOR AN ATTACHED STRUCTURE, CONFIRM THE ALLOWABLE SPAN BASED ON THE RAFTER SUPPORT DETAIL.
   c. DETERMINE THE RAFTER TO HEADER FASTENING REQUIREMENTS
5. DETERMINE TRIBUTARY WIDTH FROM TABLE 1.1 OR CALCULATE FROM TRIBUTARY DIAGRAM ON SC02 PAGE 2 OF 2
6. LOCATE HEADER TABLE IN **SECTION 2.0** W/ CORRECT PARAMETERS
   a. GROUND SNOW LOAD, SEE GEN NOTE #3
   b. LIVE LOAD, SEE #3 ABOVE
   c. BASIC DESIGN WIND SPEED, SEE GEN NOTE #3
   d. WIND EXPOSURE, SEE GEN NOTE #3
   e. SEISMIC Ss, SEE GEN NOTE #3
   f. ATTACHED OR FREESTANDING
   g. TRIBUTARY WIDTH
   h a-e ARE SET BY YOUR LOCAL BUILDING AUTHORITY
7. CHOOSE A HEADER FROM TABLES IN **SECTION 2.0** THAT HAS ADEQUATE POST SPACING. FOR PATIO COVERS SUPPORTED BY CONCRETE SLAB GOT TO STEP SLAB7
8. DETERMINE FOOTING SIZE
   USE THE UPLIFT FOOTING IF **BOTH** OF THESE CONDITIONS ARE MET
   a. STRUCTURE IS ATTACHED TO AN EXISTING STRUCTURE
   b. TABLES L1 AND L2 ON SHEET Misc5 ARE SATISFIED
   c. GO TO #9a TO DETERMINE POST TYPE
   IF **EITHER** a OR b ARE **NOT** TRUE THEN:
   d. CHOOSE CONSTRAINED FOOTING SIZE FROM SECTION 2.0 BASED ON THE POST HEIGHT
   e. USE THE **LARGER** OF THE UPLIFT OR CONSTRAINED FOOTING SIZE
   f. CONSTRAINED FOOTINGS **MUST** USE DETAIL L29 OR M5
   g. GO TO 9b
9. DETERMINE POST TYPE
   a. IF **BOTH** 8a AND 8b ARE TRUE THEN USE POST SHOWN IN TABLE IN SECTION 2.0 UNDER MIN POST TYPE. CROSS REFERENCE LETTER CODE W/ TABLE 1.2
   IF THIS POST'S MAX HEIGHT IS TOO SHORT, UPGRADE THE POST.
   EXAMPLE: IF POST CODE FROM SECTION 2.0 IS H3, WHICH HAS A MAX HEIGHT OF 9' BUT A 10' IS DESIRED THEN UPGRADE POST TO TYPE I1
   b. IF EITHER 8a OR 8b ARE **NOT** TRUE THEN:
   DETERMINE POST TYPE FROM CROSS REFERENCING THE UPLIFT FOOTING AND CONSTRAINED FOOTING ON TABLE 1.3
   example 1: A 40" UPLIFT FOOTING AND A 20" CONSTRAINED FOOTING ARE REQUIRED. POST TYPE "H4" IS REQUIRED. TABLE 1.2 SHOWS POST TYPE "H4" TO BE A 0.041"X3"X3" STEEL CLOVER POST WITH A MAX HEIGHT OF 8'.
   example 2: A 20" UPLIFT FOOTING AND A 40" CONSTRAINED FOOTING ARE REQUIRED. POST TYPE "K2" IS REQUIRED. TABLE 1.2 SHOWS POST TYPE "K2" TO BE A 3/16"X4"X4" STEEL POST WITH A MAX HEIGHT OF 12'.
10. DETERMINE HEADER TO POST OR EXISTING STRUCTURE REQUIREMENTS
11. USE THE APPROPRIATE DETAILS (L1-L34) ON SHEETS LT01 TO LT04
12. UPLIFT FOOTING MAY CHANGE SHAPE (ROUND, SET DEPTH) OR REDUCE SIZE USING TABLES 7.8, 7.9, 7.10, 7.11 AND 7.12.
13. CONSTRAINED FOOTINGS MAY CHANGE SHAPE OR BECOME NONCONSTRAINED USING TABLE 7.8
    CONSTRAINED FOOTINGS MAY BE REDUCED IN SIZE USING TABLE 7.12

FOR PATIO SLABS FOLLOW 1-7 FROM ABOVE THEN

SLAB 7. FROM THE APPLICABLE TABLE IN SECTION 2.0, USE THE **SMALLER** OF THE POST SPACING "ON SLAB" OR HEADER POST SPACING
SLAB 8. BOTH 8a AND 8b MUST BE TRUE
SLAB 9. FOLLOW **9a** FROM ABOVE
SLAB 10. FOLLOW 10 AND 11 FROM ABOVE
SLAB 11. FOR **TWO** POST STRUCTURES USE **TABLE 7.1** ON SHEET **Misc3** TO DETERMINE **"ON SLAB"** POST POST SPACING REQUIREMENTS INSTEAD OF SECTION 2.0. **HEADER** POST SPACING REQUIREMENTS ARE STILL DETERMINED FROM SECTION 2.0

TABLE 1.1 TRIBUTARY WIDTHS FOR SINGLE SPAN ATTACHED STRUCTURES

OVER-HANG	PROJECTION OF SINGLE SPAN STRUCTURES (FT) 6'	7'	8'	9'	10'	11'	12'	13'	14'	15'	16'	17'	18'	19'	20'	21'	22'
0'	3'	3.5'	4'	4.5'	5'	5.5'	6'	6.5'	7'	7.5'	8'	8.5'	9'	9.5'	10'	10.5'	11'
0.5'	3.25'	3.75'	4.25'	4.75'	5.25'	5.75'	6.25'	6.75'	7.25'	7.75'	8.25'	8.75'	9.25'	9.75'	10.3'	10.8'	11.3'
1'	3.5'	4'	4.5'	5'	5.5'	6'	6.5'	7'	7.5'	8'	8.5'	9'	9.5'	10'	10.5'	11'	11.5'
1.5'	n/a	4.25'	4.75'	5.25'	5.75'	6.25'	6.75'	7.25'	7.75'	8.25'	8.75'	9.25'	9.75'	10.3'	10.8'	11.3'	11.8'
2'	n/a	n/a	n/a	5.5'	6'	6.5'	7'	7.5'	8'	8.5'	9'	9.5'	10'	10.5'	11'	11.5'	12'
2.5'	n/a	n/a	n/a	n/a	n/a	6.75'	7.25'	7.75'	8.25'	8.75'	9.25'	9.75'	10.25'	10.8'	11.3'	11.8'	12.3'
3'	n/a	n/a	n/a	n/a	n/a	n/a	n/a	8'	8.5'	9'	9.5'	10'	10.5'	11'	11.5'	12'	12.5'
3.5'	n/a	n/a	n/a	n/a	n/a	n/a	n/a	n/a	n/a	9.25'	9.75'	10.25'	10.75'	11.3'	11.8'	12.3'	12.8'
4'	n/a	n/a	n/a	n/a	n/a	n/a	n/a	n/a	n/a	n/a	n/a	10.5'	11'	11.5'	12'	12.5'	13'
4.5'	n/a	n/a	n/a	n/a	n/a	n/a	n/a	n/a	n/a	n/a	n/a	n/a	n/a	11.8'	12.3'	12.8'	13.3'
5'	n/a	n/a	n/a	n/a	n/a	n/a	n/a	n/a	n/a	n/a	n/a	n/a	n/a	n/a	n/a	13'	13.5'

Table 1.2

Post Description	Max Hgt	POST Type	Detail
Twin 0.060"x1.5"x1.5" Scroll	10'	A1	AC
0.040"x3"x3" Aluminum Post	10'	A2	L4
0.042"x3"x8" Aluminum Post	11'	A3	L1
0.024"x3"x3"Post with 0.024" Sideplates	10'	B	L24
0.040"x3"x3"Post with 0.024" Sideplates	10'	C	L24
Clover 0.030"x3"x3" Alum	11'	D	L11
Clover 0.040"x3"x3" Alum	11'	E	L11
0.040"x3"x3"Post with 0.032" Sideplates	10'	F	L24
Colonial 0.062" Extruded	11'	G	AE
0.041"x3"x3" Steel Clover	11'	H1	L11
0.041"x3"x3" Steel Clover	10'	H2	L11
0.041"x3"x3" Steel Clover	9'	H3	L11
0.041"x3"x3" Steel Clover	8'	H4	L11
0.041"x3"x3" Steel Clover	7'	H5	L11
1/8"x3"x3" Steel Square	12'	I1	L21
1/8"x3"x3" Steel Square	10'	I2	L21
3/16"x3"x3" Steel Square	12'	J1	L21
3/16"x3"x3" Steel Square	10'	J2	L21
3/16"x4"x4" Steel Square	15'	K1	L21
3/16"x4"x4" Steel Square	12'	K2	L21
3/16"x5"x5" Steel Square	15'	L1	L21
3/16"x5"x5" Steel Square	12'	L2	L21
3/16"x6"x6" Steel Square	15'	M1	L21

Table 1.3

Uplift d (in)	Constrained d (in) 16	17	18	19	20	21	22	23	24	25	26	27	28	29	30	31	32	33	34	35	36	37	38	39	40	41	42	43	44	45	46	47	48	49
14	H1	H1	H1	H1	H1	H1	H1	H1	I1	I1	I1	I1	I1	I1	I1	I1	J1	J1	J2	J2	J2	J2	J2	J2	K2	K2	K2	K2	K2	M1	M1	M1	M1	M1
15	H1	H1	H1	H1	H1	H1	H1	H1	I1	I1	I1	I1	I1	I1	I1	I1	J1	J1	J2	J2	J2	J2	J2	J2	K2	K2	K2	K2	K2	M1	M1	M1	M1	M1
16	H1	H1	H1	H1	H1	H1	H1	H1	I1	I1	I1	I1	I1	I1	I1	I1	J1	J1	J2	J2	J2	J2	J2	J2	K2	K2	K2	K2	K2	M1	M1	M1	M1	M1
17	H1	H1	H1	H1	H1	H1	H1	H1	I1	I1	I1	I1	I1	I1	I1	I2	J1	J1	J2	J2	J2	J2	J2	J2	K2	K2	K2	K2	K2	M1	M1	M1	M1	M1
18	H1	H1	H1	H1	H1	H1	H1	H1	I1	I1	I1	I1	I1	I1	I1	I2	J1	J1	J2	J2	J2	J2	J2	J2	K2	K2	K2	K2	K2	M1	M1	M1	M1	M1
19	H1	H1	H1	H1	H1	H1	H1	H1	I1	I1	I1	I1	I1	I1	I1	J1	J1	J1	J2	J2	J2	J2	J2	J2	K2	K2	K2	K2	K2	M1	M1	M1	M1	M1
20	H1	H1	H1	H1	H1	H1	H1	H1	I1	I1	I1	I1	I1	I1	I1	J1	J1	J1	J2	J2	J2	J2	J2	J2	K2	K2	K2	K2	K2	M1	M1	M1	M1	M1
21	H1	H1	H1	H1	H1	H1	H1	H1	I1	I1	I1	I1	I1	I1	I1	J1	J1	J1	J2	J2	J2	J2	J2	J2	K2	K2	K2	K2	K2	M1	M1	M1	M1	M1
22	H1	H1	H1	H1	H1	H1	H1	H2	I1	I1	I1	I1	I1	I1	I1	J1	J1	J1	J2	J2	J2	J2	J2	J2	K2	K2	K2	K2	K2	M1	M1	M1	M1	M1
23	H1	H1	H1	H1	H1	H1	H1	H2	I1	I1	I1	I1	I1	I1	I1	J1	J1	J1	J2	J2	J2	J2	J2	J2	K2	K2	K2	K2	K2	M1	M1	M1	M1	M1
24	H1	H1	H1	H1	H1	H1	H1	H3	I1	I1	I1	I1	I1	I1	I1	J1	J1	J1	J2	J2	J2	J2	J2	J2	K2	K2	K2	K2	K2	M1	M1	M1	M1	M1
25	H1	H1	H1	H1	H1	H1	H1	H4	I1	I1	I1	I1	I1	I1	I1	J1	J1	J1	J2	J2	J2	J2	J2	J2	K2	K2	K2	K2	K2	M1	M1	M1	M1	M1
26	H1	H1	H1	H1	H1	H1	H1	H5	I1	I1	I1	I1	I1	I1	I1	J1	J1	J1	J2	J2	J2	J2	J2	J2	K2	K2	K2	K2	K2	M1	M1	M1	M1	M1
27	H1	H1	H1	H1	H1	H1	H1	H5	I1	I1	I1	I1	I1	I1	I1	J1	J1	J1	J2	J2	J2	J2	J2	J2	K2	K2	K2	K2	K2	M1	M1	M1	M1	0
28	H1	H1	H1	H1	H1	H1	H1	I1	I1	I1	I1	I1	I1	I1	I1	J1	J1	J1	J2	J2	J2	J2	J2	J2	K2	K2	K2	K2	K2	M1	M1	M1	M1	0
29	H1	H1	H1	H1	H1	H1	H2	I1	I1	I1	I1	I1	I1	I1	I1	J1	J1	J1	J2	J2	J2	J2	J2	J2	K2	K2	K2	K2	K2	M1	M1	M1	M1	0
30	H1	H1	H1	H1	H1	H1	H3	I1	I1	I1	I1	I1	I1	I1	I2	J1	J1	J1	J2	J2	J2	J2	J2	J2	K2	K2	K2	K2	K2	M1	M1	M1	M1	0
31	H1	H1	H1	H1	H1	H1	H3	I1	I1	I1	I1	I1	I1	I1	I2	J1	J1	J1	J2	J2	J2	J2	J2	K1	K2	K2	K2	K2	K2	M1	M1	M1	M1	0
32	H1	H1	H1	H1	H1	H2	H4	I1	I1	I1	I1	I1	I1	I1	I2	J1	J1	J2	J2	J2	J2	J2	J2	K1	K2	K2	K2	K2	K2	M1	M1	M1	M1	0
33	H1	H1	H1	H1	H1	H2	H4	I1	I1	I1	I1	I1	I1	I1	I2	J1	J1	J2	J2	J2	J2	J2	J2	K1	K2	K2	K2	K2	K2	M1	M1	M1	M1	0
34	H1	H1	H1	H1	H1	H3	H5	I1	I1	I1	I1	I1	I1	I1	J1	J1	J1	J2	J2	J2	J2	J2	J2	K1	K2	K2	K2	K2	K2	M1	M1	M1	M1	0
35	H1	H1	H1	H1	H2	H3	I1	I1	I1	I1	I1	I1	I1	I1	J1	J1	J1	J2	J2	J2	J2	J2	J2	K2	K2	K2	K2	K2	K2	M1	M1	M1	M1	0
36	H1	H1	H1	H1	H2	H4	I1	I1	I1	I1	I1	I1	I1	I2	J1	J1	J1	J2	J2	J2	J2	J2	J2	K2	K2	K2	K2	K2	K2	M1	M1	M1	M1	0
37	H1	H1	H1	H2	H3	H4	I1	I1	I1	I1	I1	I1	I1	I2	J1	J1	J1	J2	J2	J2	J2	J2	J2	K2	K2	K2	K2	K2	L1	M1	M1	M1	M1	0
38	H1	H1	H1	H2	H3	H5	I1	I1	I1	I1	I1	I1	I1	I2	J1	J1	J1	J2	J2	J2	J2	J2	J2	K2	K2	K2	K2	K2	L1	M1	M1	M1	M1	0
39	H1	H1	H2	H3	H4	H5	I1	I1	I1	I1	I1	I1	I1	I2	J1	J1	J2	J2	J2	J2	J2	J2	J2	K2	K2	K2	K2	K2	L1	M1	M1	M1	M1	0
40	H1	H2	H2	H3	H4	I1	I1	I1	I1	I1	I1	I1	I2	I2	J1	J1	J2	J2	J2	J2	J2	J2	K1	K2	K2	K2	K2	K2	L1	M1	M1	M1	M1	0
41	H2	H2	H3	H3	H4	I1	I1	I1	I1	I1	I1	I1	I2	J1	J1	J1	J2	J2	J2	J2	J2	J2	K1	K2	K2	K2	K2	K2	M1	M1	M1	M1	M1	0
42	H2	H3	H3	H4	H5	I1	I1	I1	I1	I1	I1	I1	I2	J1	J1	J1	J2	J2	J2	J2	J2	J2	K1	K2	K2	K2	K2	K2	M1	M1	M1	M1	M1	0
43	H3	H3	H3	H4	H5	I1	I1	I1	I1	I1	I1	I2	I2	J1	J1	J1	J2	J2	J2	J2	J2	J2	K1	K2	K2	K2	K2	K2	M1	M1	M1	M1	M1	0
44	H3	H3	H4	H5	I1	I1	I1	I1	I1	I1	I1	I2	I2	J1	J1	J2	J2	J2	J2	J2	J2	J2	K1	K2	K2	K2	K2	K2	M1	M1	M1	M1	M1	0
45	H3	H4	H4	H5	I1	I1	I1	I1	I1	I1	I1	I2	J1	J1	J1	J2	J2	J2	J2	J2	J2	J2	K1	K2	K2	K2	K2	K2	M1	M1	M1	M1	M1	0
46	H4	H4	H5	I1	I1	I1	I1	I1	I1	I1	I2	I2	J1	J1	J1	J2	J2	J2	J2	J2	J2	J2	K1	K2	K2	K2	K2	K2	M1	M1	M1	M1	M1	0
47	H4	H5	H5	I1	I1	I1	I1	I1	I1	I1	I2	I2	J1	J1	J1	J2	J2	J2	J2	J2	J2	K1	K2	K2	K2	K2	K2	K2	M1	M1	M1	M1	M1	0
48	H5	H5	I1	I1	I1	I1	I1	I1	I1	I2	I2	I2	J1	J1	J2	J2	J2	J2	J2	J2	J2	K1	K2	K2	K2	K2	K2	K2	M1	M1	M1	M1	M1	0
49	H5	I1	I1	I1	I1	I1	I1	I1	I2	I2	I2	J1	J1	J1	J2	J2	J2	J2	J2	J2	J2	K1	K2	K2	K2	K2	K2	L1	M1	M1	M1	M1	0	0
50	H5	I1	I1	I1	I1	I1	I1	I1	I2	I2	I2	J1	J1	J1	J2	J2	J2	J2	J2	J2	J2	K1	K2	K2	K2	K2	K2	L1	M1	M1	M1	M1	0	0
51	I1	I1	I1	I1	I1	I1	I1	I2	I2	I2	J1	J1	J1	J2	J2	J2	J2	J2	J2	J2	K1	K1	K2	K2	K2	K2	K2	L1	M1	M1	M1	M1	0	0
52	I1	I1	I1	I1	I1	I1	I2	I2	I2	J1	J1	J1	J2	J2	J2	J2	J2	J2	J2	J2	K1	K1	K2	K2	K2	K2	K2	L1	M1	M1	M1	M1	0	0

SECTION 1.0 RAFTER SPANS FOR COMMERCIAL AND PATIO STRUCTURES

0.024"x2"x6.625" Rafter DetailL2 (Single Span)

Ground Snow Load (psf)	Rafter Spacing (in)	Wind Speed and Exposure Exp B 120	130	140	Exp C 105	110	115
10	24"	8'-9"	8'-9"	8'-9"	8'-9"	8'-9"	8'-9"
LIVE	20"	10'-6"	10'-6"	10'-2"	10'-6"	10'-6"	10'-6"
	16"	13'-0"	12'-5"	11'-5"	13'-0"	12'-5"	11'-9"
	12"	15'-1"	14'-1"	13'-1"	14'-10"	14'-1"	13'-6"
		Exposure C 120	130	140	150	160	170
10	24"	8'-9"	7'-8"	6'-4"	6'-4"	5'-5"	4'-2"
LIVE	20"	10'-0"	9'-2"	7'-10"	7'-10"	6'-7"	4'-11"
	16"	11'-3"	10'-3"	9'-5"	9'-5"	8'-5"	6'-2"
	12"	12'-11"	11'-10"	10'-10"	10'-10"	10'-1"	8'-5"
20	24"	4'-5"	4'-5"	4'-5"	4'-5"	4'-5"	4'-2"
LIVE	20"	5'-3"	5'-3"	5'-3"	5'-3"	5'-3"	4'-11"
	16"	6'-7"	6'-7"	6'-7"	6'-7"	6'-7"	6'-2"
	12"	8'-9"	8'-9"	8'-9"	8'-9"	8'-9"	8'-5"
25	24"	4'-2"	4'-2"	4'-2"	4'-2"	4'-2"	4'-2"
	20"	5'-0"	5'-0"	5'-0"	5'-0"	5'-0"	4'-11"
	16"	6'-3"	6'-3"	6'-3"	6'-3"	6'-3"	6'-2"
	12"	8'-4"	8'-4"	8'-4"	8'-4"	8'-4"	8'-4"
30	24"	3'-6"	3'-6"	3'-6"	3'-6"	3'-6"	3'-6"
	20"	4'-2"	4'-2"	4'-2"	4'-2"	4'-2"	4'-2"
	16"	5'-3"	5'-3"	5'-3"	5'-3"	5'-3"	5'-3"
	12"	7'-0"	7'-0"	7'-0"	7'-0"	7'-0"	7'-0"
36	24"	2'-11"	2'-11"	2'-11"	2'-11"	2'-11"	2'-11"
	20"	3'-6"	3'-6"	3'-6"	3'-6"	3'-6"	3'-6"
	16"	4'-5"	4'-5"	4'-5"	4'-5"	4'-5"	4'-5"
	12"	5'-10"	5'-10"	5'-10"	5'-10"	5'-10"	5'-10"
42	24"	2'-6"	2'-6"	2'-6"	2'-6"	2'-6"	2'-6"
	20"	3'-0"	3'-0"	3'-0"	3'-0"	3'-0"	3'-0"
	16"	3'-9"	3'-9"	3'-9"	3'-9"	3'-9"	3'-9"
	12"	5'-0"	5'-0"	5'-0"	5'-0"	5'-0"	5'-0"
50	24"	2'-1"	2'-1"	2'-1"	2'-1"	2'-1"	2'-1"
	20"	2'-6"	2'-6"	2'-6"	2'-6"	2'-6"	2'-6"
	16"	3'-2"	3'-2"	3'-2"	3'-2"	3'-2"	3'-2"
	12"	4'-2"	4'-2"	4'-2"	4'-2"	4'-2"	4'-2"
60	24"	1'-9"	1'-9"	1'-9"	1'-9"	1'-9"	1'-9"
	20"	2'-1"	2'-1"	2'-1"	2'-1"	2'-1"	2'-1"
	16"	2'-7"	2'-7"	2'-7"	2'-7"	2'-7"	2'-7"
	12"	3'-6"	3'-6"	3'-6"	3'-6"	3'-6"	3'-6"

TABLE 1.4

0.032"x2"x6.625" Rafter Detail L2 (Single Span)

Ground Snow Load (psf)	Rafter Spacing (in)	Wind Speed and Exposure Exp B 120	130	140	Exp C 105	110	115
10	24"	14'-10"	13'-11"	12'-11"	14'-7"	13'-10"	13'-3"
LIVE	20"	16'-2"	15'-2"	14'-0"	15'-10"	15'-1"	14'-5"
	16"	18'-0"	16'-9"	15'-7"	17'-7"	16'-9"	16'-0"
	12"	20'-8"	19'-1"	17'-8"	20'-0"	19'-1"	18'-3"
		Exposure C 120	130	140	150	160	170
10	24"	12'-8"	11'-8"	10'-10"	10'-10"	10'-1"	8'-10"
LIVE	20"	13'-10"	12'-9"	11'-10"	11'-10"	11'-0"	9'-8"
	16"	15'-4"	14'-1"	13'-1"	13'-1"	12'-2"	10'-9"
	12"	17'-5"	16'-1"	14'-11"	14'-11"	13'-10"	12'-2"
20	24"	7'-7"	7'-7"	7'-7"	7'-7"	7'-7"	7'-7"
LIVE	20"	9'-1"	9'-1"	9'-1"	9'-1"	9'-1"	9'-1"
	16"	11'-3"	11'-3"	11'-3"	11'-3"	11'-3"	10'-9"
	12"	14'-10"	14'-10"	14'-10"	14'-10"	13'-10"	12'-2"
25	24"	7'-3"	7'-3"	7'-3"	7'-3"	7'-3"	7'-3"
	20"	8'-8"	8'-8"	8'-8"	8'-8"	8'-8"	8'-8"
	16"	10'-9"	10'-9"	10'-9"	10'-9"	10'-9"	10'-9"
	12"	14'-3"	14'-3"	14'-3"	14'-3"	13'-10"	12'-2"
30	24"	6'-0"	6'-0"	6'-0"	6'-0"	6'-0"	6'-0"
	20"	7'-3"	7'-3"	7'-3"	7'-3"	7'-3"	7'-3"
	16"	9'-0"	9'-0"	9'-0"	9'-0"	9'-0"	9'-0"
	12"	11'-11"	11'-11"	11'-11"	11'-11"	11'-11"	11'-11"
36	24"	5'-1"	5'-1"	5'-1"	5'-1"	5'-1"	5'-1"
	20"	6'-1"	6'-1"	6'-1"	6'-1"	6'-1"	6'-1"
	16"	7'-7"	7'-7"	7'-7"	7'-7"	7'-7"	7'-7"
	12"	10'-1"	10'-1"	10'-1"	10'-1"	10'-1"	10'-1"
42	24"	4'-4"	4'-4"	4'-4"	4'-4"	4'-4"	4'-4"
	20"	5'-2"	5'-2"	5'-2"	5'-2"	5'-2"	5'-2"
	16"	6'-5"	6'-5"	6'-5"	6'-5"	6'-5"	6'-5"
	12"	8'-7"	8'-7"	8'-7"	8'-7"	8'-7"	8'-7"
50	24"	3'-7"	3'-7"	3'-7"	3'-7"	3'-7"	3'-7"
	20"	4'-4"	4'-4"	4'-4"	4'-4"	4'-4"	4'-4"
	16"	5'-5"	5'-5"	5'-5"	5'-5"	5'-5"	5'-5"
	12"	7'-3"	7'-3"	7'-3"	7'-3"	7'-3"	7'-3"
60	24"	3'-0"	3'-0"	3'-0"	3'-0"	3'-0"	3'-0"
	20"	3'-7"	3'-7"	3'-7"	3'-7"	3'-7"	3'-7"
	16"	4'-6"	4'-6"	4'-6"	4'-6"	4'-6"	4'-6"
	12"	6'-0"	6'-0"	6'-0"	6'-0"	6'-0"	6'-0"

TABLE 1.5

0.040"x2"x6.625" Rafter Detail L2 (Single Span)

Ground Snow Load (psf)	Rafter Spacing (in)	Wind Speed and Exposure Exp B 120	130	140	Exp C 105	110	115
10	24"	18'-4"	17'-7"	16'-3"	18'-4"	17'-7"	16'-9"
LIVE	20"	20'-0"	19'-2"	17'-9"	20'-0"	19'-2"	18'-3"
	16"	22'-3"	21'-3"	19'-8"	22'-3"	21'-3"	20'-3"
	12"	25'-5"	24'-3"	22'-5"	25'-5"	24'-2"	23'-1"
		Exposure C 120	130	140	150	160	170
10	24"	16'-1"	14'-10"	13'-9"	13'-9"	12'-9"	11'-3"
LIVE	20"	17'-6"	16'-1"	14'-11"	14'-11"	13'-11"	12'-3"
	16"	19'-5"	17'-10"	16'-7"	16'-7"	15'-5"	13'-7"
	12"	22'-1"	20'-4"	18'-10"	18'-10"	17'-7"	15'-5"
20	24"	11'-5"	11'-5"	11'-5"	11'-5"	11'-5"	11'-3"
LIVE	20"	13'-8"	13'-8"	13'-8"	13'-8"	13'-8"	12'-3"
	16"	15'-11"	15'-11"	15'-11"	15'-11"	15'-5"	13'-7"
	12"	18'-4"	18'-4"	18'-4"	18'-4"	17'-7"	15'-5"
25	24"	10'-10"	10'-10"	10'-10"	10'-10"	10'-10"	10'-10"
	20"	13'-0"	13'-0"	13'-0"	13'-0"	13'-0"	12'-3"
	16"	15'-7"	15'-7"	15'-7"	15'-7"	15'-5"	13'-7"
	12"	17'-11"	17'-11"	17'-11"	17'-11"	17'-7"	15'-5"
30	24"	9'-1"	9'-1"	9'-1"	9'-1"	9'-1"	9'-1"
	20"	10'-10"	10'-10"	10'-10"	10'-10"	10'-10"	10'-10"
	16"	13'-6"	13'-6"	13'-6"	13'-6"	13'-6"	13'-6"
	12"	16'-5"	16'-5"	16'-5"	16'-5"	16'-5"	15'-5"
36	24"	7'-8"	7'-8"	7'-8"	7'-8"	7'-8"	7'-8"
	20"	9'-2"	9'-2"	9'-2"	9'-2"	9'-2"	9'-2"
	16"	11'-5"	11'-5"	11'-5"	11'-5"	11'-5"	11'-5"
	12"	15'-1"	15'-1"	15'-1"	15'-1"	15'-1"	15'-1"
42	24"	6'-6"	6'-6"	6'-6"	6'-6"	6'-6"	6'-6"
	20"	7'-10"	7'-10"	7'-10"	7'-10"	7'-10"	7'-10"
	16"	9'-9"	9'-9"	9'-9"	9'-9"	9'-9"	9'-9"
	12"	12'-11"	12'-11"	12'-11"	12'-11"	12'-11"	12'-11"
50	24"	5'-6"	5'-6"	5'-6"	5'-6"	5'-6"	5'-6"
	20"	6'-7"	6'-7"	6'-7"	6'-7"	6'-7"	6'-7"
	16"	8'-2"	8'-2"	8'-2"	8'-2"	8'-2"	8'-2"
	12"	10'-10"	10'-10"	10'-10"	10'-10"	10'-10"	10'-10"
60	24"	4'-7"	4'-7"	4'-7"	4'-7"	4'-7"	4'-7"
	20"	5'-6"	5'-6"	5'-6"	5'-6"	5'-6"	5'-6"
	16"	6'-10"	6'-10"	6'-10"	6'-10"	6'-10"	6'-10"
	12"	9'-1"	9'-1"	9'-1"	9'-1"	9'-1"	9'-1"

TABLE 1.6

0.042"x3"x8" Rafter Detail L1 (Single Span)

Ground Snow Load (psf)	Rafter Spacing (in)	Wind Speed and Exposure Exp B 120	130	140	Exp C 105	110	115
10	36"	16'-5"	16'-4"	15'-1"	16'-5"	16'-3"	15'-7"
LIVE	32"	18'-4"	17'-3"	16'-0"	18'-1"	17'-3"	16'-5"
	24"	21'-1"	19'-8"	18'-3"	20'-8"	19'-8"	18'-10"
	16"	25'-6"	23'-8"	21'-11"	24'-10"	23'-7"	22'-7"
		Exposure C 120	130	140	150	160	170
10	36"	14'-11"	13'-9"	12'-9"	12'-9"	11'-10"	10'-6"
LIVE	32"	15'-9"	14'-6"	13'-5"	13'-5"	12'-7"	11'-1"
	24"	18'-0"	16'-7"	15'-4"	15'-4"	14'-4"	12'-7"
	16"	21'-7"	19'-10"	18'-5"	18'-5"	17'-2"	15'-1"
20	36"	8'-4"	8'-4"	8'-4"	8'-4"	8'-4"	8'-4"
LIVE	32"	9'-4"	9'-4"	9'-4"	9'-4"	9'-4"	9'-4"
	24"	12'-5"	12'-5"	12'-5"	12'-5"	12'-5"	12'-5"
	16"	18'-4"	18'-4"	18'-4"	18'-4"	17'-7"	15'-1"
25	36"	7'-11"	7'-11"	7'-11"	7'-11"	7'-11"	7'-11"
	32"	8'-11"	8'-11"	8'-11"	8'-11"	8'-11"	8'-11"
	24"	11'-10"	11'-10"	11'-10"	11'-10"	11'-10"	11'-10"
	16"	17'-6"	17'-6"	17'-6"	17'-6"	17'-2"	15'-1"
30	36"	6'-7"	6'-7"	6'-7"	6'-7"	6'-7"	6'-7"
	32"	7'-5"	7'-5"	7'-5"	7'-5"	7'-5"	7'-5"
	24"	9'-11"	9'-11"	9'-11"	9'-11"	9'-11"	9'-11"
	16"	14'-8"	14'-8"	14'-8"	14'-8"	14'-8"	14'-8"
36	36"	5'-7"	5'-7"	5'-7"	5'-7"	5'-7"	5'-7"
	32"	6'-3"	6'-3"	6'-3"	6'-3"	6'-3"	6'-3"
	24"	8'-4"	8'-4"	8'-4"	8'-4"	8'-4"	8'-4"
	16"	12'-5"	12'-5"	12'-5"	12'-5"	12'-5"	12'-5"
42	36"	4'-9"	4'-9"	4'-9"	4'-9"	4'-9"	4'-9"
	32"	5'-4"	5'-4"	5'-4"	5'-4"	5'-4"	5'-4"
	24"	7'-1"	7'-1"	7'-1"	7'-1"	7'-1"	7'-1"
	16"	10'-7"	10'-7"	10'-7"	10'-7"	10'-7"	10'-7"
50	36"	4'-0"	4'-0"	4'-0"	4'-0"	4'-0"	4'-0"
	32"	4'-6"	4'-6"	4'-6"	4'-6"	4'-6"	4'-6"
	24"	6'-0"	6'-0"	6'-0"	6'-0"	6'-0"	6'-0"
	16"	8'-11"	8'-11"	8'-11"	8'-11"	8'-11"	8'-11"
60	36"	3'-4"	3'-4"	3'-4"	3'-4"	3'-4"	3'-4"
	32"	3'-9"	3'-9"	3'-9"	3'-9"	3'-9"	3'-9"
	24"	5'-0"	5'-0"	5'-0"	5'-0"	5'-0"	5'-0"
	16"	7'-5"	7'-5"	7'-5"	7'-5"	7'-5"	7'-5"

TABLE 1.7

3"x3" Rafter @6" o/c Detail L4 (Multispan or Single)

Ground Snow Load (psf)	Rafter Gauge (in)	Wind Speed and Exposure, Exposure C 120	130	140	150	160	170
10	0.024"	12'-3"	12'-1"	11'-1"	11'-1"	10'-3"	8'-11"
LIVE	0.040"	21'-0"	20'-7"	19'-0"	19'-0"	17'-8"	15'-6"
20	0.024"	8'-3"	8'-3"	8'-3"	8'-3"	8'-3"	8'-3"
LIVE	0.040"	14'-9"	14'-9"	14'-9"	14'-9"	14'-9"	14'-9"
25	0.024"	8'-0"	8'-0"	8'-0"	8'-0"	8'-0"	8'-0"
	0.040"	14'-4"	14'-4"	14'-4"	14'-4"	14'-4"	14'-4"
30	0.024"	7'-1"	7'-1"	7'-1"	7'-1"	7'-1"	7'-1"
	0.040"	13'-0"	13'-0"	13'-0"	13'-0"	13'-0"	13'-0"
36	0.024"	6'-4"	6'-4"	6'-4"	6'-4"	6'-4"	6'-4"
	0.040"	11'-9"	11'-9"	11'-9"	11'-9"	11'-9"	11'-9"
42	0.024"	5'-9"	5'-9"	5'-9"	5'-9"	5'-9"	5'-9"
	0.040"	10'-9"	10'-9"	10'-9"	10'-9"	10'-9"	10'-9"
50	0.024"	5'-1"	5'-1"	5'-1"	5'-1"	5'-1"	5'-1"
	0.040"	9'-8"	9'-8"	9'-8"	9'-8"	9'-8"	9'-8"
60	0.024"	4'-5"	4'-5"	4'-5"	4'-5"	4'-5"	4'-5"
	0.040"	8'-8"	8'-8"	8'-8"	8'-8"	8'-8"	8'-8"

TABLE 1.8

Amerimax Exterior Home Products
28921 US Hwy 74
Romoland, CA 92585

Carl Putnam, P. E.
3441 Ivylink Place
Lynchburg, VA 24503
carlputnam@comcast.net

NOTE: RAFTERS MAY OVERHANG 25% OF THEIR CLEARSPAN

0.024"x2"x6.625" Rafter Detail L2 (Multispan)

Ground Snow Load	Rafter Spacing	Wind Speed and Exposure, Exposure C 120	130	140	150	160	170
10	24"	6'-10"	6'-10"	6'-4"	6'-4"	5'-5"	4'-2"
LIVE	20"	7'-10"	7'-10"	7'-10"	7'-10"	6'-7"	4'-11"
	16"	9'-3"	9'-3"	9'-3"	9'-3"	8'-5"	6'-2"
	12"	11'-2"	11'-2"	10'-10"	10'-10"	10'-1"	8'-5"
20	24"	3'-11"	3'-11"	3'-11"	3'-11"	3'-11"	3'-11"
LIVE	20"	4'-6"	4'-6"	4'-6"	4'-6"	4'-6"	4'-6"
	16"	5'-5"	5'-5"	5'-5"	5'-5"	5'-5"	5'-5"
	12"	6'-10"	6'-10"	6'-10"	6'-10"	6'-10"	6'-10"
25	24"	3'-9"	3'-9"	3'-9"	3'-9"	3'-9"	3'-9"
	20"	4'-4"	4'-4"	4'-4"	4'-4"	4'-4"	4'-4"
	16"	5'-3"	5'-3"	5'-3"	5'-3"	5'-3"	5'-3"
	12"	6'-7"	6'-7"	6'-7"	6'-7"	6'-7"	6'-7"
30	24"	3'-2"	3'-2"	3'-2"	3'-2"	3'-2"	3'-2"
	20"	3'-9"	3'-9"	3'-9"	3'-9"	3'-9"	3'-9"
	16"	4'-6"	4'-6"	4'-6"	4'-6"	4'-6"	4'-6"
	12"	5'-9"	5'-9"	5'-9"	5'-9"	5'-9"	5'-9"
36	24"	2'-8"	2'-8"	2'-8"	2'-8"	2'-8"	2'-8"
	20"	3'-2"	3'-2"	3'-2"	3'-2"	3'-2"	3'-2"
	16"	3'-11"	3'-11"	3'-11"	3'-11"	3'-11"	3'-11"
	12"	4'-11"	4'-11"	4'-11"	4'-11"	4'-11"	4'-11"
42	24"	2'-4"	2'-4"	2'-4"	2'-4"	2'-4"	2'-4"
	20"	2'-9"	2'-9"	2'-9"	2'-9"	2'-9"	2'-9"
	16"	3'-4"	3'-4"	3'-4"	3'-4"	3'-4"	3'-4"
	12"	4'-4"	4'-4"	4'-4"	4'-4"	4'-4"	4'-4"
50	24"	2'-0"	2'-0"	2'-0"	2'-0"	2'-0"	2'-0"
	20"	2'-4"	2'-4"	2'-4"	2'-4"	2'-4"	2'-4"
	16"	2'-10"	2'-10"	2'-10"	2'-10"	2'-10"	2'-10"
	12"	3'-9"	3'-9"	3'-9"	3'-9"	3'-9"	3'-9"
60	24"	1'-8"	1'-8"	1'-8"	1'-8"	1'-8"	1'-8"
	20"	2'-0"	2'-0"	2'-0"	2'-0"	2'-0"	2'-0"
	16"	2'-5"	2'-5"	2'-5"	2'-5"	2'-5"	2'-5"
	12"	3'-2"	3'-2"	3'-2"	3'-2"	3'-2"	3'-2"

TABLE 1.9

0.032"x2"x6.625" Rafter Detail L2 (Multispan)

Ground Snow Load	Rafter Spacing	Wind Speed and Exposure, Exposure C 120	130	140	150	160	170
10	24"	10'-4"	10'-4"	10'-4"	10'-4"	10'-1"	8'-10"
LIVE	20"	11'-8"	11'-8"	11'-8"	11'-8"	11'-0"	9'-8"
	16"	13'-6"	13'-6"	13'-1"	13'-1"	12'-2"	10'-9"
	12"	16'-2"	16'-1"	14'-11"	14'-11"	13'-10"	12'-2"
20	24"	6'-2"	6'-2"	6'-2"	6'-2"	6'-2"	6'-2"
LIVE	20"	7'-1"	7'-1"	7'-1"	7'-1"	7'-1"	7'-1"
	16"	8'-5"	8'-5"	8'-5"	8'-5"	8'-5"	8'-5"
	12"	10'-4"	10'-4"	10'-4"	10'-4"	10'-4"	10'-4"
25	24"	5'-11"	5'-11"	5'-11"	5'-11"	5'-11"	5'-11"
	20"	6'-10"	6'-10"	6'-10"	6'-10"	6'-10"	6'-10"
	16"	8'-1"	8'-1"	8'-1"	8'-1"	8'-1"	8'-1"
	12"	10'-0"	10'-0"	10'-0"	10'-0"	10'-0"	10'-0"
30	24"	5'-1"	5'-1"	5'-1"	5'-1"	5'-1"	5'-1"
	20"	5'-11"	5'-11"	5'-11"	5'-11"	5'-11"	5'-11"
	16"	7'-1"	7'-1"	7'-1"	7'-1"	7'-1"	7'-1"
	12"	8'-9"	8'-9"	8'-9"	8'-9"	8'-9"	8'-9"
36	24"	4'-5"	4'-5"	4'-5"	4'-5"	4'-5"	4'-5"
	20"	5'-2"	5'-2"	5'-2"	5'-2"	5'-2"	5'-2"
	16"	6'-2"	6'-2"	6'-2"	6'-2"	6'-2"	6'-2"
	12"	7'-9"	7'-9"	7'-9"	7'-9"	7'-9"	7'-9"
42	24"	3'-10"	3'-10"	3'-10"	3'-10"	3'-10"	3'-10"
	20"	4'-6"	4'-6"	4'-6"	4'-6"	4'-6"	4'-6"
	16"	5'-5"	5'-5"	5'-5"	5'-5"	5'-5"	5'-5"
	12"	6'-10"	6'-10"	6'-10"	6'-10"	6'-10"	6'-10"
50	24"	3'-3"	3'-3"	3'-3"	3'-3"	3'-3"	3'-3"
	20"	3'-10"	3'-10"	3'-10"	3'-10"	3'-10"	3'-10"
	16"	4'-8"	4'-8"	4'-8"	4'-8"	4'-8"	4'-8"
	12"	5'-11"	5'-11"	5'-11"	5'-11"	5'-11"	5'-11"
60	24"	2'-9"	2'-9"	2'-9"	2'-9"	2'-9"	2'-9"
	20"	3'-3"	3'-3"	3'-3"	3'-3"	3'-3"	3'-3"
	16"	4'-0"	4'-0"	4'-0"	4'-0"	4'-0"	4'-0"
	12"	5'-1"	5'-1"	5'-1"	5'-1"	5'-1"	5'-1"

TABLE 1.10

0.040"x2"x6.625" Rafter Detail L2 (Multispan)

Ground Snow Load	Rafter Spacing	Wind Speed and Exposure, Exposure C 120	130	140	150	160	170
10	24"	13'-11"	13'-11"	13'-9"	13'-9"	12'-9"	11'-3"
LIVE	20"	15'-7"	15'-7"	14'-11"	14'-11"	13'-11"	12'-3"
	16"	17'-10"	17'-10"	16'-7"	16'-7"	15'-5"	13'-7"
	12"	21'-1"	20'-4"	18'-10"	18'-10"	17'-7"	15'-5"
20	24"	8'-7"	8'-7"	8'-7"	8'-7"	8'-7"	8'-7"
LIVE	20"	9'-10"	9'-10"	9'-10"	9'-10"	9'-10"	9'-10"
	16"	11'-6"	11'-6"	11'-6"	11'-6"	11'-6"	11'-6"
	12"	13'-11"	13'-11"	13'-11"	13'-11"	13'-11"	13'-11"
25	24"	8'-3"	8'-3"	8'-3"	8'-3"	8'-3"	8'-3"
	20"	9'-6"	9'-6"	9'-6"	9'-6"	9'-6"	9'-6"
	16"	11'-1"	11'-1"	11'-1"	11'-1"	11'-1"	11'-1"
	12"	13'-6"	13'-6"	13'-6"	13'-6"	13'-6"	13'-6"
30	24"	7'-2"	7'-2"	7'-2"	7'-2"	7'-2"	7'-2"
	20"	8'-3"	8'-3"	8'-3"	8'-3"	8'-3"	8'-3"
	16"	9'-9"	9'-9"	9'-9"	9'-9"	9'-9"	9'-9"
	12"	11'-11"	11'-11"	11'-11"	11'-11"	11'-11"	11'-11"
36	24"	6'-3"	6'-3"	6'-3"	6'-3"	6'-3"	6'-3"
	20"	7'-3"	7'-3"	7'-3"	7'-3"	7'-3"	7'-3"
	16"	8'-7"	8'-7"	8'-7"	8'-7"	8'-7"	8'-7"
	12"	10'-7"	10'-7"	10'-7"	10'-7"	10'-7"	10'-7"
42	24"	5'-6"	5'-6"	5'-6"	5'-6"	5'-6"	5'-6"
	20"	6'-5"	6'-5"	6'-5"	6'-5"	6'-5"	6'-5"
	16"	7'-7"	7'-7"	7'-7"	7'-7"	7'-7"	7'-7"
	12"	9'-5"	9'-5"	9'-5"	9'-5"	9'-5"	9'-5"
50	24"	4'-9"	4'-9"	4'-9"	4'-9"	4'-9"	4'-9"
	20"	5'-6"	5'-6"	5'-6"	5'-6"	5'-6"	5'-6"
	16"	6'-8"	6'-8"	6'-8"	6'-8"	6'-8"	6'-8"
	12"	8'-3"	8'-3"	8'-3"	8'-3"	8'-3"	8'-3"
60	24"	4'-1"	4'-1"	4'-1"	4'-1"	4'-1"	4'-1"
	20"	4'-9"	4'-9"	4'-9"	4'-9"	4'-9"	4'-9"
	16"	5'-9"	5'-9"	5'-9"	5'-9"	5'-9"	5'-9"
	12"	7'-2"	7'-2"	7'-2"	7'-2"	7'-2"	7'-2"

TABLE 1.11

0.042"x3"x8" Rafter Detail L1 (Multispan)

Ground Snow Load	Rafter Spacing	Wind Speed and Exposure, Exposure C 120	130	140	150	160	170
10	36"	11'-9"	11'-9"	11'-9"	11'-9"	11'-9"	10'-6"
LIVE	32"	12'-9"	12'-9"	12'-9"	12'-9"	12'-7"	11'-1"
	24"	15'-5"	15'-5"	15'-4"	15'-4"	14'-4"	12'-7"
	16"	19'-10"	19'-10"	18'-5"	18'-5"	17'-2"	15'-1"
20	36"	6'-11"	6'-11"	6'-11"	6'-11"	6'-11"	6'-11"
LIVE	32"	7'-8"	7'-8"	7'-8"	7'-8"	7'-8"	7'-8"
	24"	9'-6"	9'-6"	9'-6"	9'-6"	9'-6"	9'-6"
	16"	12'-9"	12'-9"	12'-9"	12'-9"	12'-9"	12'-9"
25	36"	6'-8"	6'-8"	6'-8"	6'-8"	6'-8"	6'-8"
	32"	7'-4"	7'-4"	7'-4"	7'-4"	7'-4"	7'-4"
	24"	9'-2"	9'-2"	9'-2"	9'-2"	9'-2"	9'-2"
	16"	12'-4"	12'-4"	12'-4"	12'-4"	12'-4"	12'-4"
30	36"	5'-9"	5'-9"	5'-9"	5'-9"	5'-9"	5'-9"
	32"	6'-4"	6'-4"	6'-4"	6'-4"	6'-4"	6'-4"
	24"	8'-0"	8'-0"	8'-0"	8'-0"	8'-0"	8'-0"
	16"	10'-10"	10'-10"	10'-10"	10'-10"	10'-10"	10'-10"
36	36"	4'-11"	4'-11"	4'-11"	4'-11"	4'-11"	4'-11"
	32"	5'-5"	5'-5"	5'-5"	5'-5"	5'-5"	5'-5"
	24"	6'-11"	6'-11"	6'-11"	6'-11"	6'-11"	6'-11"
	16"	9'-6"	9'-6"	9'-6"	9'-6"	9'-6"	9'-6"
42	36"	4'-3"	4'-3"	4'-3"	4'-3"	4'-3"	4'-3"
	32"	4'-9"	4'-9"	4'-9"	4'-9"	4'-9"	4'-9"
	24"	6'-1"	6'-1"	6'-1"	6'-1"	6'-1"	6'-1"
	16"	8'-5"	8'-5"	8'-5"	8'-5"	8'-5"	8'-5"
50	36"	3'-8"	3'-8"	3'-8"	3'-8"	3'-8"	3'-8"
	32"	4'-1"	4'-1"	4'-1"	4'-1"	4'-1"	4'-1"
	24"	5'-3"	5'-3"	5'-3"	5'-3"	5'-3"	5'-3"
	16"	7'-4"	7'-4"	7'-4"	7'-4"	7'-4"	7'-4"
60	36"	3'-1"	3'-1"	3'-1"	3'-1"	3'-1"	3'-1"
	32"	3'-5"	3'-5"	3'-5"	3'-5"	3'-5"	3'-5"
	24"	4'-5"	4'-5"	4'-5"	4'-5"	4'-5"	4'-5"
	16"	6'-4"	6'-4"	6'-4"	6'-4"	6'-4"	6'-4"

TABLE 1.12

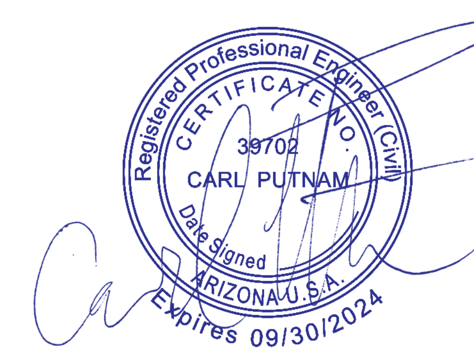

JAN 20 2023

SECTION 1.0 RAFTER SPANS FOR COMMERCIAL AND PATIO STRUCTURES USING DETAILS L31, L32 OR L33 OR DOUBLE HEADERS

0.024"x2"x6.625" Rafter DetailL2 (Single Span)

Ground Snow Load (psf)	Rafter Spacing (in)	Wind Speed and Exposure: Exp B 120	130	140	Exp C 105	110	115
10 LIVE	48"	10'-9"	10'-1"	9'-2"	10'-7"	10'-1"	9'-7"
	40"	11'-10"	11'-1"	10'-2"	11'-8"	11'-1"	10'-6"
	32"	13'-2"	12'-5"	11'-5"	13'-0"	12'-5"	11'-9"
	24"	15'-1"	14'-1"	13'-1"	14'-10"	14'-1"	13'-6"
		Exposure C 120	130	140	150	160	170
10 LIVE	48"	9'-2"	7'-8"	6'-4"	6'-4"	5'-5"	4'-2"
	40"	10'-0"	9'-2"	7'-10"	7'-10"	6'-7"	4'-11"
	32"	11'-3"	10'-3"	9'-5"	9'-5"	8'-5"	6'-2"
	24"	12'-11"	11'-10"	10'-10"	10'-10"	10'-1"	8'-5"
20 LIVE	48"	6'-6"	6'-6"	6'-4"	6'-4"	5'-5"	4'-2"
	40"	7'-10"	7'-10"	7'-10"	7'-10"	6'-7"	4'-11"
	32"	9'-4"	9'-4"	9'-4"	9'-4"	8'-5"	6'-2"
	24"	10'-9"	10'-9"	10'-9"	10'-9"	10'-1"	8'-5"
25	48"	6'-3"	6'-3"	6'-3"	6'-3"	5'-5"	4'-2"
	40"	7'-5"	7'-5"	7'-5"	7'-5"	6'-7"	4'-11"
	32"	9'-2"	9'-2"	9'-2"	9'-2"	8'-5"	6'-2"
	24"	10'-6"	10'-6"	10'-6"	10'-6"	10'-1"	8'-5"
30	48"	5'-2"	5'-2"	5'-2"	5'-2"	5'-2"	4'-2"
	40"	6'-3"	6'-3"	6'-3"	6'-3"	6'-3"	4'-11"
	32"	7'-9"	7'-9"	7'-9"	7'-9"	7'-9"	6'-2"
	24"	9'-8"	9'-8"	9'-8"	9'-8"	9'-8"	8'-5"
36	48"	4'-4"	4'-4"	4'-4"	4'-4"	4'-4"	4'-2"
	40"	5'-3"	5'-3"	5'-3"	5'-3"	5'-3"	4'-11"
	32"	6'-6"	6'-6"	6'-6"	6'-6"	6'-6"	6'-2"
	24"	8'-8"	8'-8"	8'-8"	8'-8"	8'-8"	8'-5"
42	48"	3'-8"	3'-8"	3'-8"	3'-8"	3'-8"	3'-8"
	40"	4'-5"	4'-5"	4'-5"	4'-5"	4'-5"	4'-5"
	32"	5'-7"	5'-7"	5'-7"	5'-7"	5'-7"	5'-7"
	24"	7'-5"	7'-5"	7'-5"	7'-5"	7'-5"	7'-5"
50	48"	3'-1"	3'-1"	3'-1"	3'-1"	3'-1"	3'-1"
	40"	3'-9"	3'-9"	3'-9"	3'-9"	3'-9"	3'-9"
	32"	4'-8"	4'-8"	4'-8"	4'-8"	4'-8"	4'-8"
	24"	6'-3"	6'-3"	6'-3"	6'-3"	6'-3"	6'-3"
60	48"	2'-7"	2'-7"	2'-7"	2'-7"	2'-7"	2'-7"
	40"	3'-1"	3'-1"	3'-1"	3'-1"	3'-1"	3'-1"
	32"	3'-11"	3'-11"	3'-11"	3'-11"	3'-11"	3'-11"
	24"	5'-2"	5'-2"	5'-2"	5'-2"	5'-2"	5'-2"

TABLE 1.13

0.032"x2"x6.625" Rafter Detail L2 (Single Span)

Ground Snow Load (psf)	Rafter Spacing (in)	Wind Speed and Exposure: Exp B 120	130	140	Exp C 105	110	115
10 LIVE	48"	14'-10"	13'-11"	12'-11"	14'-7"	13'-10"	13'-3"
	40"	16'-2"	15'-2"	14'-0"	15'-10"	15'-1"	14'-5"
	32"	18'-0"	16'-9"	15'-7"	17'-7"	16'-9"	16'-0"
	24"	20'-8"	19'-1"	17'-8"	20'-0"	19'-1"	18'-3"
		Exposure C 120	130	140	150	160	170
10 LIVE	48"	12'-8"	11'-8"	10'-10"	10'-10"	10'-1"	8'-10"
	40"	13'-10"	12'-9"	11'-10"	11'-10"	11'-0"	9'-8"
	32"	15'-4"	14'-1"	13'-1"	13'-1"	12'-2"	10'-9"
	24"	17'-5"	16'-1"	14'-11"	14'-11"	13'-10"	12'-2"
20 LIVE	48"	10'-7"	10'-7"	10'-7"	10'-7"	10'-1"	8'-10"
	40"	11'-6"	11'-6"	11'-6"	11'-6"	11'-0"	9'-8"
	32"	12'-10"	12'-10"	12'-10"	12'-10"	12'-2"	10'-9"
	24"	14'-10"	14'-10"	14'-10"	14'-10"	13'-10"	12'-2"
25	48"	10'-4"	10'-4"	10'-4"	10'-4"	10'-1"	8'-10"
	40"	11'-3"	11'-3"	11'-3"	11'-3"	11'-0"	9'-8"
	32"	12'-7"	12'-7"	12'-7"	12'-7"	12'-2"	10'-9"
	24"	14'-6"	14'-6"	14'-6"	14'-6"	13'-10"	12'-2"
30	48"	9'-5"	9'-5"	9'-5"	9'-5"	9'-5"	8'-10"
	40"	10'-4"	10'-4"	10'-4"	10'-4"	10'-4"	9'-8"
	32"	11'-6"	11'-6"	11'-6"	11'-6"	11'-6"	10'-9"
	24"	13'-3"	13'-3"	13'-3"	13'-3"	13'-3"	12'-2"
36	48"	8'-8"	8'-8"	8'-8"	8'-8"	8'-8"	8'-8"
	40"	9'-5"	9'-5"	9'-5"	9'-5"	9'-5"	9'-5"
	32"	10'-7"	10'-7"	10'-7"	10'-7"	10'-7"	10'-7"
	24"	12'-2"	12'-2"	12'-2"	12'-2"	12'-2"	12'-2"
42	48"	8'-0"	8'-0"	8'-0"	8'-0"	8'-0"	8'-0"
	40"	8'-9"	8'-9"	8'-9"	8'-9"	8'-9"	8'-9"
	32"	9'-9"	9'-9"	9'-9"	9'-9"	9'-9"	9'-9"
	24"	11'-3"	11'-3"	11'-3"	11'-3"	11'-3"	11'-3"
50	48"	7'-4"	7'-4"	7'-4"	7'-4"	7'-4"	7'-4"
	40"	8'-0"	8'-0"	8'-0"	8'-0"	8'-0"	8'-0"
	32"	8'-11"	8'-11"	8'-11"	8'-11"	8'-11"	8'-11"
	24"	10'-4"	10'-4"	10'-4"	10'-4"	10'-4"	10'-4"
60	48"	6'-3"	6'-3"	6'-3"	6'-3"	6'-3"	6'-3"
	40"	7'-4"	7'-4"	7'-4"	7'-4"	7'-4"	7'-4"
	32"	8'-2"	8'-2"	8'-2"	8'-2"	8'-2"	8'-2"
	24"	9'-5"	9'-5"	9'-5"	9'-5"	9'-5"	9'-5"

TABLE 1.14

0.040"x2"x6.625" Rafter Detail L2 (Single Span)

Ground Snow Load (psf)	Rafter Spacing (in)	Wind Speed and Exposure: Exp B 120	130	140	Exp C 105	110	115
10 LIVE	48"	18'-4"	17'-7"	16'-3"	18'-4"	17'-7"	16'-9"
	40"	20'-0"	19'-2"	17'-9"	20'-0"	19'-2"	18'-3"
	32"	22'-3"	21'-3"	19'-8"	22'-3"	21'-3"	20'-3"
	24"	25'-5"	24'-3"	22'-5"	25'-5"	24'-2"	23'-1"
		Exposure C 120	130	140	150	160	170
10 LIVE	48"	16'-1"	14'-10"	13'-9"	13'-9"	12'-9"	11'-3"
	40"	17'-6"	16'-1"	14'-11"	14'-11"	13'-11"	12'-3"
	32"	19'-5"	17'-10"	16'-7"	16'-7"	15'-5"	13'-7"
	24"	22'-1"	20'-4"	18'-10"	18'-10"	17'-7"	15'-5"
20 LIVE	48"	13'-1"	13'-1"	13'-1"	13'-1"	12'-9"	11'-3"
	40"	14'-4"	14'-4"	14'-4"	14'-4"	13'-11"	12'-3"
	32"	15'-11"	15'-11"	15'-11"	15'-11"	15'-5"	13'-7"
	24"	18'-4"	18'-4"	18'-4"	18'-4"	17'-7"	15'-5"
25	48"	12'-9"	12'-9"	12'-9"	12'-9"	12'-9"	11'-3"
	40"	14'-0"	14'-0"	14'-0"	14'-0"	13'-11"	12'-3"
	32"	15'-7"	15'-7"	15'-7"	15'-7"	15'-5"	13'-7"
	24"	17'-11"	17'-11"	17'-11"	17'-11"	17'-7"	15'-5"
30	48"	11'-8"	11'-8"	11'-8"	11'-8"	11'-8"	11'-3"
	40"	12'-9"	12'-9"	12'-9"	12'-9"	12'-9"	12'-3"
	32"	14'-3"	14'-3"	14'-3"	14'-3"	14'-3"	13'-7"
	24"	16'-5"	16'-5"	16'-5"	16'-5"	16'-5"	15'-5"
36	48"	10'-9"	10'-9"	10'-9"	10'-9"	10'-9"	10'-9"
	40"	11'-9"	11'-9"	11'-9"	11'-9"	11'-9"	11'-9"
	32"	13'-1"	13'-1"	13'-1"	13'-1"	13'-1"	13'-1"
	24"	15'-1"	15'-1"	15'-1"	15'-1"	15'-1"	15'-1"
42	48"	9'-11"	9'-11"	9'-11"	9'-11"	9'-11"	9'-11"
	40"	10'-10"	10'-10"	10'-10"	10'-10"	10'-10"	10'-10"
	32"	12'-1"	12'-1"	12'-1"	12'-1"	12'-1"	12'-1"
	24"	13'-11"	13'-11"	13'-11"	13'-11"	13'-11"	13'-11"
50	48"	9'-1"	9'-1"	9'-1"	9'-1"	9'-1"	9'-1"
	40"	9'-11"	9'-11"	9'-11"	9'-11"	9'-11"	9'-11"
	32"	11'-1"	11'-1"	11'-1"	11'-1"	11'-1"	11'-1"
	24"	12'-9"	12'-9"	12'-9"	12'-9"	12'-9"	12'-9"
60	48"	8'-3"	8'-3"	8'-3"	8'-3"	8'-3"	8'-3"
	40"	9'-1"	9'-1"	9'-1"	9'-1"	9'-1"	9'-1"
	32"	10'-1"	10'-1"	10'-1"	10'-1"	10'-1"	10'-1"
	24"	11'-8"	11'-8"	11'-8"	11'-8"	11'-8"	11'-8"

TABLE 1.15

0.042"x3"x8" Rafter Detail L1 (Single Span)

Ground Snow Load (psf)	Rafter Spacing (in)	Wind Speed and Exposure: Exp B 120	130	140	Exp C 105	110	115
10 LIVE	72"	17'-4"	16'-4"	15'-1"	17'-1"	16'-3"	15'-7"
	64"	18'-4"	17'-3"	16'-0"	18'-1"	17'-3"	16'-5"
	48"	21'-1"	19'-8"	18'-3"	20'-8"	19'-8"	18'-10"
	32"	25'-6"	23'-8"	21'-11"	24'-10"	23'-7"	22'-7"
		Exposure C 120	130	140	150	160	170
10 LIVE	72"	14'-11"	13'-9"	12'-9"	12'-9"	11'-10"	10'-6"
	64"	15'-9"	14'-6"	13'-5"	13'-5"	12'-7"	11'-1"
	48"	18'-0"	16'-7"	15'-4"	15'-4"	14'-4"	12'-7"
	32"	21'-7"	19'-10"	18'-5"	18'-5"	17'-2"	15'-1"
20 LIVE	72"	12'-4"	12'-4"	12'-4"	12'-4"	11'-10"	10'-6"
	64"	13'-1"	13'-1"	13'-1"	13'-1"	12'-7"	11'-1"
	48"	15'-1"	15'-1"	15'-1"	15'-1"	14'-4"	12'-7"
	32"	18'-4"	18'-4"	18'-4"	18'-4"	17'-2"	15'-1"
25	72"	12'-1"	12'-1"	12'-1"	12'-1"	11'-10"	10'-6"
	64"	12'-10"	12'-10"	12'-10"	12'-10"	12'-7"	11'-1"
	48"	14'-9"	14'-9"	14'-9"	14'-9"	14'-4"	12'-7"
	32"	17'-11"	17'-11"	17'-11"	17'-11"	17'-2"	15'-1"
30	72"	11'-0"	11'-0"	11'-0"	11'-0"	11'-0"	10'-6"
	64"	11'-8"	11'-8"	11'-8"	11'-8"	11'-8"	11'-1"
	48"	13'-6"	13'-6"	13'-6"	13'-6"	13'-6"	12'-7"
	32"	16'-5"	16'-5"	16'-5"	16'-5"	16'-5"	15'-1"
36	72"	10'-1"	10'-1"	10'-1"	10'-1"	10'-1"	10'-1"
	64"	10'-9"	10'-9"	10'-9"	10'-9"	10'-9"	10'-9"
	48"	12'-4"	12'-4"	12'-4"	12'-4"	12'-4"	12'-4"
	32"	15'-1"	15'-1"	15'-1"	15'-1"	15'-1"	15'-1"
42	72"	9'-4"	9'-4"	9'-4"	9'-4"	9'-4"	9'-4"
	64"	9'-11"	9'-11"	9'-11"	9'-11"	9'-11"	9'-11"
	48"	11'-5"	11'-5"	11'-5"	11'-5"	11'-5"	11'-5"
	32"	13'-11"	13'-11"	13'-11"	13'-11"	13'-11"	13'-11"
50	72"	8'-7"	8'-7"	8'-7"	8'-7"	8'-7"	8'-7"
	64"	9'-1"	9'-1"	9'-1"	9'-1"	9'-1"	9'-1"
	48"	10'-6"	10'-6"	10'-6"	10'-6"	10'-6"	10'-6"
	32"	12'-10"	12'-10"	12'-10"	12'-10"	12'-10"	12'-10"
60	72"	7'-10"	7'-10"	7'-10"	7'-10"	7'-10"	7'-10"
	64"	8'-4"	8'-4"	8'-4"	8'-4"	8'-4"	8'-4"
	48"	9'-7"	9'-7"	9'-7"	9'-7"	9'-7"	9'-7"
	32"	11'-8"	11'-8"	11'-8"	11'-8"	11'-8"	11'-8"

TABLE 1.16

Lattice Tubes Detail L3

Ground Snow Load (psf)	Lattice Tube Size	Wind Speed and Exposure, Exposure C: 120	130	140	150	160	170
10 LIVE	1.5"x1.5"	72"	72"	72"	72"	72"	71"
	2"x2"	72"	72"	72"	72"	72"	72"
	2"x3"	72"	72"	72"	72"	72"	72"
	3"x3"	72"	72"	72"	72"	72"	72"
20	1.5"x1.5"	70"	70"	70"	70"	70"	70"
	2"x3"	72"	72"	72"	72"	72"	72"
	3"x3"	72"	72"	72"	72"	72"	72"
25	1.5"x1.5"	68"	68"	68"	68"	68"	68"
	2"x2"	72"	72"	72"	72"	72"	72"
	2"x3"	72"	72"	72"	72"	72"	72"
	3"x3"	72"	72"	72"	72"	72"	72"
30	1.5"x1.5"	61"	61"	61"	61"	61"	61"
	2"x2"	72"	72"	72"	72"	72"	72"
	2"x3"	70"	70"	70"	70"	70"	70"
	3"x3"	72"	72"	72"	72"	72"	72"
36	1.5"x1.5"	55"	55"	55"	55"	55"	55"
	2"x2"	72"	72"	72"	72"	72"	72"
	2"x3"	63"	63"	63"	63"	63"	63"
	3"x3"	72"	72"	72"	72"	72"	72"
42	1.5"x1.5"	50"	50"	50"	50"	50"	50"
	2"x2"	66"	66"	66"	66"	66"	66"
	2"x3"	56"	56"	56"	56"	56"	56"
	3"x3"	69"	69"	69"	69"	69"	69"
50	1.5"x1.5"	44"	44"	44"	44"	44"	44"
	2"x2"	59"	59"	59"	59"	59"	59"
	2"x3"	50"	50"	50"	50"	50"	50"
	3"x3"	61"	61"	61"	61"	61"	61"
60	1.5"x1.5"	39"	39"	39"	39"	39"	39"
	2"x2"	52"	52"	52"	52"	52"	52"
	2"x3"	44"	44"	44"	44"	44"	44"
	3"x3"	53"	53"	53"	53"	53"	53"

TABLE 1.21

Amerimax Exterior Home Products
28921 US Hwy 74
Romoland, CA 92585

Carl Putnam, P. E.
3441 Ivylink Place
Lynchburg, VA 24503
carlputnam@comcast.net

NOTE: RAFTERS MAY OVERHANG 25% OF THEIR CLEARSPAN

0.024"x2"x6.625" Rafter Detail L2 (Multispan)

Ground Snow Load	Rafter Spacing	Wind Speed and Exposure, Exposure C: 120	130	140	150	160	170
10 LIVE	48"	8'-11"	7'-8"	6'-4"	6'-4"	5'-5"	4'-2"
	40"	10'-0"	9'-2"	7'-10"	7'-10"	6'-7"	4'-11"
	32"	11'-3"	10'-3"	9'-5"	9'-5"	8'-5"	6'-2"
	24"	12'-11"	11'-10"	10'-10"	10'-10"	10'-1"	8'-5"
20 LIVE	48"	5'-6"	5'-6"	5'-6"	5'-6"	5'-5"	4'-2"
	40"	6'-3"	6'-3"	6'-3"	6'-3"	6'-3"	4'-11"
	32"	7'-4"	7'-4"	7'-4"	7'-4"	7'-4"	6'-2"
	24"	8'-11"	8'-11"	8'-11"	8'-11"	8'-11"	8'-5"
25	48"	5'-3"	5'-3"	5'-3"	5'-3"	5'-3"	4'-2"
	40"	6'-1"	6'-1"	6'-1"	6'-1"	6'-1"	4'-11"
	32"	7'-1"	7'-1"	7'-1"	7'-1"	7'-1"	6'-2"
	24"	8'-7"	8'-7"	8'-7"	8'-7"	8'-7"	8'-5"
30	48"	4'-7"	4'-7"	4'-7"	4'-7"	4'-7"	4'-2"
	40"	5'-3"	5'-3"	5'-3"	5'-3"	5'-3"	4'-11"
	32"	6'-3"	6'-3"	6'-3"	6'-3"	6'-3"	6'-2"
	24"	7'-8"	7'-8"	7'-8"	7'-8"	7'-8"	7'-8"
36	48"	3'-11"	3'-11"	3'-11"	3'-11"	3'-11"	3'-11"
	40"	4'-7"	4'-7"	4'-7"	4'-7"	4'-7"	4'-7"
	32"	5'-6"	5'-6"	5'-6"	5'-6"	5'-6"	5'-6"
	24"	6'-9"	6'-9"	6'-9"	6'-9"	6'-9"	6'-9"
42	48"	3'-5"	3'-5"	3'-5"	3'-5"	3'-5"	3'-5"
	40"	4'-0"	4'-0"	4'-0"	4'-0"	4'-0"	4'-0"
	32"	4'-10"	4'-10"	4'-10"	4'-10"	4'-10"	4'-10"
	24"	6'-0"	6'-0"	6'-0"	6'-0"	6'-0"	6'-0"
50	48"	2'-11"	2'-11"	2'-11"	2'-11"	2'-11"	2'-11"
	40"	3'-5"	3'-5"	3'-5"	3'-5"	3'-5"	3'-5"
	32"	4'-2"	4'-2"	4'-2"	4'-2"	4'-2"	4'-2"
	24"	5'-3"	5'-3"	5'-3"	5'-3"	5'-3"	5'-3"
60	48"	2'-6"	2'-6"	2'-6"	2'-6"	2'-6"	2'-6"
	40"	2'-11"	2'-11"	2'-11"	2'-11"	2'-11"	2'-11"
	32"	3'-7"	3'-7"	3'-7"	3'-7"	3'-7"	3'-7"
	24"	4'-7"	4'-7"	4'-7"	4'-7"	4'-7"	4'-7"

TABLE 1.17

0.032"x2"x6.625" Rafter Detail L2 (Multispan)

Ground Snow Load	Rafter Spacing	Wind Speed and Exposure, Exposure C: 120	130	140	150	160	170
10 LIVE	48"	12'-8"	11'-8"	10'-10"	10'-10"	10'-1"	8'-10"
	40"	13'-10"	12'-9"	11'-10"	11'-10"	11'-0"	9'-8"
	32"	15'-4"	14'-1"	13'-1"	13'-1"	12'-2"	10'-9"
	24"	17'-5"	16'-1"	14'-11"	14'-11"	13'-10"	12'-2"
20 LIVE	48"	9'-0"	9'-0"	9'-0"	9'-0"	9'-0"	8'-10"
	40"	10'-0"	10'-0"	10'-0"	10'-0"	10'-0"	9'-8"
	32"	11'-4"	11'-4"	11'-4"	11'-4"	11'-4"	10'-9"
	24"	13'-4"	13'-4"	13'-4"	13'-4"	13'-4"	12'-2"
25	48"	8'-9"	8'-9"	8'-9"	8'-9"	8'-9"	8'-9"
	40"	9'-9"	9'-9"	9'-9"	9'-9"	9'-9"	9'-8"
	32"	11'-1"	11'-1"	11'-1"	11'-1"	11'-1"	10'-9"
	24"	12'-11"	12'-11"	12'-11"	12'-11"	12'-11"	12'-2"
30	48"	7'-10"	7'-10"	7'-10"	7'-10"	7'-10"	7'-10"
	40"	8'-9"	8'-9"	8'-9"	8'-9"	8'-9"	8'-9"
	32"	10'-0"	10'-0"	10'-0"	10'-0"	10'-0"	10'-0"
	24"	11'-9"	11'-9"	11'-9"	11'-9"	11'-9"	11'-9"
36	48"	7'-0"	7'-0"	7'-0"	7'-0"	7'-0"	7'-0"
	40"	7'-10"	7'-10"	7'-10"	7'-10"	7'-10"	7'-10"
	32"	9'-0"	9'-0"	9'-0"	9'-0"	9'-0"	9'-0"
	24"	10'-8"	10'-8"	10'-8"	10'-8"	10'-8"	10'-8"
42	48"	6'-4"	6'-4"	6'-4"	6'-4"	6'-4"	6'-4"
	40"	7'-1"	7'-1"	7'-1"	7'-1"	7'-1"	7'-1"
	32"	8'-2"	8'-2"	8'-2"	8'-2"	8'-2"	8'-2"
	24"	9'-8"	9'-8"	9'-8"	9'-8"	9'-8"	9'-8"
50	48"	5'-7"	5'-7"	5'-7"	5'-7"	5'-7"	5'-7"
	40"	6'-4"	6'-4"	6'-4"	6'-4"	6'-4"	6'-4"
	32"	7'-4"	7'-4"	7'-4"	7'-4"	7'-4"	7'-4"
	24"	8'-9"	8'-9"	8'-9"	8'-9"	8'-9"	8'-9"
60	48"	4'-11"	4'-11"	4'-11"	4'-11"	4'-11"	4'-11"
	40"	5'-7"	5'-7"	5'-7"	5'-7"	5'-7"	5'-7"
	32"	6'-6"	6'-6"	6'-6"	6'-6"	6'-6"	6'-6"
	24"	7'-10"	7'-10"	7'-10"	7'-10"	7'-10"	7'-10"

TABLE 1.18

0.040"x2"x6.625" Rafter Detail L2 (Multispan)

Ground Snow Load	Rafter Spacing	Wind Speed and Exposure, Exposure C: 120	130	140	150	160	170
10 LIVE	48"	16'-1"	14'-10"	13'-9"	13'-9"	12'-9"	11'-3"
	40"	17'-6"	16'-1"	14'-11"	14'-11"	13'-11"	12'-3"
	32"	19'-5"	17'-10"	16'-7"	16'-7"	15'-5"	13'-7"
	24"	22'-1"	20'-4"	18'-10"	18'-10"	17'-7"	15'-5"
20 LIVE	48"	12'-1"	12'-1"	12'-1"	12'-1"	12'-1"	11'-3"
	40"	13'-3"	13'-3"	13'-3"	13'-3"	13'-3"	12'-3"
	32"	14'-11"	14'-11"	14'-11"	14'-11"	14'-11"	13'-7"
	24"	17'-3"	17'-3"	17'-3"	17'-3"	17'-3"	15'-5"
25	48"	11'-9"	11'-9"	11'-9"	11'-9"	11'-9"	11'-3"
	40"	12'-11"	12'-11"	12'-11"	12'-11"	12'-11"	12'-3"
	32"	14'-6"	14'-6"	14'-6"	14'-6"	14'-6"	13'-7"
	24"	16'-10"	16'-10"	16'-10"	16'-10"	16'-10"	15'-5"
30	48"	10'-8"	10'-8"	10'-8"	10'-8"	10'-8"	10'-8"
	40"	11'-9"	11'-9"	11'-9"	11'-9"	11'-9"	11'-9"
	32"	13'-2"	13'-2"	13'-2"	13'-2"	13'-2"	13'-2"
	24"	15'-4"	15'-4"	15'-4"	15'-4"	15'-4"	15'-4"
36	48"	9'-8"	9'-8"	9'-8"	9'-8"	9'-8"	9'-8"
	40"	10'-8"	10'-8"	10'-8"	10'-8"	10'-8"	10'-8"
	32"	12'-1"	12'-1"	12'-1"	12'-1"	12'-1"	12'-1"
	24"	14'-0"	14'-0"	14'-0"	14'-0"	14'-0"	14'-0"
42	48"	8'-10"	8'-10"	8'-10"	8'-10"	8'-10"	8'-10"
	40"	9'-9"	9'-9"	9'-9"	9'-9"	9'-9"	9'-9"
	32"	11'-0"	11'-0"	11'-0"	11'-0"	11'-0"	11'-0"
	24"	12'-10"	12'-10"	12'-10"	12'-10"	12'-10"	12'-10"
50	48"	8'-0"	8'-0"	8'-0"	8'-0"	8'-0"	8'-0"
	40"	8'-10"	8'-10"	8'-10"	8'-10"	8'-10"	8'-10"
	32"	10'-0"	10'-0"	10'-0"	10'-0"	10'-0"	10'-0"
	24"	11'-9"	11'-9"	11'-9"	11'-9"	11'-9"	11'-9"
60	48"	7'-2"	7'-2"	7'-2"	7'-2"	7'-2"	7'-2"
	40"	8'-0"	8'-0"	8'-0"	8'-0"	8'-0"	8'-0"
	32"	9'-1"	9'-1"	9'-1"	9'-1"	9'-1"	9'-1"
	24"	10'-8"	10'-8"	10'-8"	10'-8"	10'-8"	10'-8"

TABLE 1.19

0.042"x3"x8" Rafter Detail L1 (Multispan)

Ground Snow Load	Rafter Spacing	Wind Speed and Exposure, Exposure C: 120	130	140	150	160	170
10 LIVE	72"	14'-11"	13'-9"	12'-9"	12'-9"	11'-10"	10'-6"
	64"	15'-9"	14'-6"	13'-5"	13'-5"	12'-7"	11'-1"
	48"	18'-0"	16'-7"	15'-4"	15'-4"	14'-4"	12'-7"
	32"	21'-7"	19'-10"	18'-5"	18'-5"	17'-2"	15'-1"
20 LIVE	72"	10'-8"	10'-8"	10'-8"	10'-8"	10'-8"	10'-6"
	64"	11'-5"	11'-5"	11'-5"	11'-5"	11'-5"	11'-1"
	48"	13'-5"	13'-5"	13'-5"	13'-5"	13'-5"	12'-7"
	32"	16'-8"	16'-8"	16'-8"	16'-8"	16'-8"	15'-1"
25	72"	10'-5"	10'-5"	10'-5"	10'-5"	10'-5"	10'-5"
	64"	11'-1"	11'-1"	11'-1"	11'-1"	11'-1"	11'-1"
	48"	13'-1"	13'-1"	13'-1"	13'-1"	13'-1"	12'-7"
	32"	16'-3"	16'-3"	16'-3"	16'-3"	16'-3"	15'-1"
30	72"	9'-4"	9'-4"	9'-4"	9'-4"	9'-4"	9'-4"
	64"	10'-0"	10'-0"	10'-0"	10'-0"	10'-0"	10'-0"
	48"	11'-10"	11'-10"	11'-10"	11'-10"	11'-10"	11'-10"
	32"	14'-9"	14'-9"	14'-9"	14'-9"	14'-9"	14'-9"
36	72"	8'-4"	8'-4"	8'-4"	8'-4"	8'-4"	8'-4"
	64"	9'-0"	9'-0"	9'-0"	9'-0"	9'-0"	9'-0"
	48"	10'-8"	10'-8"	10'-8"	10'-8"	10'-8"	10'-8"
	32"	13'-5"	13'-5"	13'-5"	13'-5"	13'-5"	13'-5"
42	72"	7'-7"	7'-7"	7'-7"	7'-7"	7'-7"	7'-7"
	64"	8'-2"	8'-2"	8'-2"	8'-2"	8'-2"	8'-2"
	48"	9'-9"	9'-9"	9'-9"	9'-9"	9'-9"	9'-9"
	32"	12'-3"	12'-3"	12'-3"	12'-3"	12'-3"	12'-3"
50	72"	6'-9"	6'-9"	6'-9"	6'-9"	6'-9"	6'-9"
	64"	7'-3"	7'-3"	7'-3"	7'-3"	7'-3"	7'-3"
	48"	8'-9"	8'-9"	8'-9"	8'-9"	8'-9"	8'-9"
	32"	11'-1"	11'-1"	11'-1"	11'-1"	11'-1"	11'-1"
60	72"	5'-11"	5'-11"	5'-11"	5'-11"	5'-11"	5'-11"
	64"	6'-5"	6'-5"	6'-5"	6'-5"	6'-5"	6'-5"
	48"	7'-10"	7'-10"	7'-10"	7'-10"	7'-10"	7'-10"
	32"	10'-0"	10'-0"	10'-0"	10'-0"	10'-0"	10'-0"

TABLE 1.20

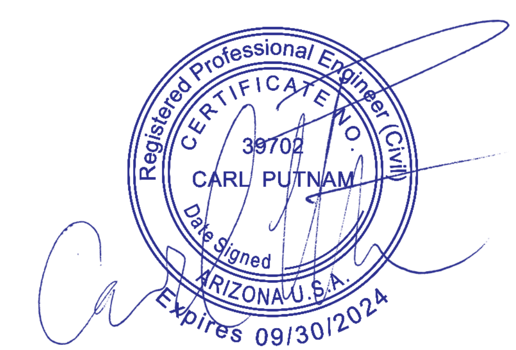

JAN 20 2023

Number of Screws Attaching Rafters Directly to Headers for Detail L30 **Table 1.22**

Number of #14 SMS/SDS	Connection Description	Rafter Spacing (in)	Exposure B Wind Speeds (mph) for Attached Structures									Exposure C Wind Speeds (mph) for Attached Structures								
			95	100	105	110	115	120	130	140	150	95	100	105	110	115	120	130	140	150
			or Wind Speeds (mph) for Freestanding Structures									or Wind Speeds (mph) for Freestanding Structures								
			115	120	130	130	140	140	160	170	170	110	120	120	130	130	140	150	160	170
			Maximum Trib Width on Header																	
2	All Rafters on Double 0.040"x2"x6.6" Headers	36"	9.5'	8.5'	7.5'	7'	6.5'	5.5'	5'	4'	3.5'	6.5'	6'	5.5'	5'	4.5'	4'	3.5'	3'	2.5'
(one per	All Rafters on Double 0.040"x2"x6.6" Headers	32"	11'	9.5'	8.5'	8'	7'	6.5'	5.5'	4.5'	4'	7.5'	6.5'	6'	5.5'	5'	4.5'	3.5'	3'	2.5'
header)	All Rafters on Double 0.040"x2"x6.6" Headers	24"	14.5'	13'	11.5'	10.5'	9.5'	8.5'	7.5'	6'	5.5'	10'	9'	8'	7.5'	6.5'	6'	5'	4.5'	3.5'
	All Rafters on Double 0.040"x2"x6.6" Headers	20"	17.5'	15.5'	14'	12.5'	11.5'	10.5'	9'	7.5'	6.5'	12'	11'	9.5'	9'	8'	7.5'	6'	5'	4.5'
	All Rafters on Double 0.040"x2"x6.6" Headers	16"	21'	19.5'	17.5'	16'	14.5'	13'	11'	9.5'	8'	15'	13.5'	12'	11'	10'	9'	7.5'	6.5'	5.5'
	All Rafters on Double 0.040"x2"x6.6" Headers	12"	21'	21'	21'	21'	19.5'	17.5'	15'	12.5'	11'	20.5'	18'	16.5'	15'	13.5'	12.5'	10.5'	9'	7.5'
	All 3"x3" Rafters on 0.040"x2"x6.6" Headers	6"	21'	21'	21'	21'	21'	21'	21'	21'	21'	21'	21'	21'	21'	21'	21'	21'	18'	15.5'
4	All Rafters on Double 0.040"x2"x6.6" Headers	36"	19.5'	17.5'	15.5'	14'	13'	11.5'	10'	8.5'	7'	13.5'	12'	11'	10'	9'	8'	7'	6'	5'
(two per	All Rafters on Double 0.040"x2"x6.6" Headers	32"	21'	19.5'	17.5'	16'	14.5'	13'	11'	9.5'	8'	15'	13.5'	12'	11'	10'	9'	7.5'	6.5'	5.5'
header)	All Rafters on Double 0.040"x2"x6.6" Headers	24"	21'	21'	21'	21'	19.5'	17.5'	15'	12.5'	11'	20.5'	18'	16.5'	15'	13.5'	12.5'	10.5'	9'	7.5'
	All Rafters on Double 0.040"x2"x6.6" Headers	20"	21'	21'	21'	21'	21'	21'	18'	15.5'	13'	21'	21'	19.5'	18'	16'	15'	12.5'	10.5'	9'
	All Rafters on Double 0.040"x2"x6.6" Headers	16"	21'	21'	21'	21'	21'	21'	21'	19'	16.5'	21'	21'	21'	21'	20.5'	18.5'	15.5'	13.5'	11.5'
	All Rafters on Double 0.040"x2"x6.6" Headers	12"	21'	21'	21'	21'	21'	21'	21'	21'	21'	21'	21'	21'	21'	21'	21'	21'	18'	15.5'
6	All Rafters on Double 0.040"x2"x6.6" Headers	36"	21'	21'	21'	21'	19.5'	17.5'	15'	12.5'	11'	20.5'	18'	16.5'	15'	13.5'	12.5'	10.5'	9'	7.5'
(three per	All Rafters on Double 0.040"x2"x6.6" Headers	32"	21'	21'	21'	21'	21'	20'	16.5'	14.5'	12.5'	21'	20.5'	18.5'	16.5'	15'	14'	11.5'	10'	8.5'
header)	All Rafters on Double 0.040"x2"x6.6" Headers	24"	21'	21'	21'	21'	21'	21'	21'	19'	16.5'	21'	21'	21'	21'	20.5'	18.5'	15.5'	13.5'	11.5'
	All Rafters on Double 0.040"x2"x6.6" Headers	12"	21'	21'	21'	21'	21'	21'	21'	21'	21'	21'	21'	21'	21'	21'	21'	21'	21'	21'
	All 3"x3" Rafters on 0.040"x2"x6.6" Headers	6"	21'	21'	21'	21'	21'	21'	21'	21'	21'	21'	21'	21'	21'	21'	21'	21'	21'	21'
1	All Rafters on 0.042"x3x8 Header	36"	5'	4.5'	4'	3.5'	3'	3'	2.5'	2'	1.5'	3.5'	3'	2.5'	2.5'	2'	2'	1.5'	1.5'	1'
	All Rafters on 0.042"x3x8 Header	32"	5.5'	5'	4.5'	4'	3.5'	3.5'	2.5'	2.5'	2'	4'	3.5'	3'	2.5'	2.5'	2'	2'	1.5'	1.5'
	All Rafters on 0.042"x3x8 Header	24"	7.5'	6.5'	6'	5.5'	5'	4.5'	3.5'	3'	2.5'	5'	4.5'	4'	3.5'	3.5'	3'	2.5'	2'	2'
	All Rafters on 0.042"x3x8 Header	20"	9'	8'	7'	6.5'	6'	5.5'	4.5'	4'	3.5'	6'	5.5'	5'	4.5'	4'	3.5'	3'	2.5'	2'
	All Rafters on 0.042"x3x8 Header	16"	11.5'	10'	9'	8'	7.5'	7'	5.5'	5'	4'	8'	7'	6.5'	5.5'	5'	4.5'	4'	3.5'	3'
	All Rafters on 0.042"x3x8 Header	12"	15.5'	13.5'	12'	11'	10'	9'	7.5'	6.5'	5.5'	10.5'	9.5'	8.5'	7.5'	7'	6.5'	5.5'	4.5'	4'
	All 3"x3" Rafters on 0.042"x3"x8" Header	6"	21'	21'	21'	21'	20.5'	18.5'	15.5'	13.5'	11.5'	21'	19'	17'	15.5'	14'	13'	11'	9.5'	8'
2	All Rafters on 0.042"x3x8 Header	36"	10'	9'	8'	7.5'	6.5'	6'	5'	4.5'	3.5'	7'	6'	5.5'	5'	4.5'	4'	3.5'	3'	2.5'
	All Rafters on 0.042"x3x8 Header	32"	11.5'	10'	9'	8'	7.5'	7'	5.5'	5'	4'	8'	7'	6.5'	5.5'	5'	4.5'	4'	3.5'	3'
	All Rafters on 0.042"x3x8 Header	24"	15.5'	13.5'	12'	11'	10'	9'	7.5'	6.5'	5.5'	10.5'	9.5'	8.5'	7.5'	7'	6.5'	5.5'	4.5'	4'
	All Rafters on 0.042"x3x8 Header	20"	18.5'	16.5'	14.5'	13.5'	12'	11'	9'	8'	7'	12.5'	11.5'	10'	9'	8.5'	7.5'	6.5'	5.5'	4.5'
	All Rafters on 0.042"x3x8 Header	16"	21'	20.5'	18.5'	16.5'	15'	14'	11.5'	10'	8.5'	16'	14'	13'	11.5'	10.5'	9.5'	8'	7'	6'
	All Rafters on 0.042"x3x8 Header	12"	21'	21'	21'	21'	20.5'	18.5'	15.5'	13.5'	11.5'	21'	19'	17'	15.5'	14'	13'	11'	9.5'	8'
	All 3"x3" Rafters on 0.042"x3"x8" Header	6"	21'	21'	21'	21'	21'	21'	21'	21'	21'	21'	21'	21'	21'	21'	21'	21'	19'	16.5'
3	All Rafters on 0.042"x3x8 Header	36"	15.5'	13.5'	12'	11'	10'	9'	7.5'	6.5'	5.5'	10.5'	9.5'	8.5'	7.5'	7'	6.5'	5.5'	4.5'	4'
	All Rafters on 0.042"x3x8 Header	32"	17'	15.5'	14'	12.5'	11.5'	10.5'	8.5'	7.5'	6.5'	12'	10.5'	9.5'	8.5'	8'	7'	6'	5'	4.5'
	All Rafters on 0.042"x3x8 Header	24"	21'	20.5'	18.5'	16.5'	15'	14'	11.5'	10'	8.5'	16'	14'	13'	11.5'	10.5'	9.5'	8'	7'	6'
	All Rafters on 0.042"x3x8 Header	20"	21'	21'	21'	20'	18'	16.5'	14'	12'	10.5'	19'	17'	15.5'	14'	12.5'	11.5'	10'	8.5'	7'
	All Rafters on 0.042"x3x8 Header	16"	21'	21'	21'	21'	21'	21'	17.5'	15'	13'	21'	21'	19.5'	17.5'	16'	14.5'	12.5'	10.5'	9'
	All Rafters on 0.042"x3x8 Header	12"	21'	21'	21'	21'	21'	21'	21'	20'	17.5'	21'	21'	21'	21'	21'	19.5'	16.5'	14'	12'
1	0.024"x2x6.625" on Steel Insert	24"	8'	7'	6.5'	6'	5.5'	5'	4'	3.5'	3'	5.5'	5'	4.5'	4'	3.5'	3.5'	2.5'	2.5'	2'
	0.024"x2x6.625" on Steel Insert	20"	10'	8.5'	8'	7'	6.5'	6'	5'	4'	3.5'	6.5'	6'	5.5'	5'	4.5'	4'	3.5'	3'	2.5'
	0.024"x2x6.625" on Steel Insert	16"	12.5'	11'	10'	9'	8'	7.5'	6'	5'	4.5'	8.5'	7.5'	7'	6'	5.5'	5'	4'	3.5'	3'
	0.024"x2x6.625" on Steel Insert	12"	16.5'	14.5'	13'	12'	11'	10'	8.5'	7'	6'	11.5'	10'	9'	8.5'	7.5'	7'	5.5'	5'	4'
	0.024"x3x3" on Steel Insert	6"	21'	21'	21'	21'	21'	20'	17'	14.5'	12.5'	21'	20.5'	18.5'	17'	15'	14'	11.5'	10'	8.5'
2	0.024"x2x6.625" on Steel Insert	24"	16.5'	14.5'	13'	12'	11'	10'	8.5'	7'	6'	11.5'	10'	9'	8.5'	7.5'	7'	5.5'	5'	4'
	0.024"x2x6.625" on Steel Insert	20"	20'	17.5'	16'	14.5'	13'	12'	10'	8.5'	7.5'	13.5'	12'	11'	10'	9'	8.5'	7'	6'	5'
	0.024"x2x6.625" on Steel Insert	16"	21'	21'	20'	18'	16.5'	15'	12.5'	10.5'	9'	17'	15.5'	14'	12.5'	11.5'	10.5'	8.5'	7.5'	6.5'
	0.024"x2x6.625" on Steel Insert	12"	21'	21'	21'	21'	21'	20'	17'	14.5'	12.5'	21'	20.5'	18.5'	17'	15'	14'	11.5'	10'	8.5'
	0.024"x3x3" on Steel Insert	6"	21'	21'	21'	21'	21'	21'	21'	21'	21'	21'	21'	21'	21'	21'	21'	21'	20.5'	17.5'
3	0.024"x2x6.625" on Steel Insert	24"	21'	21'	20'	18'	16.5'	15'	12.5'	10.5'	9'	17'	15.5'	14'	12.5'	11.5'	10.5'	8.5'	7.5'	6.5'
	0.024"x2x6.625" on Steel Insert	20"	21'	21'	21'	21'	19.5'	18'	15'	13'	11'	20.5'	18.5'	16.5'	15'	13.5'	12.5'	10.5'	9'	8'
	0.024"x2x6.625" on Steel Insert	16"	21'	21'	21'	21'	21'	21'	19'	16'	14'	21'	21'	21'	19'	17'	15.5'	13'	11.5'	10'
	0.024"x2x6.625" on Steel Insert	12"	21'	21'	21'	21'	21'	21'	21'	21'	18.5'	21'	21'	21'	21'	21'	21'	17.5'	15'	13'
1	0.032"x2"x6.625" on Steel Insert	24"	11'	9.5'	8.5'	8'	7'	6.5'	5.5'	4.5'	4'	7.5'	6.5'	6'	5.5'	5'	4.5'	3.5'	3'	2.5'
	0.032"x2"x6.625" on Steel Insert	20"	13'	11.5'	10.5'	9.5'	8.5'	8'	6.5'	5.5'	5'	9'	8'	7.5'	6.5'	6'	5.5'	4.5'	4'	3.5'
	0.032"x2"x6.625" on Steel Insert	16"	16.5'	14.5'	13'	12'	11'	10'	8.5'	7'	6'	11.5'	10'	9'	8.5'	7.5'	7'	5.5'	5'	4'
	0.032"x2"x6.625" on Steel Insert	12"	21'	19.5'	17.5'	16'	14.5'	13'	11'	9.5'	8'	15'	13.5'	12.5'	11'	10'	9'	7.5'	6.5'	5.5'
2	0.032"x2"x6.625" on Steel Insert	24"	21'	19.5'	17.5'	16'	14.5'	13'	11'	9.5'	8'	15'	13.5'	12.5'	11'	10'	9'	7.5'	6.5'	5.5'
	0.032"x2"x6.625" on Steel Insert	20"	21'	21'	21'	19'	17.5'	16'	13.5'	11.5'	10'	18.5'	16.5'	15'	13.5'	12'	11'	9.5'	8'	7'
	0.032"x2"x6.625" on Steel Insert	16"	21'	21'	21'	21'	21'	20'	17'	14.5'	12.5'	21'	20.5'	18.5'	17'	15'	14'	11.5'	10'	8.5'
	0.032"x2"x6.625" on Steel Insert	12"	21'	21'	21'	21'	21'	21'	21'	19'	16.5'	21'	21'	21'	21'	20.5'	18.5'	15.5'	13.5'	11.5'
3	0.032"x2"x6.625" on Steel Insert	24"	21'	21'	21'	21'	21'	20'	17'	14.5'	12.5'	21'	20.5'	18.5'	17'	15'	14'	11.5'	10'	8.5'
	0.032"x2"x6.625" on Steel Insert	20"	21'	21'	21'	21'	21'	21'	20'	17.5'	15'	21'	21'	21'	20'	18.5'	17'	14'	12'	10.5'
	0.032"x2"x6.625" on Steel Insert	16"	21'	21'	21'	21'	21'	21'	21'	21'	18.5'	21'	21'	21'	21'	21'	21'	17.5'	15'	13'
	0.032"x2"x6.625" on Steel Insert	12"	21'	21'	21'	21'	21'	21'	21'	21'	21'	21'	21'	21'	21'	21'	21'	21'	20.5'	17.5'
1	0.040"x2"x6.625" on Steel Insert	24"	13.5'	12'	11'	10'	9'	8'	7'	6'	5'	9.5'	8.5'	7.5'	7'	6'	5.5'	4.5'	4'	3.5'
	0.040"x2"x6.625" on Steel Insert	20	16.5'	14.5'	13'	12'	11'	10'	8.5'	7'	6'	11.5'	10'	9'	8.5'	7.5'	7'	5.5'	5'	4'
	0.040"x2"x6.625" on Steel Insert	16	20.5'	18.5'	16.5'	15'	13.5'	12.5'	10.5'	9'	7.5'	14.5'	13'	11.5'	10.5'	9.5'	8.5'	7'	6'	5.5'
	0.040"x2"x6.625" on Steel Insert	12	21'	21'	21'	20'	18'	16.5'	14'	12'	10.5'	19'	17'	15.5'	14'	12.5'	11.5'	9.5'	8.5'	7'
	0.040"x3"x3" on Steel Insert	6"	21'	21'	21'	21'	21'	21'	21'	21'	21'	21'	21'	21'	21'	21'	21'	19.5'	17'	14.5'
2	0.040"x2"x6.625" on Steel Insert	24"	21'	21'	21'	20'	18'	16.5'	14'	12'	10.5'	19'	17'	15.5'	14'	12.5'	11.5'	9.5'	8.5'	7'
	0.040"x2"x6.625" on Steel Insert	20	21'	21'	21'	21'	21'	20'	17'	14.5'	12.5'	21'	20.5'	18.5'	17'	15'	14'	11.5'	10'	8.5'
	0.040"x2"x6.625" on Steel Insert	16	21'	21'	21'	21'	21'	21'	21'	18'	15.5'	21'	21'	21'	21'	19'	17.5'	14.5'	12.5'	11'
	0.040"x2"x6.625" on Steel Insert	12	21'	21'	21'	21'	21'	21'	21'	21'	21'	21'	21'	21'	21'	21'	21'	19.5'	17'	14.5'
1	0.042"x3"x8" on Steel Insert	36"	9.5'	8.5'	7.5'	7'	6'	5.5'	4.5'	4'	3.5'	6.5'	6'	5'	4.5'	4.5'	4'	3'	3'	2.5'
	0.042"x3"x8" on Steel Insert	32"	10.5'	9.5'	8.5'	7.5'	7'	6.5'	5.5'	4.5'	4'	7.5'	6.5'	6'	5.5'	5'	4.5'	3.5'	3'	2.5'
	0.042"x3"x8" on Steel Insert	24"	14.5'	13'	11.5'	10.5'	9.5'	8.5'	7'	6'	5.5'	10'	9'	8'	7'	6.5'	6'	5'	4.5'	3.5'
	0.042"x3"x8" on Steel Insert	16"	21'	19.5'	17.5'	15.5'	14.5'	13'	11'	9.5'	8'	15'	13.5'	12'	11'	10'	9'	7.5'	6.5'	5.5'
2	0.042"x3"x8" on Steel Insert	36"	19.5'	17'	15.5'	14'	12.5'	11.5'	9.5'	8.5'	7'	13.5'	12'	10.5'	9.5'	9'	8'	6.5'	6'	5'
	0.042"x3"x8" on Steel Insert	32	21'	19.5'	17.5'	15.5'	14.5'	13'	11'	9.5'	8'	15'	13.5'	12'	11'	10'	9'	7.5'	6.5'	5.5'
	0.042"x3"x8" on Steel Insert	24	21'	21'	21'	21'	19'	17.5'	14.5'	12.5'	11'	20'	18'	16'	14.5'	13.5'	12'	10'	9'	7.5'
	0.042"x3"x8" on Steel Insert	16	21'	21'	21'	21'	21'	21'	21'	19'	16.5'	21'	21'	21'	21'	20'	18.5'	15.5'	13.5'	11.5'
3	0.042"x3"x8" on Steel Insert	36	21'	21'	21'	21'	19'	17.5'	14.5'	12.5'	11'	20'	18'	16'	14.5'	13.5'	12'	10'	9'	7.5'
	0.042"x3"x8" on Steel Insert	32	21'	21'	21'	21'	21'	19.5'	16.5'	14'	12'	21'	20'	18'	16.5'	15'	13.5'	11.5'	10'	8.5'
	0.042"x3"x8" on Steel Insert	24	21'	21'	21'	21'	21'	21'	21'	19'	16.5'	21'	21'	21'	21'	20'	18.5'	15.5'	13.5'	11.5'
	0.042"x3"x8" on Steel Insert	16	21'	21'	21'	21'	21'	21'	21'	21'	21'	21'	21'	21'	21'	21'	21'	21'	20'	17.5'

Amerimax Exterior Home Products
28921 US Hwy 74
Romoland, CA 92585

Carl Putnam, P. E.
3441 Ivylink Place
Lynchburg, VA 24503
carlputnam@comcast.net

Registered Professional Engineer (Civil)
CERTIFICATE NO. 39702
CARL PUTNAM
Date Signed
ARIZONA, U.S.A.
Exp. Date 09/30/2024

JAN 20 2023

SECTION 2.0 POST SPACING, POST TYPE AND FOOTING SIZE FOR LATTICE COVERS

Roof Solidity: 60%

Ground Snow Load: 10 psf **Live Load: 10 psf** **Wind Speed: 95 MPH EXPOSURE B** **Seismic Ss= 150%** **Seismic Design Category D** **Structures are Attached to Existing Building**

Table 2.1a (cubic footing "d"; Constrained Footing (in) by Max Post Length)

Header	Detail	trib 3'	Min Post Type	Uplift Footing (in)	8'	10'	12'	trib 3.5'	Min Post Type	Uplift Footing (in)	8'	10'	12'	trib 4'	Min Post Type	Uplift Footing (in)	8'	10'	12'	trib 4.5'	Min Post Type	Uplift Footing (in)	8'	10'	12'	trib 5'	Min Post Type	Uplift Footing (in)	8'	10'	12'
On Slab	On Slab	22'-8"	A1					19'-5"	A1					17'-0"	A1					15'-1"	A1					13'-7"	A1				
0.042"x3"x8"	L1	14'-11"	A1	17	18	19	20	13'-8"	A1	17	18	19	20	12'-7"	A1	18	18	19	20	12'-0"	A1	18	18	20	21	11'-3"	A1	18	19	20	21
Double 3"x8"	L1/L12	21'-8"	A1	19	19	21	21	19'-10"	A1	20	20	21	22	18'-5"	A1	20	20	21	22	17'-8"	A1	21	20	22	23	16'-7"	A2	21	21	22	23
Double 2"x6.625"	L2/L12	19'-2"	A1	19	19	20	21	17'-7"	A1	19	19	20	21	16'-4"	A1	19	19	21	22	15'-8"	A1	20	20	21	22	14'-9"	A1	20	20	21	22
16 G Steel C	L18	26'-4"	A1	21	20	22	23	23'-9"	A2	21	21	22	23	21'-9"	A2	21	21	22	23	20'-7"	A2	22	21	22	24	19'-1"	A3	22	21	23	24
14 G Steel C	L18	31'-4"	A2	22	21	23	24	28'-4"	A3	22	22	23	24	26'-0"	A3	23	22	23	24	24'-8"	A3	23	22	24	25	22'-11"	B	23	22	24	25
12 G Steel C	L18	40'-0"	C	24	23	24	25	40'-0"	D	25	24	25	26	37'-4"	D	25	24	25	27	35'-7"	E	26	24	26	27	33'-3"	E	26	25	26	27
Double 16 G Steel C	L18/L8	40'-0"	C	24	23	24	25	38'-9"	D	25	23	25	26	36'-1"	D	25	24	25	26	34'-7"	E	26	24	26	27	32'-8"	E	26	25	26	27
Double 14 G Steel C	L18/L8	40'-0"	C	24	23	24	25	40'-0"	D	25	24	25	26	40'-0"	E	26	24	26	27	39'-8"	E	27	25	27	28	37'-6"	E	27	25	27	28
Double 12 G Steel C	L18/L8	40'-0"	C	24	23	24	25	40'-0"	D	25	24	25	26	40'-0"	E	26	24	26	27	40'-0"	E	27	25	27	28	40'-0"	E	28	26	27	29

Header	Detail	trib 5.5'	Min Post Type	Uplift Footing (in)	8'	10'	12'	trib 6'	Min Post Type	Uplift Footing (in)	8'	10'	12'	trib 6.5'	Min Post Type	Uplift Footing (in)	8'	10'	12'	trib 7'	Min Post Type	Uplift Footing (in)	8'	10'	12'	trib 7.5'	Min Post Type	Uplift Footing (in)	8'	10'	12'	trib 8'	Min Post Type	Uplift Footing (in)	8'	10'	12'
On Slab	On Slab	12'-4"	A1					11'-4"	A1					10'-5"	A1					9'-8"	A1					9'-1"	A1					8'-6"	A1				
0.042"x3"x8"	L1	10'-7"	A1	19	19	20	21	10'-0"	A1	19	19	20	21	9'-8"	A1	19	19	20	21	9'-3"	A1	19	20	21	22	8'-10"	A1	19	20	21	22	8'-5"	A1	20	20	22	23
Double 3"x8"	L1/L12	15'-8"	A2	21	21	22	23	14'-11"	A2	21	21	22	23	14'-5"	A2	22	21	23	24	13'-10"	A3	22	21	23	24	13'-3"	A3	22	22	23	24	12'-9"	A3	22	22	23	24
Double 2"x6.625"	L2/L12	14'-0"	A1	20	20	21	22	13'-4"	A2	21	20	22	23	12'-11"	A2	21	21	22	23	12'-4"	A2	21	21	22	23	11'-10"	A2	21	21	22	23	11'-5"	A2	22	21	22	23
16 G Steel C	L18	17'-10"	A3	22	22	23	24	16'-9"	A3	22	22	23	24	16'-1"	A3	23	22	23	24	15'-3"	A3	23	22	23	24	14'-6"	A3	23	22	23	25	13'-10"	A3	23	22	23	25
14 G Steel C	L18	21'-6"	C	24	23	24	25	20'-3"	C	24	23	24	25	19'-6"	C	24	23	24	25	18'-6"	C	24	23	24	26	17'-7"	D	24	23	25	26	16'-10"	D	25	23	25	26
12 G Steel C	L18	31'-4"	E	27	25	26	28	29'-8"	E	27	25	27	28	28'-8"	E	27	25	27	28	27'-3"	E	28	26	27	28	26'-1"	E	28	26	27	28	25'-0"	E	28	26	27	29
Double 16 G Steel C	L18/L8	30'-11"	E	27	25	26	27	29'-6"	E	27	25	26	28	28'-8"	E	27	25	27	28	27'-6"	E	28	26	27	28	26'-5"	E	28	26	27	29	25'-6"	F	28	26	27	29
Double 14 G Steel C	L18/L8	35'-7"	E	28	26	27	28	33'-11"	F	28	26	27	29	33'-0"	F	29	26	28	29	31'-8"	G	29	26	28	29	30'-6"	G	29	27	28	30	29'-5"	G	30	27	28	30
Double 12 G Steel C	L18/L8	40'-0"	F	29	26	28	29	40'-0"	G	30	27	29	30	40'-0"	G	31	28	29	31	40'-0"	H1	31	28	30	31	40'-0"	H1	32	29	30	32	38'-11"	H1	32	29	31	32

Header	Detail	trib 9'	Min Post Type	Uplift Footing (in)	8'	10'	12'	trib 10'	Min Post Type	Uplift Footing (in)	8'	10'	12'	trib 11'	Min Post Type	Uplift Footing (in)	8'	10'	12'	trib 12'	Min Post Type	Uplift Footing (in)	8'	10'	12'	trib 13'	Min Post Type	Uplift Footing (in)	8'	10'	12'
On Slab	On Slab	7'-6"	A1					6'-9"	A1					6'-2"	A1					5'-8"	A1					5'-2"	A1				
0.042"x3"x8"	L1	7'-11"	A1	20	21	22	23	7'-4"	A1	20	22	23	24	6'-11"	A1	20	22	23	24	6'-6"	A1	21	23	24	25	6'-2"	A2	21	23	24	26
Double 3"x8"	L1/L12	12'-0"	A3	23	22	23	24	11'-3"	A3	23	22	24	25	10'-8"	C	24	23	24	25	10'-1"	C	24	23	24	25	9'-8"	C	24	23	24	26
Double 2"x6.625"	L2/L12	10'-9"	A3	22	21	23	24	10'-1"	A3	22	22	23	24	9'-8"	A3	23	22	23	24	9'-2"	A3	23	23	24	25	8'-9"	B	23	23	24	26
16 G Steel C	L18	12'-10"	C	23	22	24	25	11'-10"	C	24	23	24	25	11'-1"	C	24	23	24	25	10'-5"	C	24	23	24	25	9'-10"	C	24	23	24	26
14 G Steel C	L18	15'-8"	D	25	24	25	26	14'-6"	D	25	24	25	26	13'-8"	D	25	24	25	27	12'-9"	E	26	24	26	27	12'-2"	E	26	24	26	27
12 G Steel C	L18	23'-5"	F	29	26	28	29	21'-10"	F	29	26	28	29	20'-8"	G	29	27	28	30	19'-6"	G	30	27	28	30	18'-7"	G	30	27	29	30
Double 16 G Steel C	L18/L8	24'-2"	F	29	26	28	29	22'-9"	G	29	27	28	30	21'-9"	G	30	27	29	30	20'-8"	G	30	27	29	30	19'-10"	G	31	28	29	31
Double 14 G Steel C	L18/L8	27'-11"	G	30	27	29	30	26'-4"	G	31	28	29	31	25'-2"	G	31	28	30	31	24'-0"	H1	32	28	30	31	23'-1"	H1	32	29	30	32
Double 12 G Steel C	L18/L8	36'-11"	H1	33	29	31	33	34'-10"	H1	34	30	31	33	33'-4"	H1	34	30	32	33	31'-10"	H1	35	30	32	34	30'-8"	H2	35	31	33	34

Header	Detail	trib 14'	Min Post Type	Uplift Footing (in)	8'	10'	12'	trib 15'	Min Post Type	Uplift Footing (in)	8'	10'	12'	trib 16'	Min Post Type	Uplift Footing (in)	8'	10'	12'	trib 17'	Min Post Type	Uplift Footing (in)	8'	10'	12'	trib 18'	Min Post Type	Uplift Footing (in)	8'	10'	12'
On Slab	On Slab	4'-10"	A1					4'-6"	A1					4'-3"	A1					4'-0"	A1					3'-9"	A1				
0.042"x3"x8"	L1	5'-10"	A2	21	23	25	26	5'-7"	A2	21	24	25	27	5'-4"	A2	21	24	26	27	5'-1"	A2	21	25	26	27	4'-10"	A2	21	25	27	28
Double 3"x8"	L1/L12	9'-3"	C	24	23	25	26	8'-11"	D	25	24	25	27	8'-6"	D	25	24	26	27	8'-2"	D	25	25	26	27	7'-11"	D	25	25	27	28
Double 2"x6.625"	L2/L12	8'-5"	C	24	23	25	26	8'-1"	C	24	24	25	27	7'-9"	C	24	24	26	27	7'-6"	C	24	25	26	27	7'-3"	D	24	25	27	28
16 G Steel C	L18	9'-2"	C	24	23	25	26	8'-7"	C	24	24	25	27	8'-0"	C	24	24	26	27	7'-7"	C	24	25	26	27	7'-2"	C	24	25	27	28
14 G Steel C	L18	11'-5"	E	26	24	26	27	10'-11"	E	26	25	26	27	10'-5"	E	26	25	26	27	10'-0"	E	27	25	26	27	9'-7"	E	27	25	27	28
12 G Steel C	L18	17'-8"	G	30	27	29	30	17'-0"	G	30	27	29	30	16'-3"	G	31	28	29	31	15'-8"	G	31	28	29	31	15'-0"	G	31	28	30	31
Double 16 G Steel C	L18/L8	19'-0"	G	31	28	29	31	18'-5"	G	31	28	30	31	17'-9"	H1	32	28	30	31	17'-2"	H1	32	28	30	32	16'-7"	H1	32	29	30	32
Double 14 G Steel C	L18/L8	22'-2"	H1	32	29	31	32	21'-6"	H1	33	29	31	32	20'-8"	H1	33	29	31	33	20'-1"	H1	34	30	31	33	19'-6"	H1	34	30	32	33
Double 12 G Steel C	L18/L8	29'-6"	H2	36	31	33	34	28'-7"	H2	36	31	33	35	27'-7"	H2	37	32	33	35	26'-10"	H2	37	32	34	35	26'-0"	H2	37	32	34	36

Amerimax Exterior Home Products
28921 US Hwy 74
Romoland, CA 92585

Carl Putnam, P. E.
3441 Ivylink Place
Lynchburg, VA 24503
carlputnam@comcast.net

Ground Snow Load: 10 psf **Live Load: 10 psf** **Wind Speed: 95 MPH EXPOSURE B** **Seismic Ss= 150%** **Seismic Design Category D** **Freestanding Structures**

Table 2.1b (cubic footing "d"; Constrained Footing (in) by Max Post Length)

Header	Detail	trib 3'	Min Post Type	Uplift Footing (in)	8'	10'	12'	trib 3.5'	Min Post Type	Uplift Footing (in)	8'	10'	12'	trib 4'	Min Post Type	Uplift Footing (in)	8'	10'	12'	trib 4.5'	Min Post Type	Uplift Footing (in)	8'	10'	12'	trib 5'	Min Post Type	Uplift Footing (in)	8'	10'	12'
On Slab	On Slab	n/a	A1					n/a	A1					n/a	A1					n/a	A1					n/a	A1				
0.042"x3"x8"	L1	14'-11"	A1	16	24	25	27	13'-8"	A1	17	23	25	26	12'-7"	A1	17	23	24	25	12'-0"	A1	18	23	24	25	11'-3"	A1	18	22	24	25
Double 3"x8"	L1/L12	21'-8"	A1	19	26	28	29	19'-10"	A1	19	26	27	29	18'-5"	A1	19	25	27	28	17'-8"	A1	20	25	26	28	16'-7"	A2	20	25	26	27
Double 2"x6.625"	L2/L12	19'-2"	A1	18	24	26	27	17'-7"	A1	18	24	25	26	16'-4"	A1	19	23	25	26	15'-8"	A1	19	23	24	26	14'-9"	A1	19	23	24	25
16 G Steel C	L18	26'-4"	A1	20	28	29	31	23'-9"	A2	20	27	28	30	21'-9"	A2	21	26	28	29	20'-7"	A2	21	26	27	29	19'-1"	A3	21	25	27	28
14 G Steel C	L18	31'-4"	A2	21	29	31	32	28'-4"	A3	21	28	30	31	26'-0"	A3	22	28	29	31	24'-8"	A3	22	27	29	30	22'-11"	B	22	27	28	30
12 G Steel C	L18	40'-0"	C	23	31	32	34	40'-0"	D	24	31	32	34	37'-4"	D	25	30	32	33	35'-7"	E	25	30	32	33	33'-3"	E	25	29	31	32
Double 16 G Steel C	L18/L8	40'-0"	C	23	31	32	34	38'-9"	D	24	30	32	34	36'-1"	D	24	30	32	33	34'-7"	E	25	30	31	33	32'-8"	E	25	29	31	32
Double 14 G Steel C	L18/L8	40'-0"	C	23	31	32	34	40'-0"	D	24	31	32	34	40'-0"	E	25	31	32	34	39'-8"	E	26	31	32	34	37'-6"	E	26	30	32	33
Double 12 G Steel C	L18/L8	40'-0"	C	23	31	32	34	40'-0"	D	24	31	32	34	40'-0"	E	25	31	32	34	40'-0"	E	26	31	32	34	40'-0"	E	27	31	32	34

Header	Detail	trib 5.5'	Min Post Type	Uplift Footing (in)	8'	10'	12'	trib 6'	Min Post Type	Uplift Footing (in)	8'	10'	12'	trib 6.5'	Min Post Type	Uplift Footing (in)	8'	10'	12'	trib 7'	Min Post Type	Uplift Footing (in)	8'	10'	12'	trib 7.5'	Min Post Type	Uplift Footing (in)	8'	10'	12'	trib 8'	Min Post Type	Uplift Footing (in)	8'	10'	12'
On Slab	On Slab	n/a	A1					n/a	A1					n/a	A1					n/a	A1					n/a	A1					n/a	A1				
0.042"x3"x8"	L1	10'-7"	A1	18	22	23	24	10'-0"	A1	18	22	23	24	9'-8"	A1	18	21	23	24	9'-3"	A1	19	21	22	23	8'-10"	A1	19	21	22	23	8'-5"	A1	19	21	22	23
Double 3"x8"	L1/L12	15'-8"	A2	20	24	26	27	14'-11"	A2	21	24	25	27	14'-5"	A2	21	24	25	26	13'-10"	A3	21	23	25	26	13'-3"	A3	21	23	25	26	12'-9"	A3	22	23	24	25
Double 2"x6.625"	L2/L12	14'-0"	A1	20	22	24	25	13'-4"	A2	20	22	23	25	12'-11"	A2	20	22	23	24	12'-4"	A2	20	22	23	24	11'-10"	A2	21	21	23	24	11'-5"	A2	21	21	23	24
16 G Steel C	L18	17'-10"	A3	21	25	26	28	16'-9"	A3	22	25	26	27	16'-1"	A3	22	24	26	27	15'-3"	A3	22	24	25	27	14'-6"	A3	22	24	25	26	13'-10"	A3	22	23	25	26
14 G Steel C	L18	21'-6"	C	23	26	28	29	20'-3"	C	23	26	27	29	19'-6"	C	23	26	27	28	18'-6"	C	23	25	27	28	17'-7"	D	24	25	26	28	16'-10"	D	24	25	26	27
12 G Steel C	L18	31'-4"	E	26	29	31	32	29'-8"	E	26	28	30	32	28'-8"	E	26	28	30	31	27'-3"	E	27	28	30	31	26'-1"	E	27	28	29	31	25'-0"	E	27	27	29	30
Double 16 G Steel C	L18/L8	30'-11"	E	26	29	30	32	29'-6"	E	26	28	30	32	28'-8"	E	26	28	30	31	27'-6"	E	27	28	30	31	26'-5"	E	27	28	29	31	25'-6"	F	27	27	29	30
Double 14 G Steel C	L18/L8	35'-7"	E	27	30	32	33	33'-11"	F	27	29	31	33	33'-0"	F	28	29	31	32	31'-8"	G	28	29	31	32	30'-6"	G	28	29	30	32	29'-5"	G	29	28	30	31
Double 12 G Steel C	L18/L8	40'-0"	F	28	31	32	34	40'-0"	G	29	31	32	34	40'-0"	G	30	31	32	34	40'-0"	H1	30	31	32	34	40'-0"	H1	31	31	32	34	38'-11"	H1	31	30	32	34

Header	Detail	trib 9'	Min Post Type	Uplift Footing (in)	8'	10'	12'	trib 10'	Min Post Type	Uplift Footing (in)	8'	10'	12'	trib 11'	Min Post Type	Uplift Footing (in)	8'	10'	12'	trib 12'	Min Post Type	Uplift Footing (in)	8'	10'	12'	trib 13'	Min Post Type	Uplift Footing (in)	8'	10'	12'
On Slab	On Slab	n/a	A1					n/a	A1					n/a	A1					n/a	A1					n/a	A1				
0.042"x3"x8"	L1	7'-11"	A1	19	20	22	23	7'-4"	A1	19	20	22	23	6'-11"	A1	20	21	22	23	6'-6"	A1	20	21	23	24	6'-2"	A2	20	22	23	24
Double 3"x8"	L1/L12	12'-0"	A3	22	23	24	25	11'-3"	A3	22	22	24	25	10'-8"	C	23	23	24	25	10'-1"	C	23	23	24	25	9'-8"	C	23	23	24	25
Double 2"x6.625"	L2/L12	10'-9"	A3	21	21	23	24	10'-1"	A3	22	22	23	24	9'-8"	A3	22	22	23	24	9'-2"	A3	22	22	23	25	8'-9"	B	22	22	24	25
16 G Steel C	L18	12'-10"	C	23	23	24	26	11'-10"	C	23	23	24	25	11'-1"	C	23	23	24	25	10'-5"	C	23	23	24	25	9'-10"	C	23	23	24	26
14 G Steel C	L18	15'-8"	D	24	24	26	27	14'-6"	D	24	24	25	26	13'-8"	D	25	24	25	27	12'-9"	E	25	24	26	27	12'-2"	E	25	24	26	27
12 G Steel C	L18	23'-5"	F	28	27	28	30	21'-10"	F	28	26	28	29	20'-8"	G	28	27	28	30	19'-6"	G	29	27	28	30	18'-7"	G	29	27	29	30
Double 16 G Steel C	L18/L8	24'-2"	F	28	27	29	30	22'-9"	G	28	27	28	30	21'-9"	G	29	27	29	30	20'-8"	G	29	27	29	30	19'-10"	G	29	28	29	31
Double 14 G Steel C	L18/L8	27'-11"	G	29	28	30	31	26'-4"	G	30	28	29	31	25'-2"	G	30	28	30	31	24'-0"	H1	31	28	30	31	23'-1"	H1	31	29	30	32
Double 12 G Steel C	L18/L8	36'-11"	H1	32	30	32	33	34'-10"	H1	33	30	31	33	33'-4"	H1	33	30	32	33	31'-10"	H1	34	30	32	34	30'-8"	H2	34	31	33	34

Header	Detail	trib 14'	Min Post Type	Uplift Footing (in)	8'	10'	12'	trib 15'	Min Post Type	Uplift Footing (in)	8'	10'	12'	trib 16'	Min Post Type	Uplift Footing (in)	8'	10'	12'	trib 17'	Min Post Type	Uplift Footing (in)	8'	10'	12'	trib 18'	Min Post Type	Uplift Footing (in)	8'	10'	12'
On Slab	On Slab	n/a	A1					n/a	A1					n/a	A1					n/a	A1					n/a	A1				
0.042"x3"x8"	L1	5'-10"	A2	20	22	24	25	5'-7"	A2	20	23	24	25	5'-4"	A2	20	23	24	26	5'-1"	A2	21	23	25	26	4'-10"	A2	21	24	25	26
Double 3"x8"	L1/L12	9'-3"	C	23	23	24	26	8'-11"	D	24	23	25	26	8'-6"	D	24	23	25	26	8'-2"	D	24	24	25	26	7'-11"	D	24	24	25	26
Double 2"x6.625"	L2/L12	8'-5"	C	23	23	24	25	8'-1"	C	23	23	24	25	7'-9"	C	23	23	24	26	7'-6"	C	23	23	25	26	7'-3"	D	23	24	25	26
16 G Steel C	L18	9'-2"	C	23	23	24	26	8'-7"	C	23	23	24	26	8'-0"	C	23	23	24	26	7'-7"	C	23	23	25	26	7'-2"	C	23	24	25	26
14 G Steel C	L18	11'-5"	E	25	24	26	27	10'-11"	E	25	25	26	27	10'-5"	E	25	25	26	27	10'-0"	E	26	25	26	27	9'-7"	E	26	25	26	28
12 G Steel C	L18	17'-8"	G	29	27	29	30	17'-0"	G	29	27	29	30	16'-3"	G	30	28	29	31	15'-8"	G	30	28	29	31	15'-0"	G	30	28	30	31
Double 16 G Steel C	L18/L8	19'-0"	G	30	28	29	31	18'-5"	G	30	28	30	31	17'-9"	H1	30	28	30	31	17'-2"	H1	31	28	30	32	16'-7"	H1	31	29	30	32
Double 14 G Steel C	L18/L8	22'-2"	H1	31	29	31	32	21'-6"	H1	32	29	31	32	20'-8"	H1	32	29	31	33	20'-1"	H1	32	30	31	33	19'-6"	H1	33	30	32	33
Double 12 G Steel C	L18/L8	29'-6"	H2	34	31	33	34	28'-7"	H2	35	31	33	35	27'-7"	H2	35	32	33	35	26'-10"	H2	36	32	34	35	26'-0"	H2	36	32	34	36

Ground Snow Load: 10 psf **Live Load: 10 psf** **Wind Speed: 95 MPH EXPOSURE C or 110 MPH EXPOSURE B** **Seismic Ss= 150%** **Seismic Design Category D** **Structures are Attached to Existing Building**

Table 2.1c (cubic footing "d"; Constrained Footing (in) by Max Post Length)

Header	Detail	trib 3'	Min Post Type	Uplift Footing (in)	8'	10'	12'	trib 3.5'	Min Post Type	Uplift Footing (in)	8'	10'	12'	trib 4'	Min Post Type	Uplift Footing (in)	8'	10'	12'	trib 4.5'	Min Post Type	Uplift Footing (in)	8'	10'	12'	trib 5'	Min Post Type	Uplift Footing (in)	8'	10'	12'
On Slab	On Slab	22'-8"	A1					19'-5"	A1					17'-0"	A1					15'-1"	A1					13'-7"	A1				
0.042"x3"x8"	L1	14'-11"	A1	19	18	19	20	13'-8"	A1	20	18	19	20	12'-7"	A1	20	19	20	21	12'-0"	A1	20	19	20	21	11'-3"	A1	21	20	21	22
Double 3"x8"	L1/L12	21'-8"	A1	22	19	21	21	19'-10"	A1	22	20	21	22	18'-5"	A1	23	20	21	22	17'-8"	A1	23	20	22	23	16'-7"	A2	24	21	22	23
Double 2"x6.625"	L2/L12	19'-2"	A1	21	19	20	21	17'-7"	A1	21	19	20	21	16'-4"	A1	22	19	21	22	15'-8"	A1	22	20	21	22	14'-9"	A1	23	20	21	22
16 G Steel C	L18	26'-4"	A1	23	20	22	23	23'-9"	A2	24	21	22	23	21'-9"	A2	24	21	22	23	20'-7"	A2	25	21	22	24	19'-1"	A3	25	21	23	24
14 G Steel C	L18	31'-4"	A2	25	21	23	24	28'-4"	A3	25	22	23	24	26'-0"	A3	25	22	23	24	24'-8"	A3	26	22	24	25	22'-11"	B	26	22	24	25
12 G Steel C	L18	40'-0"	C	27	23	24	25	40'-0"	D	28	24	25	26	37'-4"	D	29	24	25	27	35'-7"	E	29	24	26	27	33'-3"	E	30	25	26	27
Double 16 G Steel C	L18/L8	40'-0"	C	27	23	24	25	38'-9"	D	28	23	25	26	36'-1"	D	28	24	25	26	34'-7"	E	29	24	26	27	32'-8"	E	30	25	26	27
Double 14 G Steel C	L18/L8	40'-0"	C	27	23	24	25	40'-0"	D	28	24	25	26	40'-0"	E	29	24	26	27	39'-8"	E	31	25	27	28	37'-6"	E	31	25	27	28
Double 12 G Steel C	L18/L8	40'-0"	C	27	23	24	25	40'-0"	D	28	24	25	26	40'-0"	E	29	24	26	27	40'-0"	E	31	25	27	28	40'-0"	E	32	26	27	29

Header	Detail	trib 5.5'	Min Post Type	Uplift Footing (in)	8'	10'	12'	trib 6'	Min Post Type	Uplift Footing (in)	8'	10'	12'	trib 6.5'	Min Post Type	Uplift Footing (in)	8'	10'	12'	trib 7'	Min Post Type	Uplift Footing (in)	8'	10'	12'	trib 7.5'	Min Post Type	Uplift Footing (in)	8'	10'	12'	trib 8'	Min Post Type	Uplift Footing (in)	8'	10'	12'
On Slab	On Slab	12'-4"	A1					11'-4"	A1					10'-5"	A1					9'-8"	A1					9'-1"	A1					8'-6"	A1				
0.042"x3"x8"	L1	10'-7"	A1	21	20	21	22	10'-0"	A1	21	21	22	23	9'-8"	A1	22	21	22	23	9'-3"	A1	22	21	23	24	8'-10"	A1	22	22	23	24	8'-5"	A1	22	22	23	25
Double 3"x8"	L1/L12	15'-8"	A2	24	21	22	23	14'-11"	A2	24	21	22	23	14'-5"	A2	25	21	23	24	13'-10"	A3	25	21	23	24	13'-3"	A3	25	22	23	24	12'-9"	A3	25	22	23	25
Double 2"x6.625"	L2/L12	14'-0"	A1	23	20	21	22	13'-4"	A2	23	21	22	23	12'-11"	A2	24	21	22	23	12'-4"	A2	24	21	23	24	11'-10"	A2	24	22	23	24	11'-5"	A2	24	22	23	25
16 G Steel C	L18	17'-10"	A3	25	22	23	24	16'-9"	A3	25	22	23	24	16'-1"	A3	26	22	23	24	15'-3"	A3	26	22	23	24	14'-6"	A3	26	22	23	25	13'-10"	A3	26	22	23	25
14 G Steel C	L18	21'-6"	C	27	23	24	25	20'-3"	C	27	23	24	25	19'-6"	C	27	23	24	25	18'-6"	C	27	23	24	26	17'-7"	D	28	23	25	26	16'-10"	D	28	23	25	26
12 G Steel C	L18	31'-4"	E	30	25	26	28	29'-8"	E	30	25	27	28	28'-8"	E	31	25	27	28	27'-3"	E	31	26	27	28	26'-1"	E	31	26	27	28	25'-0"	E	32	26	27	29
Double 16 G Steel C	L18/L8	30'-11"	E	30	25	26	27	29'-6"	E	30	25	26	28	28'-8"	E	31	25	27	28	27'-6"	E	31	26	27	28	26'-5"	E	32	26	27	29	25'-6"	F	32	26	27	29
Double 14 G Steel C	L18/L8	35'-7"	E	31	26	27	28	33'-11"	F	32	26	27	29	33'-0"	F	32	26	28	29	31'-8"	G	33	26	28	29	30'-6"	G	33	27	28	30	29'-5"	G	33	27	28	30
Double 12 G Steel C	L18/L8	40'-0"	F	33	26	28	29	40'-0"	G	34	27	29	30	40'-0"	G	35	28	29	31	40'-0"	H1	35	28	30	31	40'-0"	H1	36	29	30	32	38'-11"	H1	37	29	31	32

Header	Detail	trib 9'	Min Post Type	Uplift Footing (in)	8'	10'	12'	trib 10'	Min Post Type	Uplift Footing (in)	8'	10'	12'	trib 11'	Min Post Type	Uplift Footing (in)	8'	10'	12'	trib 12'	Min Post Type	Uplift Footing (in)	8'	10'	12'	trib 13'	Min Post Type	Uplift Footing (in)	8'	10'	12'
On Slab	On Slab	7'-6"	A1					6'-9"	A1					6'-2"	A1					5'-8"	A1					5'-2"	A1				
0.042"x3"x8"	L1	7'-11"	A1	22	23	24	25	7'-4"	A1	23	23	25	26	6'-11"	A1	23	24	25	27	6'-6"	A1	23	25	26	27	6'-2"	A1	23	25	27	28
Double 3"x8"	L1/L12	12'-0"	A1	26	23	24	25	11'-3"	A1	26	23	25	26	10'-8"	A1	27	24	25	27	10'-1"	A1	27	25	26	27	9'-8"	A1	27	25	27	28
Double 2"x6.625"	L2/L12	10'-9"	A1	25	23	24	25	10'-1"	A1	25	23	25	26	9'-8"	A1	26	24	25	27	9'-2"	A1	26	25	26	27	8'-9"	A1	26	25	27	28
16 G Steel C	L18	12'-10"	A1	26	23	24	25	11'-10"	A1	27	23	25	26	11'-1"	A1	27	24	25	27	10'-5"	A1	27	25	26	27	9'-10"	A1	27	25	27	28
14 G Steel C	L18	15'-8"	A1	28	24	25	26	14'-6"	A1	28	24	25	26	13'-8"	A1	29	24	25	27	12'-9"	A1	29	25	26	27	12'-2"	A1	29	25	27	28
12 G Steel C	L18	23'-5"	A1	32	26	28	29	21'-10"	A1	33	26	28	29	20'-8"	A2	33	27	28	30	19'-6"	A2	33	27	28	30	18'-7"	A2	34	27	29	30
Double 16 G Steel C	L18/L8	24'-2"	A1	33	26	28	29	22'-9"	A1	33	27	28	30	21'-9"	A2	34	27	29	30	20'-8"	A2	34	27	29	30	19'-10"	A3	35	28	29	31
Double 14 G Steel C	L18/L8	27'-11"	A2	34	27	29	30	26'-4"	A2	35	28	29	31	25'-2"	A3	35	28	30	31	24'-0"	A3	36	28	30	31	23'-1"	C	36	29	30	32
Double 12 G Steel C	L18/L8	36'-11"	A3	38	29	31	33	34'-10"	C	38	30	31	33	33'-4"	D	39	30	32	33	31'-10"	D	39	30	32	34	30'-8"	E	40	31	33	34

Header	Detail	trib 14'	Min Post Type	Uplift Footing (in)	8'	10'	12'	trib 15'	Min Post Type	Uplift Footing (in)	8'	10'	12'	trib 16'	Min Post Type	Uplift Footing (in)	8'	10'	12'	trib 17'	Min Post Type	Uplift Footing (in)	8'	10'	12'	trib 18'	Min Post Type	Uplift Footing (in)	8'	10'	12'
On Slab	On Slab	4'-10"	A1					4'-6"	A1					4'-3"	A1					4'-0"	A1					3'-9"	A1				
0.042"x3"x8"	L1	5'-10"	A1	24	26	27	28	5'-7"	A1	24	26	28	29	5'-4"	A1	24	26	28	29	5'-1"	A1	24	27	28	30	4'-10"	A1	24	27	29	30
Double 3"x8"	L1/L12	9'-3"	A1	27	26	27	28	8'-11"	A1	28	26	28	29	8'-6"	A1	28	26	28	29	8'-2"	A1	28	27	28	30	7'-11"	A1	28	27	29	30
Double 2"x6.625"	L2/L12	8'-5"	A1	27	26	27	28	8'-1"	A1	27	26	28	29	7'-9"	A1	27	26	28	29	7'-6"	A1	27	27	28	30	7'-3"	A1	27	27	29	30
16 G Steel C	L18	9'-2"	A1	27	26	27	28	8'-7"	A1	27	26	28	29	8'-0"	A1	27	26	28	29	7'-7"	A1	27	27	28	30	7'-2"	A1	27	27	29	30
14 G Steel C	L18	11'-5"	A1	29	26	27	28	10'-11"	A1	30	26	28	29	10'-5"	A1	30	26	28	29	10'-0"	A1	30	27	28	30	9'-7"	A1	30	27	29	30
12 G Steel C	L18	17'-8"	A3	34	27	29	30	17'-0"	A3	34	27	29	30	16'-3"	A3	35	28	29	31	15'-8"	A3	35	28	29	31	15'-0"	B	35	28	30	31
Double 16 G Steel C	L18/L8	19'-0"	A3	35	28	29	31	18'-5"	A3	35	28	30	31	17'-9"	C	36	28	30	31	17'-2"	C	36	28	30	32	16'-7"	C	36	29	30	32
Double 14 G Steel C	L18/L8	22'-2"	C	37	29	31	32	21'-6"	C	37	29	31	32	20'-8"	D	37	29	31	33	20'-1"	D	38	30	31	33	19'-6"	D	38	30	32	33
Double 12 G Steel C	L18/L8	29'-6"	E	40	31	33	34	28'-7"	E	41	31	33	35	27'-7"	E	41	32	33	35	26'-10"	E	42	32	34	35	26'-0"	E	42	32	34	36

Registered Professional Engineer (Civil) CERTIFICATE NO. 39702 CARL PUTNAM Date Signed ARIZONA U.S.A. Expires 09/30/2024

SECTION 2.0 POST SPACING, POST TYPE AND FOOTING SIZE FOR LATTICE COVERS

Roof Solidity: 60%

Ground Snow Load: 10 psf Live Load: 10 psf Wind Speed: 105 MPH EXPOSURE C or 120 MPH EXPOSURE B Seismic Ss= 150% Seismic Design Category D Structures are Attached to Existing Building

Table 2.2a — cubic footing "d" Constrained Footing (in) Max Post Length

Header	Detail	3' trib	Min Post Type	Uplift Footing (in)	8'	10'	12'	3.5' trib	Min Post Type	Uplift Footing (in)	8'	10'	12'	4' trib	Min Post Type	Uplift Footing (in)	8'	10'	12'	4.5' trib	Min Post Type	Uplift Footing (in)	8'	10'	12'	5' trib	Min Post Type	Uplift Footing (in)	8'	10'	12'	5.5' trib	Min Post Type	Uplift Footing (in)	8'	10'	12'	6' trib	Min Post Type	Uplift Footing (in)	8'	10'	12'	6.5' trib	Min Post Type	Uplift Footing (in)	8'	10'	12'	7' trib	Min Post Type	Uplift Footing (in)	8'	10'	12'	7.5' trib	Min Post Type	Uplift Footing (in)	8'	10'	12'	8' trib	Min Post Type	Uplift Footing (in)	8'	10'	12'
On Slab	On Slab	22'-8''	A1					19'-5''	A1					17'-0''	A1					15'-1''	A1					13'-7''	A1					12'-4''	A1					11'-4''	A1					10'-5''	A1					9'-8''	A1					9'-1''	A1					8'-6''	A1			
0.042"x3"x8"	L1	14'-11''	A1	21	18	19	20	13'-8''	A1	21	19	20	21	12'-7''	A1	21	20	21	22	12'-0''	A1	22	20	21	22	11'-3''	A1	22	21	22	23	10'-7''	A1	23	21	22	24	10'-0''	A1	23	22	23	24	9'-8''	A1	23	22	23	25	9'-3''	A1	23	23	24	25	8'-10''	A1	24	23	24	25	8'-5''	A1	24	23	25	26
Double 3"x8"	L1/L12	21'-8''	A1	23	19	21	21	19'-10''	A1	24	20	21	22	18'-5''	A1	24	20	21	22	17'-8''	A1	25	20	22	23	16'-7''	A2	25	21	22	23	15'-8''	A2	26	21	22	24	14'-11''	A2	26	22	23	24	14'-5''	A2	26	22	23	25	13'-10''	A3	27	23	24	25	13'-3''	A3	27	23	24	25	12'-9''	A3	27	23	25	26
Double 2"x6.625"	L2/L12	19'-2''	A1	22	19	20	21	17'-7''	A1	23	19	20	21	16'-4''	A1	23	20	21	22	15'-8''	A1	24	20	21	22	14'-9''	A1	24	21	22	23	14'-0''	A1	25	21	22	24	13'-4''	A2	25	22	23	24	12'-11''	A2	25	22	23	25	12'-4''	A2	26	23	24	25	11'-10''	A2	26	23	24	25	11'-5''	A2	26	23	25	26
16 G Steel C	L18	26'-4''	A1	25	20	22	23	23'-9''	A2	25	21	22	23	21'-9''	A2	26	21	22	23	20'-7''	A2	26	21	22	24	19'-1''	A3	27	21	23	24	17'-10''	A3	27	22	23	24	16'-9''	A3	27	22	23	24	16'-1''	A3	27	22	23	25	15'-3''	A3	28	23	24	25	14'-6''	A3	28	23	24	25	13'-10''	A3	28	23	25	26
14 G Steel C	L18	31'-4''	A2	26	21	23	24	28'-4''	A3	27	22	23	24	26'-0''	A3	27	22	23	24	24'-8''	A3	28	22	24	25	22'-11''	B	28	22	24	25	21'-6''	C	29	23	24	25	20'-3''	C	29	23	24	25	19'-6''	C	29	23	24	25	18'-6''	C	29	23	24	26	17'-7''	D	30	23	25	26	16'-10''	D	30	23	25	26
12 G Steel C	L18	40'-0''	C	29	23	24	25	40'-0''	D	30	24	25	26	37'-4''	D	31	24	25	27	35'-7''	E	32	24	26	27	33'-3''	E	32	25	26	27	31'-4''	E	32	25	26	28	29'-8''	E	33	25	27	28	28'-8''	E	33	25	27	28	27'-3''	E	33	26	27	28	26'-1''	E	34	26	27	28	25'-0''	E	34	26	27	29
Double 16 G Steel C	L18/L8	40'-0''	C	29	23	24	25	38'-9''	D	30	23	25	26	36'-1''	D	31	24	25	26	34'-7''	E	31	24	26	27	32'-8''	E	32	25	26	27	30'-11''	E	32	25	26	27	29'-6''	E	33	25	26	28	28'-8''	E	33	25	27	28	27'-6''	E	34	26	27	28	26'-5''	E	34	26	27	29	25'-6''	F	34	26	27	29
Double 14 G Steel C	L18/L8	40'-0''	C	29	23	24	25	40'-0''	D	30	24	25	26	40'-0''	E	32	24	26	27	39'-8''	E	33	25	27	28	37'-6''	E	33	25	27	28	35'-7''	E	34	26	27	28	33'-11''	F	34	26	27	29	33'-0''	F	35	26	28	29	31'-8''	G	35	26	28	29	30'-6''	G	36	27	28	30	29'-5''	G	36	27	28	30
Double 12 G Steel C	L18/L8	40'-0''	C	29	23	24	25	40'-0''	D	30	24	25	26	40'-0''	E	32	24	26	27	40'-0''	E	33	25	27	28	40'-0''	E	34	26	27	29	40'-0''	F	35	26	28	29	40'-0''	G	36	27	29	30	40'-0''	G	37	28	29	31	40'-0''	H1	38	28	30	31	40'-0''	H1	39	29	30	32	38'-11''	H1	39	29	31	32

Table 2.2a — cubic footing "d" Constrained Footing (in) Max Post Length

Header	Detail	9' trib	Min Post Type	Uplift Footing (in)	8'	10'	12'	10' trib	Min Post Type	Uplift Footing (in)	8'	10'	12'	11' trib	Min Post Type	Uplift Footing (in)	8'	10'	12'	12' trib	Min Post Type	Uplift Footing (in)	8'	10'	12'	13' trib	Min Post Type	Uplift Footing (in)	8'	10'	12'	14' trib	Min Post Type	Uplift Footing (in)	8'	10'	12'	15' trib	Min Post Type	Uplift Footing (in)	8'	10'	12'	16' trib	Min Post Type	Uplift Footing (in)	8'	10'	12'	17' trib	Min Post Type	Uplift Footing (in)	8'	10'	12'	18' trib	Min Post Type	Uplift Footing (in)	8'	10'	12'
On Slab	On Slab	7'-6''	A1					6'-9''	A1					6'-2''	A1					5'-8''	A1					5'-2''	A1					4'-10''	A1					4'-6''	A1					4'-3''	A1					4'-0''	A1					3'-9''	A1									
0.042"x3"x8"	L1	7'-11''	A1	24	24	25	27	7'-4''	A1	24	25	26	27	6'-11''	A1	25	25	27	28	6'-6''	A1	25	26	27	29	6'-2''	A2	25	26	28	29	5'-10''	A2	25	27	29	30	5'-7''	A2	25	27	29	30	5'-4''	A2	26	28	29	31	5'-1''	A2	26	28	30	31	4'-10''	A2	26	29	30	32					
Double 3"x8"	L1/L12	12'-0''	A3	28	24	25	27	11'-3''	A3	28	25	26	27	10'-8''	C	29	25	27	28	10'-1''	C	29	26	27	29	9'-8''	C	29	26	28	29	9'-3''	C	29	27	29	30	8'-11''	D	30	27	29	30	8'-6''	D	30	28	29	31	8'-2''	D	30	28	30	31	7'-11''	D	30	29	30	32					
Double 2"x6.625"	L2/L12	10'-9''	A3	27	24	25	27	10'-1''	A3	27	25	26	27	9'-8''	A3	28	25	27	28	9'-2''	A3	28	26	27	29	8'-9''	B	28	26	28	29	8'-5''	C	29	27	29	30	8'-1''	C	29	27	29	30	7'-9''	C	29	28	29	31	7'-6''	C	29	28	30	31	7'-2''	C	29	29	30	32					
16 G Steel C	L18	12'-10''	C	25	27	28	30	11'-5''	C	25	26	28	29	11'-1''	C	25	26	27	29	10'-5''	C	25	26	27	29	9'-10''	C	26	25	27	28	9'-2''	C	26	26	27	29	8'-7''	C	26	26	28	29	8'-0''	C	26	27	28	30	7'-7''	C	26	27	29	30	7'-2''	C	26	28	29	31					
14 G Steel C	L18	15'-8''	D	27	28	30	31	14'-6''	D	27	28	29	31	13'-8''	D	27	27	29	30	12'-9''	E	27	27	28	30	12'-2''	E	28	26	28	29	11'-5''	E	28	26	28	29	10'-11''	E	28	26	28	29	10'-5''	E	28	27	28	30	10'-0''	E	28	27	29	30	9'-7''	E	28	28	29	31					
12 G Steel C	L18	23'-5''	F	30	31	33	35	21'-10''	F	31	31	32	34	20'-8''	G	31	30	32	34	19'-6''	G	31	30	32	34	18'-7''	G	32	29	31	33	17'-8''	G	32	29	31	32	17'-0''	G	32	29	30	32	16'-3''	G	33	28	30	32	15'-8''	G	33	28	30	31	15'-0''	G	33	28	30	31					
Double 16 G Steel C	L18/L8	24'-2''	F	31	31	33	35	22'-9''	G	31	31	33	34	21'-9''	G	32	31	32	34	20'-8''	G	32	30	32	34	19'-10''	G	32	30	32	33	19'-0''	G	33	30	31	33	18'-5''	G	33	29	31	33	17'-9''	H1	33	29	31	32	17'-2''	H1	34	29	31	32	16'-7''	H1	34	29	30	32					
Double 14 G Steel C	L18/L8	27'-11''	G	32	33	35	36	26'-4''	G	33	32	34	36	25'-2''	G	33	32	34	35	24'-0''	H1	34	31	33	35	23'-1''	H1	34	31	33	34	22'-2''	H1	35	31	33	34	21'-6''	H1	35	31	32	34	20'-8''	H1	35	30	32	34	20'-1''	H1	36	30	32	33	19'-6''	H1	36	30	32	33					
Double 12 G Steel C	L18/L8	36'-11''	H1	35	35	37	39	34'-10''	H1	36	35	37	38	33'-4''	H1	36	34	36	38	31'-10''	H1	37	34	36	37	30'-8''	H2	38	33	35	37	29'-6''	H2	38	33	35	37	28'-7''	H2	38	33	35	36	27'-7''	H2	39	33	34	36	26'-10''	H2	39	32	34	36	26'-0''	H2	40	32	34	36					

Amerimax Exterior Home Products
28921 US Hwy 74
Romoland, CA 92585

Carl Putnam, P. E.
3441 Ivylink Place
Lynchburg, VA 24503
carlputnam@comcast.net

Ground Snow Load: 10 psf Live Load: 10 psf Wind Speed: 105 MPH EXPOSURE C or 120 MPH EXPOSURE B Seismic Ss= 150% Seismic Design Category D Freestanding Structures

Table 2.2b — cubic footing "d" Constrained Footing (in) Max Post Length

Header	Detail	3' trib	Min Post Type	Uplift Footing (in)	8'	10'	12'	3.5' trib	Min Post Type	Uplift Footing (in)	8'	10'	12'	4' trib	Min Post Type	Uplift Footing (in)	8'	10'	12'	4.5' trib	Min Post Type	Uplift Footing (in)	8'	10'	12'	5' trib	Min Post Type	Uplift Footing (in)	8'	10'	12'	5.5' trib	Min Post Type	Uplift Footing (in)	8'	10'	12'	6' trib	Min Post Type	Uplift Footing (in)	8'	10'	12'	6.5' trib	Min Post Type	Uplift Footing (in)	8'	10'	12'	7' trib	Min Post Type	Uplift Footing (in)	8'	10'	12'	7.5' trib	Min Post Type	Uplift Footing (in)	8'	10'	12'	8' trib	Min Post Type	Uplift Footing (in)	8'	10'	12'
On Slab	On Slab	n/a	A1					n/a	A1					n/a	A1					n/a	A1					n/a	A1					n/a	A1					n/a	A1					n/a	A1					n/a	A1					n/a	A1					n/a	A1			
0.042"x3"x8"	L1	14'-11''	A1	18	28	29	31	13'-8''	A1	18	27	29	30	12'-7''	A1	19	27	28	30	12'-0''	A1	19	26	28	29	11'-3''	A1	20	26	27	29	10'-7''	A1	20	25	27	28	10'-0''	A1	20	25	26	28	9'-8''	A1	20	25	26	28	9'-3''	A1	20	25	26	27	8'-10''	A1	21	24	26	27	8'-5''	A1	21	24	26	27
Double 3"x8"	L1/L12	21'-8''	A1	20	31	32	34	19'-10''	A1	21	30	32	33	18'-5''	A1	21	29	31	33	17'-8''	A1	22	29	31	32	16'-7''	A2	22	29	30	32	15'-8''	A2	23	28	30	31	14'-11''	A2	23	28	29	31	14'-5''	A2	23	28	29	31	13'-10''	A3	23	27	29	30	13'-3''	A3	24	27	28	30	12'-9''	A3	24	27	28	30
Double 2"x6.625"	L2/L12	19'-2''	A1	20	28	30	31	17'-7''	A1	20	28	29	31	16'-4''	A1	21	27	29	30	15'-8''	A1	21	27	28	30	14'-9''	A1	21	26	28	29	14'-0''	A1	22	26	28	29	13'-4''	A2	22	26	27	29	12'-11''	A2	22	26	27	28	12'-4''	A2	23	25	27	28	11'-10''	A2	23	25	27	28	11'-5''	A2	23	25	26	28
16 G Steel C	L18	26'-4''	A1	22	32	34	36	23'-9''	A2	22	31	33	35	21'-9''	A2	23	31	32	34	20'-7''	A2	23	30	32	33	19'-1''	A3	23	30	31	33	17'-10''	A3	24	29	31	32	16'-9''	A3	24	29	30	32	16'-1''	A3	24	28	30	31	15'-3''	A3	24	28	30	31	14'-6''	A3	24	28	29	31	13'-10''	A3	24	27	29	30
14 G Steel C	L18	31'-4''	A2	23	34	36	37	28'-4''	A3	24	33	35	36	26'-0''	A3	24	32	34	36	24'-8''	A3	24	32	33	35	22'-11''	B	25	31	33	34	21'-6''	C	25	31	32	34	20'-3''	C	25	30	32	33	19'-6''	C	26	30	32	33	18'-6''	C	26	29	31	33	17'-7''	D	26	29	31	32	16'-10''	D	26	29	30	32
12 G Steel C	L18	40'-0''	C	25	36	38	40	40'-0''	D	26	36	38	40	37'-4''	D	27	35	37	39	35'-7''	E	28	35	37	38	33'-3''	E	28	34	36	38	31'-4''	E	28	34	36	37	29'-8''	E	29	33	35	37	28'-8''	E	29	33	35	36	27'-3''	E	29	32	34	36	26'-1''	E	30	32	34	36	25'-0''	E	30	32	34	35
Double 16 G Steel C	L18/L8	40'-0''	C	25	36	38	40	38'-9''	D	26	35	38	39	36'-1''	D	27	35	37	39	34'-7''	E	27	34	36	38	32'-8''	E	28	34	36	38	30'-11''	E	28	34	35	37	29'-6''	E	29	33	35	37	28'-8''	E	29	33	35	36	27'-6''	E	29	33	34	36	26'-5''	E	30	32	34	36	25'-6''	F	30	32	34	35
Double 14 G Steel C	L18/L8	40'-0''	C	25	36	38	40	40'-0''	D	26	36	38	40	40'-0''	E	28	36	38	40	39'-8''	E	29	36	38	40	37'-6''	E	29	35	37	39	35'-7''	E	30	35	37	38	33'-11''	F	30	34	36	38	33'-0''	F	31	34	36	38	31'-8''	G	31	34	36	37	30'-6''	G	31	33	35	37	29'-5''	G	31	33	35	37
Double 12 G Steel C	L18/L8	40'-0''	C	25	36	38	40	40'-0''	D	26	36	38	40	40'-0''	E	28	36	38	40	40'-0''	E	29	36	38	40	40'-0''	E	30	36	38	40	40'-0''	F	31	36	38	40	40'-0''	G	32	36	38	40	40'-0''	G	33	36	38	40	40'-0''	H1	33	36	38	40	40'-0''	H1	34	36	38	40	38'-11''	H1	35	36	38	39

Ground Snow Load: 10 psf Live Load: 10 psf Wind Speed: 95 MPH EXPOSURE C or 110 MPH EXPOSURE B Seismic Ss= 150% Seismic Design Category D Freestanding Structures

Table 2.2c — cubic footing "d" Constrained Footing (in) Max Post Length

Header	Detail	3' trib	Min Post Type	Uplift Footing (in)	8'	10'	12'	3.5' trib	Min Post Type	Uplift Footing (in)	8'	10'	12'	4' trib	Min Post Type	Uplift Footing (in)	8'	10'	12'	4.5' trib	Min Post Type	Uplift Footing (in)	8'	10'	12'	5' trib	Min Post Type	Uplift Footing (in)	8'	10'	12'	5.5' trib	Min Post Type	Uplift Footing (in)	8'	10'	12'	6' trib	Min Post Type	Uplift Footing (in)	8'	10'	12'	6.5' trib	Min Post Type	Uplift Footing (in)	8'	10'	12'	7' trib	Min Post Type	Uplift Footing (in)	8'	10'	12'	7.5' trib	Min Post Type	Uplift Footing (in)	8'	10'	12'	8' trib	Min Post Type	Uplift Footing (in)	8'	10'	12'
On Slab	On Slab	n/a	A1					n/a	A1					n/a	A1					n/a	A1					n/a	A1					n/a	A1					n/a	A1					n/a	A1					n/a	A1					n/a	A1					n/a	A1			
0.042"x3"x8"	L1	14'-11''	A1	17	26	28	29	13'-8''	A1	17	26	27	29	12'-7''	A1	18	25	27	28	12'-0''	A1	18	25	27	28	11'-3''	A1	18	25	26	27	10'-7''	A1	18	24	26	27	10'-0''	A1	19	24	25	27	9'-8''	A1	19	24	25	26	9'-3''	A1	19	23	25	26	8'-10''	A1	19	23	25	26	8'-5''	A1	19	23	24	25
Double 3"x8"	L1/L12	21'-8''	A1	19	29	31	32	19'-10''	A1	19	28	30	32	18'-5''	A1	20	28	30	31	17'-8''	A1	20	28	29	31	16'-7''	A2	21	27	29	30	15'-8''	A2	21	27	28	30	14'-11''	A2	21	26	28	29	14'-5''	A2	22	26	28	29	13'-10''	A3	22	26	27	29	13'-3''	A3	22	26	27	28	12'-9''	A3	22	25	27	28
Double 2"x6.625"	L2/L12	19'-2''	A1	18	27	28	30	17'-7''	A1	19	26	28	29	16'-4''	A1	19	26	27	29	15'-8''	A1	20	26	27	28	14'-9''	A1	20	25	27	28	14'-0''	A1	20	25	26	28	13'-4''	A2	20	25	26	27	12'-11''	A2	21	24	26	27	12'-4''	A2	21	24	25	27	11'-10''	A2	21	24	25	26	11'-5''	A2	21	24	25	26
16 G Steel C	L18	26'-4''	A1	20	31	32	34	23'-9''	A2	21	29	31	32	21'-9''	A2	21	29	30	32	20'-7''	A2	21	29	30	32	19'-1''	A3	22	28	30	31	17'-10''	A3	22	28	29	31	16'-9''	A3	22	27	29	30	16'-1''	A3	22	27	29	30	15'-3''	A3	22	27	28	30	14'-6''	A3	23	26	28	29	13'-10''	A3	23	26	27	29
14 G Steel C	L18	31'-4''	A2	22	32	34	35	28'-4''	A3	22	31	33	35	26'-0''	A3	22	30	32	34	24'-8''	A3	23	30	32	33	22'-11''	B	23	30	31	33	21'-6''	C	23	29	31	32	20'-3''	C	23	29	30	32	19'-6''	C	24	28	30	31	18'-6''	C	24	28	30	31	17'-7''	D	24	28	29	31	16'-10''	D	24	27	29	30
12 G Steel C	L18	40'-0''	C	23	34	36	38	40'-0''	D	25	34	36	38	37'-4''	D	25	33	35	37	35'-7''	E	26	33	35	37	33'-3''	E	26	32	34	36	31'-4''	E	26	32	34	35	29'-8''	E	27	32	33	35	28'-8''	E	27	31	33	35	27'-3''	E	27	31	33	34	26'-1''	E	28	31	32	34	25'-0''	E	28	30	32	33
Double 16 G Steel C	L18/L8	40'-0''	C	23	34	36	38	38'-9''	D	24	34	36	37	36'-1''	D	25	33	35	37	34'-7''	E	25	33	35	36	32'-8''	E	26	32	34	36	30'-11''	E	26	32	34	35	29'-6''	E	27	31	33	35	28'-8''	E	27	31	33	35	27'-6''	E	27	31	33	34	26'-5''	E	28	31	32	34	25'-6''	F	28	30	32	34
Double 14 G Steel C	L18/L8	40'-0''	C	23	34	36	38	40'-0''	D	25	34	36	38	40'-0''	E	26	34	36	38	39'-8''	E	27	34	36	38	37'-6''	E	27	33	35	37	35'-7''	E	28	33	35	37	33'-11''	F	28	33	35	36	33'-0''	F	28	32	34	36	31'-8''	G	29	32	34	36	30'-6''	G	29	32	34	35	29'-5''	G	29	31	33	35
Double 12 G Steel C	L18/L8	40'-0''	C	23	34	36	38	40'-0''	D	25	34	36	38	40'-0''	E	26	34	36	38	40'-0''	E	27	34	36	38	40'-0''	E	28	34	36	38	40'-0''	F	29	34	36	38	40'-0''	G	29	34	36	38	40'-0''	G	30	34	36	38	40'-0''	H1	31	34	36	38	40'-0''	H1	32	34	36	38	38'-11''	H1	32	34	36	37

Registered Professional Engineer (Civil) CERTIFICATE NO. 39702 CARL PUTNAM Date Signed ARIZONA, U.S.A. Expires 09/30/2024

JAN 20 2023

SECTION 2.0 POST SPACING, POST TYPE AND FOOTING SIZE FOR LATTICE COVERS

Roof Solidity: 60%

Ground Snow Load: 10 psf · Live Load: 10 psf · Wind Speed: 110 MPH EXPOSURE C or 130 MPH EXPOSURE B · Seismic Ss= 150% · Seismic Design Category D · Structures are Attached to Existing Building

Table 2.3a (columns 8', 10', 12' = cubic footing "d" Constrained Footing (in), Max Post Length)

Header	Detail	trib 3'	Min Post Type	Uplift Footing (in)	8'	10'	12'	trib 3.5'	Min Post Type	Uplift Footing (in)	8'	10'	12'	trib 4'	Min Post Type	Uplift Footing (in)	8'	10'	12'	trib 4.5'	Min Post Type	Uplift Footing (in)	8'	10'	12'	trib 5'	Min Post Type	Uplift Footing (in)	8'	10'	12'	trib 5.5'	Min Post Type	Uplift Footing (in)	8'	10'	12'
On Slab	On Slab	22'-8"	A1					19'-5"	A1					17'-0"	A1					15'-1"	A1					13'-7"	A1					12'-4"	A1				
0.042"x3"x8"	L1	14'-11"	A1	21	19	20	21	13'-8"	A1	22	19	20	21	12'-7"	A1	22	20	21	22	11'-9"	A1	23	21	22	23	11'-0"	A1	23	21	22	24	10'-5"	A1	23	22	23	24
Double 3"x8"	L1/L12	21'-8"	A1	24	19	21	21	19'-10"	A1	25	20	21	22	18'-5"	A1	25	20	21	22	17'-3"	A1	26	21	22	23	16'-3"	A2	26	21	22	24	15'-5"	A2	26	22	23	24
Double 2"x6.625"	L2/L12	19'-2"	A1	23	19	20	21	17'-7"	A1	24	19	20	21	16'-4"	A1	24	20	21	22	15'-4"	A1	25	21	22	23	14'-6"	A1	25	21	22	24	13'-9"	A1	25	22	23	24
16 G Steel C	L18	26'-4"	A1	26	20	22	23	23'-9"	A2	26	21	22	23	21'-9"	A2	27	21	22	23	20'-1"	A2	27	21	22	23	18'-8"	A2	27	21	22	24	17'-6"	A3	28	22	23	24
14 G Steel C	L18	31'-4"	A2	27	21	23	24	28'-4"	A3	28	22	23	24	26'-0"	A3	28	22	23	24	24'-0"	A3	29	22	23	24	22'-5"	A3	29	22	24	25	21'-0"	C	29	22	24	25
12 G Steel C	L18	40'-0"	C	30	23	24	25	40'-0"	D	31	24	25	26	37'-4"	D	32	24	25	27	34'-9"	E	32	24	26	27	32'-7"	E	33	24	26	27	30'-9"	E	33	25	26	27
Double 16 G Steel C	L18/L8	40'-0"	C	30	23	24	25	38'-9"	D	31	23	25	26	36'-1"	D	32	24	25	26	33'-11"	E	32	24	25	27	32'-0"	E	33	24	26	27	30'-5"	E	33	25	26	27
Double 14 G Steel C	L18/L8	40'-0"	C	30	23	24	25	40'-0"	D	31	24	25	26	40'-0"	E	33	24	26	27	38'-11"	E	34	25	26	28	36'-10"	E	34	25	27	28	35'-0"	E	35	26	27	28
Double 12 G Steel C	L18/L8	40'-0"	C	30	23	24	25	40'-0"	D	31	24	25	26	40'-0"	E	33	24	26	27	40'-0"	E	34	25	27	28	40'-0"	E	35	26	27	29	40'-0"	F	36	26	28	29

Header	Detail	trib 6'	Min Post Type	Uplift Footing (in)	8'	10'	12'	trib 6.5'	Min Post Type	Uplift Footing (in)	8'	10'	12'	trib 7'	Min Post Type	Uplift Footing (in)	8'	10'	12'	trib 7.5'	Min Post Type	Uplift Footing (in)	8'	10'	12'	trib 8'	Min Post Type	Uplift Footing (in)	8'	10'	12'
On Slab	On Slab	11'-4"	A1					10'-5"	A1					9'-8"	A1					9'-1"	A1					8'-6"	A1				
0.042"x3"x8"	L1	10'-0"	A1	24	22	24	25	9'-6"	A1	24	23	24	25	9'-1"	A1	24	23	24	26	8'-8"	A1	24	24	25	26	8'-4"	A1	24	24	25	27
Double 3"x8"	L1/L12	14'-11"	A2	27	22	24	25	14'-3"	A2	27	23	24	25	13'-8"	A3	27	23	24	26	13'-1"	A3	28	24	25	26	12'-7"	A3	28	24	25	27
Double 2"x6.625"	L2/L12	13'-4"	A2	26	22	24	25	12'-8"	A2	26	23	24	25	12'-2"	A2	26	23	24	26	11'-9"	A2	27	24	25	26	11'-3"	A2	27	24	25	27
16 G Steel C	L18	16'-9"	A3	28	22	24	25	15'-10"	A3	28	23	24	25	15'-0"	A3	28	23	24	26	14'-3"	A3	29	24	25	26	13'-7"	A3	29	24	25	27
14 G Steel C	L18	20'-3"	C	30	23	24	25	19'-2"	C	30	23	24	25	18'-2"	C	30	23	24	26	17'-4"	C	30	24	25	26	16'-7"	D	31	24	25	27
12 G Steel C	L18	29'-8"	E	34	25	27	28	28'-2"	E	34	25	27	28	26'-10"	E	34	25	27	28	25'-9"	E	35	26	27	28	24'-8"	E	35	26	27	29
Double 16 G Steel C	L18/L8	29'-6"	E	34	25	26	28	28'-3"	E	34	25	27	28	27'-1"	E	35	25	27	28	26'-1"	E	35	26	27	28	25'-3"	F	35	26	27	29
Double 14 G Steel C	L18/L8	33'-11"	F	35	26	27	29	32'-6"	F	36	26	28	29	31'-3"	F	36	26	28	29	30'-1"	G	37	27	28	30	29'-1"	G	37	27	28	30
Double 12 G Steel C	L18/L8	40'-0"	G	37	27	29	30	40'-0"	G	38	28	29	31	40'-0"	H1	39	28	30	31	39'-9"	H1	40	29	30	32	38'-5"	H1	41	29	30	32

Header	Detail	trib 9'	Min Post Type	Uplift Footing (in)	8'	10'	12'	trib 10'	Min Post Type	Uplift Footing (in)	8'	10'	12'	trib 11'	Min Post Type	Uplift Footing (in)	8'	10'	12'	trib 12'	Min Post Type	Uplift Footing (in)	8'	10'	12'	trib 13'	Min Post Type	Uplift Footing (in)	8'	10'	12'
On Slab	On Slab	7'-6"	A1					6'-9"	A1					6'-2"	A1					5'-8"	A1					5'-2"	A1				
0.042"x3"x8"	L1	7'-9"	A1	25	25	26	27	7'-3"	A1	25	25	27	28	6'-9"	A1	25	26	27	29	6'-5"	A1	26	27	28	29	6'-1"	A1	26	27	29	30
Double 3"x8"	L1/L12	11'-10"	A3	29	25	26	27	11'-2"	A3	29	25	27	28	10'-6"	C	29	26	27	29	10'-0"	C	30	27	28	29	9'-6"	C	30	27	29	30
Double 2"x6.625"	L2/L12	10'-8"	A3	28	25	26	27	10'-0"	A3	28	25	27	28	9'-6"	A3	28	26	27	29	9'-1"	A3	29	27	28	29	8'-8"	A3	29	27	29	30
16 G Steel C	L18	12'-8"	B	29	25	26	27	11'-8"	C	29	25	27	28	10'-10"	C	30	26	27	29	10'-3"	C	30	27	28	29	9'-8"	C	30	27	29	30
14 G Steel C	L18	15'-5"	D	31	25	26	27	14'-3"	D	31	25	27	28	13'-4"	D	32	26	27	29	12'-8"	E	32	27	28	29	11'-11"	E	32	27	29	30
12 G Steel C	L18	23'-2"	F	36	26	28	29	21'-7"	F	36	26	28	29	20'-3"	G	36	27	28	29	19'-4"	G	37	27	28	30	18'-4"	G	37	27	29	30
Double 16 G Steel C	L18/L8	23'-11"	F	36	26	28	29	22'-6"	G	37	27	28	29	21'-4"	G	37	27	28	30	20'-6"	G	38	27	29	30	19'-7"	G	38	27	29	30
Double 14 G Steel C	L18/L8	27'-7"	G	38	27	29	30	26'-1"	G	38	28	29	31	24'-9"	G	39	28	30	31	23'-10"	H1	40	28	30	31	22'-9"	H1	40	29	30	32
Double 12 G Steel C	L18/L8	36'-6"	H1	41	29	31	32	34'-6"	H1	42	30	31	33	32'-10"	H1	43	30	32	33	31'-7"	H1	43	30	32	34	30'-3"	H2	44	31	32	34

Header	Detail	trib 14'	Min Post Type	Uplift Footing (in)	8'	10'	12'	trib 15'	Min Post Type	Uplift Footing (in)	8'	10'	12'	trib 16'	Min Post Type	Uplift Footing (in)	8'	10'	12'	trib 17'	Min Post Type	Uplift Footing (in)	8'	10'	12'	trib 18'	Min Post Type	Uplift Footing (in)	8'	10'	12'
On Slab	On Slab	4'-10"	A1					4'-6"	A1					4'-3"	A1					4'-0"	A1					3'-9"	A1				
0.042"x3"x8"	L1	5'-9"	A2	26	28	29	31	5'-6"	A2	26	28	30	31	5'-3"	A2	26	29	30	32	5'-0"	A2	27	29	31	32	4'-9"	A2	27	29	31	33
Double 3"x8"	L1/L12	9'-1"	C	30	28	29	31	8'-9"	D	31	28	30	31	8'-5"	D	31	29	30	32	8'-1"	D	31	29	31	32	7'-9"	D	31	29	31	33
Double 2"x6.625"	L2/L12	8'-3"	C	29	28	29	31	8'-0"	C	30	28	30	31	7'-8"	C	30	29	30	32	7'-5"	C	30	29	31	32	7'-2"	C	30	29	31	33
16 G Steel C	L18	8'-11"	C	30	28	29	31	8'-5"	C	30	28	30	31	7'-10"	C	30	29	30	32	7'-5"	C	30	29	31	32	7'-0"	C	30	29	31	33
14 G Steel C	L18	11'-3"	E	32	28	29	31	10'-9"	E	33	28	30	31	10'-3"	E	33	29	30	32	9'-10"	E	33	29	31	32	9'-5"	E	33	29	31	33
12 G Steel C	L18	17'-5"	G	38	28	29	31	16'-9"	G	38	28	30	31	16'-0"	G	38	29	30	32	15'-5"	G	38	29	31	32	14'-10"	G	39	29	31	33
Double 16 G Steel C	L18/L8	18'-9"	G	39	28	29	31	18'-2"	G	39	28	30	31	17'-6"	H1	39	29	30	32	17'-0"	H1	40	29	31	32	16'-5"	H1	40	29	31	33
Double 14 G Steel C	L18/L8	21'-11"	H1	41	29	30	32	21'-2"	H1	41	29	31	32	20'-5"	H1	41	29	31	32	19'-11"	H1	42	30	31	33	19'-3"	H1	42	30	31	33
Double 12 G Steel C	L18/L8	29'-1"	H2	45	31	33	34	28'-3"	H2	45	31	33	35	27'-3"	H2	46	31	33	35	26'-7"	H2	46	32	34	35	25'-9"	H2	47	32	34	35

Amerimax Exterior Home Products
28921 US Hwy 74
Romoland, CA 92585

Carl Putnam, P. E.
3441 Ivylink Place
Lynchburg, VA 24503
carlputnam@comcast.net

Ground Snow Load: 10 psf · Live Load: 10 psf · Wind Speed: 110 MPH EXPOSURE C or 130 MPH EXPOSURE B · Seismic Ss= 150% · Seismic Design Category D · Freestanding Structures

Table 2.3b (columns 8', 10', 12' = cubic footing "d" Constrained Footing (in), Max Post Length)

Header	Detail	trib 3'	Min Post Type	Uplift Footing (in)	8'	10'	12'	trib 3.5'	Min Post Type	Uplift Footing (in)	8'	10'	12'	trib 4'	Min Post Type	Uplift Footing (in)	8'	10'	12'	trib 4.5'	Min Post Type	Uplift Footing (in)	8'	10'	12'	trib 5'	Min Post Type	Uplift Footing (in)	8'	10'	12'	trib 5.5'	Min Post Type	Uplift Footing (in)	8'	10'	12'
On Slab	On Slab	n/a	A1					n/a	A1					n/a	A1					n/a	A1					n/a	A1					n/a	A1				
0.042"x3"x8"	L1	14'-11"	A1	19	29	30	32	13'-8"	A1	19	28	30	31	12'-7"	A1	19	27	29	30	12'-0"	A1	20	27	29	30	11'-3"	A1	20	27	28	29	10'-7"	A1	20	26	28	29
Double 3"x8"	L1/L12	21'-8"	A1	21	31	33	35	19'-10"	A1	22	31	32	34	18'-5"	A1	22	30	32	33	17'-8"	A1	23	30	31	33	16'-7"	A2	23	29	31	32	15'-8"	A2	23	29	31	32
Double 2"x6.625"	L2/L12	19'-2"	A1	20	29	31	32	17'-7"	A1	21	28	30	31	16'-4"	A1	21	28	29	31	15'-8"	A1	22	28	29	31	14'-9"	A1	22	27	29	30	14'-0"	A1	22	27	28	30
16 G Steel C	L18	26'-4"	A1	23	33	35	37	23'-9"	A2	23	32	34	36	21'-9"	A2	23	31	33	35	20'-7"	A2	24	31	33	34	19'-1"	A3	24	30	32	34	17'-10"	A3	24	30	32	33
14 G Steel C	L18	31'-4"	A2	24	34	36	38	28'-4"	A3	24	34	36	37	26'-0"	A3	25	33	35	36	24'-8"	A3	25	32	34	36	22'-11"	B	26	32	34	35	21'-6"	C	26	31	33	35
12 G Steel C	L18	40'-0"	C	26	37	39	41	40'-0"	D	27	37	39	41	37'-4"	D	28	36	38	40	35'-7"	E	29	36	38	39	33'-3"	E	29	35	37	39	31'-4"	E	29	34	36	38
Double 16 G Steel C	L18/L8	40'-0"	C	26	37	39	41	38'-9"	D	27	36	38	40	36'-1"	D	28	36	38	40	34'-7"	E	28	35	37	39	32'-8"	E	29	35	37	39	30'-11"	E	29	34	36	38
Double 14 G Steel C	L18/L8	40'-0"	C	26	37	39	41	40'-0"	D	27	37	39	41	40'-0"	E	29	37	39	41	39'-8"	E	30	37	39	40	37'-6"	E	30	36	38	40	35'-7"	E	31	36	38	39
Double 12 G Steel C	L18/L8	40'-0"	C	26	37	39	41	40'-0"	D	27	37	39	41	40'-0"	E	29	37	39	41	40'-0"	E	30	37	39	41	40'-0"	E	31	37	39	41	40'-0"	F	32	37	39	41

Header	Detail	trib 6'	Min Post Type	Uplift Footing (in)	8'	10'	12'	trib 6.5'	Min Post Type	Uplift Footing (in)	8'	10'	12'	trib 7'	Min Post Type	Uplift Footing (in)	8'	10'	12'	trib 7.5'	Min Post Type	Uplift Footing (in)	8'	10'	12'	trib 8'	Min Post Type	Uplift Footing (in)	8'	10'	12'
On Slab	On Slab	n/a	A1					n/a	A1					n/a	A1					n/a	A1					n/a	A1				
0.042"x3"x8"	L1	10'-0"	A1	21	26	27	29	9'-8"	A1	21	26	27	28	9'-3"	A1	21	25	27	28	8'-10"	A1	21	25	26	28	8'-5"	A1	21	25	26	27
Double 3"x8"	L1/L12	14'-11"	A2	24	29	30	32	14'-5"	A2	24	28	30	31	13'-10"	A3	24	28	30	31	13'-3"	A3	24	28	29	31	12'-9"	A3	25	27	29	30
Double 2"x6.625"	L2/L12	13'-4"	A2	23	26	28	29	12'-11"	A2	23	26	28	29	12'-4"	A2	23	26	27	29	11'-10"	A2	24	26	27	28	11'-5"	A2	24	25	27	28
16 G Steel C	L18	16'-9"	A3	25	29	31	33	16'-1"	A3	25	29	31	32	15'-3"	A3	25	29	30	32	14'-6"	A3	25	28	30	31	13'-10"	A3	25	28	30	31
14 G Steel C	L18	20'-3"	C	26	31	33	34	19'-6"	C	26	31	32	34	18'-6"	C	27	30	32	33	17'-7"	D	27	30	31	33	16'-10"	D	27	29	31	33
12 G Steel C	L18	29'-8"	E	30	34	36	38	28'-8"	E	30	34	36	37	27'-3"	E	30	33	35	37	26'-1"	E	31	33	35	36	25'-0"	E	31	33	34	36
Double 16 G Steel C	L18/L8	29'-6"	E	30	34	36	38	28'-8"	E	30	34	36	37	27'-6"	E	30	33	35	37	26'-5"	E	31	33	35	37	25'-6"	F	31	33	35	36
Double 14 G Steel C	L18/L8	33'-11"	F	31	35	37	39	33'-0"	F	32	35	37	39	31'-8"	G	32	35	37	38	30'-6"	G	32	34	36	38	29'-5"	G	33	34	36	38
Double 12 G Steel C	L18/L8	40'-0"	G	33	37	39	41	40'-0"	G	34	37	39	41	40'-0"	H1	34	37	39	41	40'-0"	H1	35	37	39	41	38'-11"	H1	36	36	38	40

Header	Detail	trib 9'	Min Post Type	Uplift Footing (in)	8'	10'	12'	trib 10'	Min Post Type	Uplift Footing (in)	8'	10'	12'	trib 11'	Min Post Type	Uplift Footing (in)	8'	10'	12'	trib 12'	Min Post Type	Uplift Footing (in)	8'	10'	12'	trib 13'	Min Post Type	Uplift Footing (in)	8'	10'	12'
On Slab	On Slab	n/a	A1					n/a	A1					n/a	A1					n/a	A1					n/a	A1				
0.042"x3"x8"	L1	7'-11"	A1	22	24	26	27	7'-4"	A1	22	24	26	27	6'-11"	A1	22	25	26	28	6'-6"	A1	23	26	27	28	6'-2"	A2	23	26	28	29
Double 3"x8"	L1/L12	12'-0"	A3	25	27	29	30	11'-3"	A3	25	27	28	29	10'-8"	C	26	26	28	29	10'-1"	C	26	26	27	29	9'-8"	C	26	26	28	29
Double 2"x6.625"	L2/L12	10'-9"	A3	24	25	26	28	10'-1"	A3	25	25	26	27	9'-8"	A3	25	25	26	28	9'-2"	A3	25	26	27	28	8'-9"	B	26	26	28	29
16 G Steel C	L18	12'-10"	C	26	27	29	30	11'-10"	C	26	27	28	30	11'-1"	C	26	26	28	29	10'-5"	C	26	26	28	29	9'-10"	C	27	26	28	29
14 G Steel C	L18	15'-8"	D	27	29	31	32	14'-6"	D	28	28	30	31	13'-8"	D	28	28	30	31	12'-9"	E	28	27	29	30	12'-2"	E	28	27	29	30
12 G Steel C	L18	23'-5"	F	31	32	34	35	21'-10"	F	32	31	33	35	20'-8"	G	32	31	33	34	19'-6"	G	32	31	32	34	18'-7"	G	33	30	32	33
Double 16 G Steel C	L18/L8	24'-2"	F	32	32	34	36	22'-9"	G	32	32	34	35	21'-9"	G	33	31	33	35	20'-8"	G	33	31	33	34	19'-10"	G	34	31	32	34
Double 14 G Steel C	L18/L8	27'-11"	G	33	33	35	37	26'-4"	G	34	33	35	36	25'-2"	G	34	33	34	36	24'-0"	H1	35	32	34	36	23'-1"	H1	35	32	34	35
Double 12 G Steel C	L18/L8	36'-11"	H1	36	36	38	40	34'-10"	H1	37	35	37	39	33'-4"	H1	38	35	37	39	31'-10"	H1	38	35	37	38	30'-8"	H2	39	34	36	38

Header	Detail	trib 14'	Min Post Type	Uplift Footing (in)	8'	10'	12'	trib 15'	Min Post Type	Uplift Footing (in)	8'	10'	12'	trib 16'	Min Post Type	Uplift Footing (in)	8'	10'	12'	trib 17'	Min Post Type	Uplift Footing (in)	8'	10'	12'	trib 18'	Min Post Type	Uplift Footing (in)	8'	10'	12'
On Slab	On Slab	n/a	A1					n/a	A1					n/a	A1					n/a	A1					n/a	A1				
0.042"x3"x8"	L1	5'-10"	A2	23	27	28	29	5'-7"	A2	23	27	29	30	5'-4"	A2	23	28	29	31	5'-1"	A2	23	28	30	31	4'-10"	A2	23	28	30	31
Double 3"x8"	L1/L12	9'-3"	C	27	27	28	29	8'-11"	D	27	27	29	30	8'-6"	D	27	28	29	31	8'-2"	D	27	28	30	31	7'-11"	D	28	28	30	31
Double 2"x6.625"	L2/L12	8'-5"	C	26	27	28	29	8'-1"	C	26	27	29	30	7'-9"	C	26	28	29	31	7'-6"	C	27	28	30	31	7'-3"	D	27	28	30	31
16 G Steel C	L18	9'-2"	C	27	27	28	29	8'-7"	C	27	27	29	30	8'-0"	C	27	28	29	31	7'-7"	C	27	28	30	31	7'-2"	C	27	28	30	31
14 G Steel C	L18	11'-5"	E	29	27	28	30	10'-11"	E	29	27	29	30	10'-5"	E	29	28	29	31	10'-0"	E	29	28	30	31	9'-7"	E	29	28	30	31
12 G Steel C	L18	17'-8"	G	33	30	32	33	17'-0"	G	33	29	31	33	16'-3"	G	34	29	31	32	15'-8"	G	34	29	31	32	15'-0"	G	34	29	30	32
Double 16 G Steel C	L18/L8	19'-0"	G	34	30	32	34	18'-5"	G	34	30	32	33	17'-9"	H1	35	30	32	33	17'-2"	H1	35	30	31	33	16'-7"	H1	35	29	31	32
Double 14 G Steel C	L18/L8	22'-2"	H1	36	32	33	35	21'-6"	H1	36	31	33	35	20'-8"	H1	36	31	33	34	20'-1"	H1	37	31	33	34	19'-6"	H1	37	31	32	34
Double 12 G Steel C	L18/L8	29'-6"	H2	39	34	36	38	28'-7"	H2	40	34	36	37	27'-7"	H2	40	33	35	37	26'-10"	H2	41	33	35	37	26'-0"	H2	41	33	35	36

Ground Snow Load: 10 psf · Live Load: 10 psf · Wind Speed: 105 MPH EXPOSURE B · Seismic Ss= 150% · Seismic Design Category D · Structures are Attached to Existing Building

Table 2.3c (columns 8', 10', 12' = cubic footing "d" Constrained Footing (in), Max Post Length)

Header	Detail	trib 3'	Min Post Type	Uplift Footing (in)	8'	10'	12'	trib 3.5'	Min Post Type	Uplift Footing (in)	8'	10'	12'	trib 4'	Min Post Type	Uplift Footing (in)	8'	10'	12'	trib 4.5'	Min Post Type	Uplift Footing (in)	8'	10'	12'	trib 5'	Min Post Type	Uplift Footing (in)	8'	10'	12'	trib 5.5'	Min Post Type	Uplift Footing (in)	8'	10'	12'
On Slab	On Slab	22'-8"	A1					19'-5"	A1					17'-0"	A1					15'-1"	A1					13'-7"	A1					12'-4"	A1				
0.042"x3"x8"	L1	14'-11"	A1	18	18	19	20	13'-8"	A1	19	18	19	20	12'-7"	A1	19	18	19	20	12'-0"	A1	20	18	20	21	11'-3"	A1	20	19	20	21	10'-7"	A1	20	19	21	22
Double 3"x8"	L1/L12	21'-8"	A1	21	19	21	21	19'-10"	A1	21	20	21	22	18'-5"	A1	22	20	21	22	17'-8"	A1	22	20	22	23	16'-7"	A2	23	21	22	23	15'-8"	A2	23	21	22	23
Double 2"x6.625"	L2/L12	19'-2"	A1	20	19	20	21	17'-7"	A1	20	19	20	21	16'-4"	A1	21	19	21	22	15'-8"	A1	21	20	21	22	14'-9"	A1	22	20	21	22	14'-0"	A1	22	20	21	22
16 G Steel C	L18	26'-4"	A1	22	20	22	23	23'-9"	A2	23	21	22	23	21'-9"	A2	23	21	22	23	20'-7"	A2	23	21	22	24	19'-1"	A3	24	21	23	24	17'-10"	A3	24	22	23	24
14 G Steel C	L18	31'-4"	A2	23	21	23	24	28'-4"	A3	24	22	23	24	26'-0"	A3	24	22	23	24	24'-8"	A3	25	22	24	25	22'-11"	B	25	22	24	25	21'-6"	C	25	23	24	25
12 G Steel C	L18	40'-0"	C	25	23	24	25	40'-0"	D	27	24	25	26	37'-4"	D	27	24	25	27	35'-7"	E	28	24	26	27	33'-3"	E	28	25	26	27	31'-4"	E	29	25	26	28
Double 16 G Steel C	L18/L8	40'-0"	C	25	23	24	25	38'-9"	D	27	23	25	26	36'-1"	D	27	24	25	26	34'-7"	E	28	24	26	27	32'-8"	E	28	25	26	27	30'-11"	E	29	25	26	27
Double 14 G Steel C	L18/L8	40'-0"	C	25	23	24	25	40'-0"	D	27	24	25	26	40'-0"	E	28	24	26	27	39'-8"	E	29	25	27	28	37'-6"	E	30	25	27	28	35'-7"	E	30	26	27	28
Double 12 G Steel C	L18/L8	40'-0"	C	25	23	24	25	40'-0"	D	27	24	25	26	40'-0"	E	28	24	26	27	40'-0"	E	29	25	27	28	40'-0"	E	30	26	27	29	40'-0"	F	31	26	28	29

Header	Detail	trib 6'	Min Post Type	Uplift Footing (in)	8'	10'	12'	trib 6.5'	Min Post Type	Uplift Footing (in)	8'	10'	12'	trib 7'	Min Post Type	Uplift Footing (in)	8'	10'	12'	trib 7.5'	Min Post Type	Uplift Footing (in)	8'	10'	12'	trib 8'	Min Post Type	Uplift Footing (in)	8'	10'	12'
On Slab	On Slab	11'-4"	A1					10'-5"	A1					9'-8"	A1					9'-1"	A1					8'-6"	A1				
0.042"x3"x8"	L1	10'-0"	A1	20	20	21	22	9'-8"	A1	21	20	22	23	9'-3"	A1	21	21	22	23	8'-10"	A1	21	21	22	23	8'-5"	A1	21	21	23	24
Double 3"x8"	L1/L12	14'-11"	A2	23	21	22	23	14'-5"	A2	23	21	23	24	13'-10"	A3	24	21	23	24	13'-3"	A3	24	22	23	24	12'-9"	A3	24	22	23	24
Double 2"x6.625"	L2/L12	13'-4"	A2	22	20	22	23	12'-11"	A2	23	21	22	23	12'-4"	A2	23	21	22	23	11'-10"	A2	23	21	22	23	11'-5"	A2	23	21	23	24
16 G Steel C	L18	16'-9"	A3	24	22	23	24	16'-1"	A3	24	22	23	24	15'-3"	A3	24	22	23	24	14'-6"	A3	25	22	23	25	13'-10"	A3	25	22	23	25
14 G Steel C	L18	20'-3"	C	26	23	24	25	19'-6"	C	26	23	24	25	18'-6"	C	26	23	24	26	17'-7"	D	26	23	25	26	16'-10"	D	26	23	25	26
12 G Steel C	L18	29'-8"	E	29	25	27	28	28'-8"	E	29	25	27	28	27'-3"	E	30	26	27	28	26'-1"	E	30	26	27	28	25'-0"	E	30	26	27	29
Double 16 G Steel C	L18/L8	29'-6"	E	29	25	26	28	28'-8"	E	29	25	27	28	27'-6"	E	30	26	27	28	26'-5"	E	30	26	27	29	25'-6"	F	30	26	27	29
Double 14 G Steel C	L18/L8	33'-11"	F	30	26	27	29	33'-0"	F	31	26	28	29	31'-8"	G	31	26	28	29	30'-6"	G	32	27	28	30	29'-5"	G	32	27	28	30
Double 12 G Steel C	L18/L8	40'-0"	G	32	27	29	30	40'-0"	G	33	28	29	31	40'-0"	H1	34	28	30	31	40'-0"	H1	35	29	30	32	38'-11"	H1	35	29	31	32

Header	Detail	trib 9'	Min Post Type	Uplift Footing (in)	8'	10'	12'	trib 10'	Min Post Type	Uplift Footing (in)	8'	10'	12'	trib 11'	Min Post Type	Uplift Footing (in)	8'	10'	12'	trib 12'	Min Post Type	Uplift Footing (in)	8'	10'	12'	trib 13'	Min Post Type	Uplift Footing (in)	8'	10'	12'
On Slab	On Slab	7'-6"	A1					6'-9"	A1					6'-2"	A1					5'-8"	A1					5'-2"	A1				
0.042"x3"x8"	L1	7'-11"	A1	21	22	23	24	7'-4"	A1	22	23	24	25	6'-11"	A1	22	23	25	26	6'-6"	A1	22	24	25	26	6'-2"	A1	22	24	26	27
Double 3"x8"	L1/L12	12'-0"	A1	25	22	23	24	11'-3"	A1	25	23	24	25	10'-8"	A1	25	23	25	26	10'-1"	A1	26	24	25	26	9'-8"	A1	26	24	26	27
Double 2"x6.625"	L2/L12	10'-9"	A1	24	22	23	24	10'-1"	A1	24	23	24	25	9'-8"	A1	24	23	25	26	9'-2"	A1	25	24	25	26	8'-9"	A1	25	24	26	27
16 G Steel C	L18	12'-10"	A1	25	22	24	25	11'-10"	A1	25	23	24	25	11'-1"	A1	26	23	25	26	10'-5"	A1	26	24	25	26	9'-10"	A1	26	24	26	27
14 G Steel C	L18	15'-8"	A1	27	24	25	26	14'-6"	A1	27	24	25	26	13'-8"	A1	27	24	25	27	12'-9"	A1	28	24	26	27	12'-2"	A1	28	24	26	27
12 G Steel C	L18	23'-5"	A1	31	26	28	29	21'-10"	A1	31	26	28	29	20'-8"	A2	32	27	28	30	19'-6"	A2	32	27	28	30	18'-7"	A2	32	27	29	30
Double 16 G Steel C	L18/L8	24'-2"	A1	31	26	28	29	22'-9"	A1	31	27	28	30	21'-9"	A2	32	27	29	30	20'-8"	A2	32	27	29	30	19'-10"	A3	33	28	29	31
Double 14 G Steel C	L18/L8	27'-11"	A2	33	27	29	30	26'-4"	A2	33	28	29	31	25'-2"	A3	34	28	30	31	24'-0"	A3	34	28	30	31	23'-1"	C	35	29	30	32
Double 12 G Steel C	L18/L8	36'-11"	A3	36	29	31	33	34'-10"	C	36	30	31	33	33'-4"	D	37	30	32	33	31'-10"	D	37	30	32	34	30'-8"	E	38	31	33	34

Header	Detail	trib 14'	Min Post Type	Uplift Footing (in)	8'	10'	12'	trib 15'	Min Post Type	Uplift Footing (in)	8'	10'	12'	trib 16'	Min Post Type	Uplift Footing (in)	8'	10'	12'	trib 17'	Min Post Type	Uplift Footing (in)	8'	10'	12'	trib 18'	Min Post Type	Uplift Footing (in)	8'	10'	12'
On Slab	On Slab	4'-10"	A1					4'-6"	A1					4'-3"	A1					4'-0"	A1					3'-9"	A1				
0.042"x3"x8"	L1	5'-10"	A1	22	25	26	27	5'-7"	A1	23	25	27	28	5'-4"	A1	23	26	27	28	5'-1"	A1	23	26	27	29	4'-10"	A1	23	26	28	29
Double 3"x8"	L1/L12	9'-3"	A1	26	25	26	27	8'-11"	A1	26	25	27	28	8'-6"	A1	27	26	27	28	8'-2"	A1	27	26	27	29	7'-11"	A1	27	26	28	29
Double 2"x6.625"	L2/L12	8'-5"	A1	25	25	26	27	8'-1"	A1	26	25	27	28	7'-9"	A1	26	26	27	28	7'-6"	A1	26	26	27	29	7'-3"	A1	26	26	28	29
16 G Steel C	L18	9'-2"	A1	26	25	26	27	8'-7"	A1	26	25	27	28	8'-0"	A1	26	26	27	28	7'-7"	A1	26	26	27	29	7'-2"	A1	26	26	28	29
14 G Steel C	L18	11'-5"	A1	28	25	26	27	10'-11"	A1	28	25	27	28	10'-5"	A1	28	26	27	28	10'-0"	A1	29	26	27	29	9'-7"	A1	29	26	28	29
12 G Steel C	L18	17'-8"	A3	32	27	29	30	17'-0"	A3	33	27	29	30	16'-3"	A3	33	28	29	31	15'-8"	A3	33	28	29	31	15'-0"	B	33	28	30	31
Double 16 G Steel C	L18/L8	19'-0"	A3	33	28	29	31	18'-5"	A3	34	28	30	31	17'-9"	C	34	28	30	31	17'-2"	C	34	28	30	32	16'-7"	C	35	29	30	32
Double 14 G Steel C	L18/L8	22'-2"	C	35	29	31	32	21'-6"	C	35	29	31	32	20'-8"	D	36	29	31	33	20'-1"	D	36	30	31	33	19'-6"	D	36	30	32	33
Double 12 G Steel C	L18/L8	29'-6"	E	38	31	33	34	28'-7"	E	39	31	33	35	27'-7"	E	39	32	33	35	26'-10"	E	40	32	34	35	26'-0"	E	40	32	34	36

Registered Professional Engineer (Civil)
CERTIFICATE NO. 39702
CARL PUTNAM
Date Signed
ARIZONA U.S.A.
Expires 09/30/2024

JAN 20 2023

SECTION 2.0 POST SPACING, POST TYPE AND FOOTING SIZE FOR LATTICE COVERS

Roof Solidity: 60%

Ground Snow Load: 10 psf | **Live Load: 10 psf** | **Wind Speed: 115 MPH EXPOSURE C or 130 MPH EXPOSURE B** | **Seismic Ss= 150%** | **Seismic Design Category D** | **Structures are Attached to Existing Building**

Table 2.4a (cubic footing "d" — Constrained Footing (in) — Max Post Length 8', 10', 12')

Header	Detail	3' trib	Min Post Type	Uplift Footing (in)	8'	10'	12'	3.5' trib	Min Post Type	Uplift Footing (in)	8'	10'	12'	4' trib	Min Post Type	Uplift Footing (in)	8'	10'	12'	4.5' trib	Min Post Type	Uplift Footing (in)	8'	10'	12'	5' trib	Min Post Type	Uplift Footing (in)	8'	10'	12'
On Slab	On Slab	22'-8"	A1					19'-5"	A1					17'-0"	A1					15'-1"	A1					13'-7"	A1				
0.042"x3"x8"	L1	14'-0"	A1	22	19	20	21	12'-11"	A1	22	20	21	22	12'-0"	A1	23	20	22	23	11'-3"	A1	23	21	22	23	10'-7"	A1	23	22	23	24
Double 3"x8"	L1/L12	20'-5"	A1	24	19	20	21	18'-11"	A1	25	20	21	22	17'-8"	A1	26	20	22	23	16'-7"	A1	26	21	22	23	15'-8"	A1	27	22	23	24
Double 2"x6.625"	L2/L12	18'-1"	A1	23	19	20	21	16'-9"	A1	24	20	21	22	15'-8"	A1	25	20	22	23	14'-9"	A1	25	21	22	23	14'-0"	A1	26	22	23	24
16 G Steel C	L18	24'-7"	A1	26	20	21	22	22'-4"	A1	27	20	22	23	20'-7"	A2	27	21	22	23	19'-1"	A2	27	21	22	23	17'-10"	A2	28	22	23	24
14 G Steel C	L18	29'-3"	A2	28	21	22	23	26'-8"	A2	28	21	23	24	24'-8"	A3	29	22	23	24	22'-11"	A3	29	22	23	24	21'-6"	A3	29	22	23	24
12 G Steel C	L18	40'-0"	C	31	23	24	25	38'-4"	D	32	23	25	26	35'-7"	D	32	24	25	26	33'-3"	D	33	24	25	27	31'-4"	E	33	24	26	27
Double 16 G Steel C	L18/L8	39'-10"	C	31	23	24	25	36'-11"	C	31	23	24	26	34'-7"	D	32	23	25	26	32'-8"	D	33	24	25	26	30'-11"	E	33	24	26	27
Double 14 G Steel C	L18/L8	40'-0"	C	31	23	24	25	40'-0"	D	32	24	25	26	39'-8"	E	34	24	26	27	37'-6"	E	34	25	26	27	35'-7"	E	35	25	27	28
Double 12 G Steel C	L18/L8	40'-0"	C	31	23	24	25	40'-0"	D	32	24	25	26	40'-0"	E	34	24	26	27	40'-0"	E	35	25	27	28	40'-0"	E	36	26	27	29

Header	Detail	5.5' trib	Min Post Type	Uplift Footing (in)	8'	10'	12'	6' trib	Min Post Type	Uplift Footing (in)	8'	10'	12'	6.5' trib	Min Post Type	Uplift Footing (in)	8'	10'	12'	7' trib	Min Post Type	Uplift Footing (in)	8'	10'	12'	7.5' trib	Min Post Type	Uplift Footing (in)	8'	10'	12'	8' trib	Min Post Type	Uplift Footing (in)	8'	10'	12'
On Slab	On Slab	12'-4"	A1					11'-4"	A1					10'-5"	A1					9'-8"	A1					9'-1"	A1					8'-6"	A1				
0.042"x3"x8"	L1	9'-10"	A1	23	22	24	25	9'-4"	A1	24	23	24	25	8'-11"	A1	24	23	25	26	8'-7"	A1	24	24	25	26	8'-2"	A1	25	24	25	27	7'-11"	A1	25	24	26	27
Double 3"x8"	L1/L12	14'-8"	A2	27	22	24	25	14'-0"	A2	27	23	24	25	13'-5"	A2	28	23	25	26	12'-11"	A2	28	24	25	26	12'-5"	A2	28	24	25	27	12'-0"	A3	28	24	26	27
Double 2"x6.625"	L2/L12	13'-1"	A1	26	22	24	25	12'-6"	A1	26	23	24	25	12'-0"	A1	27	23	25	26	11'-7"	A2	27	24	25	26	11'-2"	A2	27	24	25	27	10'-9"	A2	27	24	26	27
16 G Steel C	L18	16'-5"	A2	28	22	24	25	15'-6"	A2	28	23	24	25	14'-9"	A3	28	23	25	26	14'-0"	A3	29	24	25	26	13'-5"	A3	29	24	25	27	12'-10"	A3	29	24	26	27
14 G Steel C	L18	19'-10"	A3	30	22	24	25	18'-10"	B	30	23	24	25	17'-10"	C	30	23	25	26	17'-1"	C	31	24	25	26	16'-4"	C	31	24	25	27	15'-8"	C	31	24	26	27
12 G Steel C	L18	29'-2"	E	34	24	26	27	27'-9"	E	34	25	26	27	26'-6"	E	34	25	26	28	25'-4"	E	35	25	27	28	24'-4"	E	35	25	27	28	23'-5"	E	35	25	27	28
Double 16 G Steel C	L18/L8	29'-1"	E	34	24	26	27	27'-10"	E	34	25	26	27	26'-9"	E	35	25	26	28	25'-10"	E	35	25	27	28	24'-11"	E	35	25	27	28	24'-2"	E	36	26	27	28
Double 14 G Steel C	L18/L8	33'-5"	E	35	25	27	28	32'-1"	E	36	26	27	28	30'-10"	E	36	26	27	29	29'-9"	F	37	26	28	29	28'-9"	F	37	26	28	29	27'-11"	G	38	27	28	29
Double 12 G Steel C	L18/L8	40'-0"	F	37	26	28	29	40'-0"	G	39	27	29	30	40'-0"	G	40	28	29	31	39'-4"	G	40	28	30	31	38'-1"	H1	41	28	30	31	36'-11"	H1	41	28	30	32

Header	Detail	9' trib	Min Post Type	Uplift Footing (in)	8'	10'	12'	10' trib	Min Post Type	Uplift Footing (in)	8'	10'	12'	11' trib	Min Post Type	Uplift Footing (in)	8'	10'	12'	12' trib	Min Post Type	Uplift Footing (in)	8'	10'	12'	13' trib	Min Post Type	Uplift Footing (in)	8'	10'	12'
On Slab	On Slab	7'-6"	A1					6'-9"	A1					6'-2"	A1					5'-8"	A1					5'-2"	A1				
0.042"x3"x8"	L1	7'-4"	A1	25	25	27	28	6'-10"	A1	25	26	27	29	6'-4"	A1	26	27	28	29	6'-0"	A1	26	27	29	30	5'-8"	A1	26	28	29	31
Double 3"x8"	L1/L12	11'-3"	A3	29	25	27	28	10'-7"	A3	29	26	27	29	9'-11"	A3	30	27	28	29	9'-5"	B	30	27	29	30	9'-0"	C	30	28	29	31
Double 2"x6.625"	L2/L12	10'-1"	A2	28	25	27	28	9'-7"	A3	28	26	27	29	9'-0"	A3	29	27	28	29	8'-7"	A3	29	27	29	30	8'-2"	A3	29	28	29	31
16 G Steel C	L18	11'-10"	A3	29	25	27	28	11'-0"	A3	30	26	27	29	10'-2"	A3	30	27	28	29	9'-7"	B	30	27	29	30	8'-10"	B	30	28	29	31
14 G Steel C	L18	14'-6"	D	31	25	27	28	13'-6"	D	32	26	27	29	12'-6"	D	32	27	28	29	11'-9"	D	32	27	29	30	11'-2"	D	33	28	29	31
12 G Steel C	L18	21'-10"	E	36	26	27	28	20'-6"	F	37	26	27	29	19'-2"	F	37	27	28	29	18'-2"	F	37	27	29	30	17'-3"	G	38	28	29	31
Double 16 G Steel C	L18/L8	22'-9"	F	37	26	27	29	21'-6"	F	37	26	28	29	20'-4"	G	38	27	28	29	19'-5"	G	38	27	29	30	18'-8"	G	39	28	29	31
Double 14 G Steel C	L18/L8	26'-4"	G	38	27	29	30	25'-0"	G	39	27	29	30	23'-7"	G	40	28	29	31	22'-7"	G	40	28	30	31	21'-9"	H1	41	28	30	31
Double 12 G Steel C	L18/L8	34'-10"	H1	42	29	31	32	33'-1"	H1	43	29	31	33	31'-4"	H1	43	30	31	33	30'-1"	H1	44	30	32	33	28'-11"	H1	45	30	32	34

Header	Detail	14' trib	Min Post Type	Uplift Footing (in)	8'	10'	12'	15' trib	Min Post Type	Uplift Footing (in)	8'	10'	12'	16' trib	Min Post Type	Uplift Footing (in)	8'	10'	12'	17' trib	Min Post Type	Uplift Footing (in)	8'	10'	12'	18' trib	Min Post Type	Uplift Footing (in)	8'	10'	12'
On Slab	On Slab	4'-10"	A1					4'-6"	A1					4'-3"	A1					4'-0"	A1					3'-9"	A1				
0.042"x3"x8"	L1	5'-5"	A1	26	28	30	31	5'-2"	A1	26	29	30	32	4'-10"	A1	27	29	31	32	4'-8"	A2	27	30	31	33	4'-5"	A2	27	30	32	33
Double 3"x8"	L1/L12	8'-7"	C	31	28	30	31	8'-3"	C	31	29	30	32	7'-11"	C	31	29	31	32	7'-7"	C	31	30	31	33	7'-4"	D	32	30	32	33
Double 2"x6.625"	L2/L12	7'-10"	A3	30	28	30	31	7'-7"	B	30	29	30	32	7'-3"	C	30	29	31	32	7'-0"	C	31	30	31	33	6'-9"	C	31	30	32	33
16 G Steel C	L18	8'-3"	C	30	28	30	31	7'-8"	C	30	29	30	32	7'-2"	B	30	29	31	32	6'-9"	B	30	30	31	33	6'-5"	C	30	30	32	33
14 G Steel C	L18	10'-7"	D	33	28	30	31	10'-1"	E	33	29	30	32	9'-7"	E	33	29	31	32	9'-1"	E	33	30	31	33	8'-8"	E	33	30	32	33
12 G Steel C	L18	16'-6"	G	38	28	30	31	15'-9"	G	38	29	30	32	15'-0"	G	39	29	31	32	14'-5"	G	39	30	31	33	13'-11"	G	39	30	32	33
Double 16 G Steel C	L18/L8	17'-11"	G	39	28	30	31	17'-4"	G	40	29	30	32	16'-7"	G	40	29	31	32	16'-1"	G	40	30	31	33	15'-7"	H1	41	30	32	33
Double 14 G Steel C	L18/L8	20'-11"	H1	41	28	30	32	20'-3"	H1	42	29	30	32	19'-6"	H1	42	29	31	32	18'-11"	H1	42	30	31	33	18'-4"	H1	43	30	32	33
Double 12 G Steel C	L18/L8	27'-11"	H2	45	31	32	34	27'-0"	H2	46	31	33	34	26'-0"	H2	46	31	33	34	25'-3"	H2	47	31	33	35	24'-7"	H2	47	32	33	35

Amerimax Exterior Home Products
28921 US Hwy 74
Romoland, CA 92585

Carl Putnam, P. E.
3441 Ivylink Place
Lynchburg, VA 24503
carlputnam@comcast.net

Ground Snow Load: 10 psf | **Live Load: 10 psf** | **Wind Speed: 115 MPH EXPOSURE C or 130 MPH EXPOSURE B** | **Seismic Ss= 150%** | **Seismic Design Category D** | **Freestanding Structures**

Table 2.4b (cubic footing "d" — Constrained Footing (in) — Max Post Length 8', 10', 12')

Header	Detail	3' trib	Min Post Type	Uplift Footing (in)	8'	10'	12'	3.5' trib	Min Post Type	Uplift Footing (in)	8'	10'	12'	4' trib	Min Post Type	Uplift Footing (in)	8'	10'	12'	4.5' trib	Min Post Type	Uplift Footing (in)	8'	10'	12'	5' trib	Min Post Type	Uplift Footing (in)	8'	10'	12'
On Slab	On Slab	n/a	A1					n/a	A1					n/a	A1					n/a	A1					n/a	A1				
0.042"x3"x8"	L1	14'-11"	A1	19	29	31	32	13'-8"	A1	20	29	30	32	12'-7"	A1	20	28	30	31	12'-0"	A1	21	28	29	31	11'-3"	A1	21	27	29	30
Double 3"x8"	L1/L12	21'-8"	A1	22	32	34	36	19'-10"	A1	22	31	33	35	18'-5"	A1	23	31	33	34	17'-8"	A1	23	30	32	34	16'-7"	A2	24	30	32	33
Double 2"x6.625"	L2/L12	19'-2"	A1	21	30	31	33	17'-7"	A1	22	29	31	32	16'-4"	A1	22	28	30	32	15'-8"	A1	22	28	30	31	14'-9"	A1	23	28	29	31
16 G Steel C	L18	26'-4"	A1	23	34	36	37	23'-9"	A2	24	33	35	36	21'-9"	A2	24	32	34	36	20'-7"	A2	25	32	33	35	19'-1"	A3	25	31	33	34
14 G Steel C	L18	31'-4"	A2	25	35	37	39	28'-4"	A3	25	34	36	38	26'-0"	A3	26	34	36	37	24'-8"	A3	26	33	35	37	22'-11"	B	26	33	34	36
12 G Steel C	L18	40'-0"	C	27	37	40	41	40'-0"	D	28	37	40	41	37'-4"	D	29	37	39	41	35'-7"	E	30	36	38	40	33'-3"	E	30	36	38	40
Double 16 G Steel C	L18/L8	40'-0"	C	27	37	40	41	38'-9"	D	28	37	39	41	36'-1"	D	29	36	39	40	34'-7"	E	29	36	38	40	32'-8"	E	30	36	38	39
Double 14 G Steel C	L18/L8	40'-0"	C	27	37	40	41	40'-0"	D	28	37	40	41	40'-0"	E	30	37	40	41	39'-8"	E	31	37	40	41	37'-6"	E	31	37	39	41
Double 12 G Steel C	L18/L8	40'-0"	C	27	37	40	41	40'-0"	D	28	37	40	41	40'-0"	E	30	37	40	41	40'-0"	E	31	37	40	41	40'-0"	E	32	37	40	41

Header	Detail	5.5' trib	Min Post Type	Uplift Footing (in)	8'	10'	12'	6' trib	Min Post Type	Uplift Footing (in)	8'	10'	12'	6.5' trib	Min Post Type	Uplift Footing (in)	8'	10'	12'	7' trib	Min Post Type	Uplift Footing (in)	8'	10'	12'	7.5' trib	Min Post Type	Uplift Footing (in)	8'	10'	12'	8' trib	Min Post Type	Uplift Footing (in)	8'	10'	12'
On Slab	On Slab	n/a	A1					n/a	A1					n/a	A1					n/a	A1					n/a	A1					n/a	A1				
0.042"x3"x8"	L1	10'-7"	A1	21	27	28	30	10'-0"	A1	21	26	28	29	9'-8"	A1	22	26	28	29	9'-3"	A1	22	26	27	29	8'-10"	A1	22	26	27	28	8'-5"	A1	22	25	27	28
Double 3"x8"	L1/L12	15'-8"	A2	24	30	31	33	14'-11"	A2	24	29	31	32	14'-5"	A2	25	29	31	32	13'-10"	A3	25	29	30	32	13'-3"	A3	25	28	30	31	12'-9"	A3	25	28	30	31
Double 2"x6.625"	L2/L12	14'-0"	A1	23	27	29	30	13'-4"	A2	23	27	29	30	12'-11"	A2	24	27	28	30	12'-4"	A2	24	27	28	29	11'-10"	A2	24	26	28	29	11'-5"	A2	25	26	28	29
16 G Steel C	L18	17'-10"	A3	25	31	32	34	16'-9"	A3	25	30	32	33	16'-1"	A3	26	30	31	33	15'-3"	A3	26	29	31	33	14'-6"	A3	26	29	31	32	13'-10"	A3	26	29	30	32
14 G Steel C	L18	21'-6"	C	27	32	34	35	20'-3"	C	27	32	33	35	19'-6"	C	27	31	33	35	18'-6"	C	28	31	33	34	17'-7"	D	28	30	32	34	16'-10"	D	28	30	32	33
12 G Steel C	L18	31'-4"	E	30	35	37	39	29'-8"	E	31	35	37	38	28'-8"	E	31	34	36	38	27'-3"	E	31	34	36	38	26'-1"	E	32	34	36	37	25'-0"	E	32	33	35	37
Double 16 G Steel C	L18/L8	30'-11"	E	30	35	37	39	29'-6"	E	31	35	37	38	28'-8"	E	31	34	36	38	27'-6"	E	31	34	36	38	26'-5"	E	32	34	36	37	25'-6"	F	32	33	35	37
Double 14 G Steel C	L18/L8	35'-7"	E	32	36	38	40	33'-11"	F	32	36	38	40	33'-0"	F	33	36	38	40	31'-8"	G	33	35	37	39	30'-6"	G	33	35	37	39	29'-5"	G	34	35	37	38
Double 12 G Steel C	L18/L8	40'-0"	F	33	37	40	41	40'-0"	G	34	37	40	41	40'-0"	G	35	37	40	41	40'-0"	H1	36	37	40	41	40'-0"	H1	36	37	40	41	38'-11"	H1	37	37	39	41

Header	Detail	9' trib	Min Post Type	Uplift Footing (in)	8'	10'	12'	10' trib	Min Post Type	Uplift Footing (in)	8'	10'	12'	11' trib	Min Post Type	Uplift Footing (in)	8'	10'	12'	12' trib	Min Post Type	Uplift Footing (in)	8'	10'	12'	13' trib	Min Post Type	Uplift Footing (in)	8'	10'	12'
On Slab	On Slab	n/a	A1					n/a	A1					n/a	A1					n/a	A1					n/a	A1				
0.042"x3"x8"	L1	7'-11"	A1	23	25	26	28	7'-4"	A1	23	25	26	28	6'-11"	A1	23	26	27	28	6'-6"	A1	23	26	28	29	6'-2"	A2	24	27	28	30
Double 3"x8"	L1/L12	12'-0"	A3	26	28	29	31	11'-3"	A3	26	27	29	30	10'-8"	C	27	27	28	30	10'-1"	C	27	26	28	29	9'-8"	C	27	27	28	30
Double 2"x6.625"	L2/L12	10'-9"	A3	25	26	27	28	10'-1"	A3	25	25	27	28	9'-8"	A3	26	26	27	28	9'-2"	A3	26	26	28	29	8'-9"	B	26	27	28	30
16 G Steel C	L18	12'-10"	C	27	28	30	31	11'-10"	C	27	28	29	30	11'-1"	C	27	27	29	30	10'-5"	C	27	27	28	29	9'-10"	C	27	27	28	30
14 G Steel C	L18	15'-8"	D	28	30	31	33	14'-6"	D	29	29	31	32	13'-8"	D	29	29	30	32	12'-9"	E	29	28	30	31	12'-2"	E	29	28	29	31
12 G Steel C	L18	23'-5"	F	32	33	35	36	21'-10"	F	33	32	34	36	20'-8"	G	33	32	34	35	19'-6"	G	34	31	33	35	18'-7"	G	34	31	33	34
Double 16 G Steel C	L18/L8	24'-2"	F	33	33	35	37	22'-9"	G	33	32	34	36	21'-9"	G	34	32	34	36	20'-8"	G	34	32	34	35	19'-10"	G	35	31	33	35
Double 14 G Steel C	L18/L8	27'-11"	G	34	34	36	38	26'-4"	G	35	34	36	37	25'-2"	G	35	33	35	37	24'-0"	H1	36	33	35	36	23'-1"	H1	36	33	34	36
Double 12 G Steel C	L18/L8	36'-11"	H1	38	37	39	41	34'-10"	H1	38	36	38	40	33'-4"	H1	39	36	38	40	31'-10"	H1	39	35	37	39	30'-8"	H2	40	35	37	39

Header	Detail	14' trib	Min Post Type	Uplift Footing (in)	8'	10'	12'	15' trib	Min Post Type	Uplift Footing (in)	8'	10'	12'	16' trib	Min Post Type	Uplift Footing (in)	8'	10'	12'	17' trib	Min Post Type	Uplift Footing (in)	8'	10'	12'	18' trib	Min Post Type	Uplift Footing (in)	8'	10'	12'
On Slab	On Slab	n/a	A1					n/a	A1					n/a	A1					n/a	A1					n/a	A1				
0.042"x3"x8"	L1	5'-10"	A2	24	27	29	30	5'-7"	A2	24	28	29	31	5'-4"	A2	24	28	30	31	5'-1"	A2	24	29	30	32	4'-10"	A2	24	29	31	32
Double 3"x8"	L1/L12	9'-3"	C	28	27	29	30	8'-11"	D	28	28	29	31	8'-6"	D	28	28	30	31	8'-2"	D	28	29	30	32	7'-11"	D	28	29	31	32
Double 2"x6.625"	L2/L12	8'-5"	C	27	27	29	30	8'-1"	C	27	28	29	31	7'-9"	C	27	28	30	31	7'-6"	C	27	29	30	32	7'-3"	D	28	29	31	32
16 G Steel C	L18	9'-2"	C	27	27	29	30	8'-7"	C	28	28	29	31	8'-0"	C	27	28	30	31	7'-7"	C	28	29	30	32	7'-2"	C	28	29	31	32
14 G Steel C	L18	11'-5"	E	30	27	29	30	10'-11"	E	30	28	29	31	10'-5"	E	30	28	30	31	10'-0"	E	30	29	30	32	9'-7"	E	30	29	31	32
12 G Steel C	L18	17'-8"	G	34	30	32	34	17'-0"	G	35	30	32	33	16'-3"	G	35	30	32	33	15'-8"	G	35	30	31	33	15'-0"	G	35	29	31	32
Double 16 G Steel C	L18/L8	19'-0"	G	35	31	33	34	18'-5"	G	35	31	33	34	17'-9"	H1	36	30	32	34	17'-2"	H1	36	30	32	34	16'-7"	H1	36	30	32	33
Double 14 G Steel C	L18/L8	22'-2"	H1	37	32	34	36	21'-6"	H1	37	32	34	35	20'-8"	H1	38	32	34	35	20'-1"	H1	38	31	33	35	19'-6"	H1	38	31	33	35
Double 12 G Steel C	L18/L8	29'-6"	H2	41	35	37	38	28'-7"	H2	41	34	36	38	27'-7"	H2	41	34	36	38	26'-10"	H2	42	34	36	38	26'-0"	H2	42	34	36	37

Ground Snow Load: 10 psf | **Live Load: 10 psf** | **Wind Speed: 105 MPH EXPOSURE B** | **Seismic Ss= 150%** | **Seismic Design Category D** | **Freestanding Structures**

Table 2.4c (cubic footing "d" — Constrained Footing (in) — Max Post Length 8', 10', 12')

Header	Detail	3' trib	Min Post Type	Uplift Footing (in)	8'	10'	12'	3.5' trib	Min Post Type	Uplift Footing (in)	8'	10'	12'	4' trib	Min Post Type	Uplift Footing (in)	8'	10'	12'	4.5' trib	Min Post Type	Uplift Footing (in)	8'	10'	12'	5' trib	Min Post Type	Uplift Footing (in)	8'	10'	12'
On Slab	On Slab	n/a	A1					n/a	A1					n/a	A1					n/a	A1					n/a	A1				
0.042"x3"x8"	L1	14'-11"	A1	16	25	27	28	13'-8"	A1	17	25	26	27	12'-7"	A1	17	24	26	27	12'-0"	A1	18	24	25	26	11'-3"	A1	18	23	25	26
Double 3"x8"	L1/L12	21'-8"	A1	19	28	29	31	19'-10"	A1	19	27	29	30	18'-5"	A1	19	27	28	29	17'-8"	A1	20	26	28	29	16'-7"	A2	20	26	27	29
Double 2"x6.625"	L2/L12	19'-2"	A1	18	26	27	28	17'-7"	A1	18	25	26	28	16'-4"	A1	19	25	26	27	15'-8"	A1	19	24	26	27	14'-9"	A1	19	24	25	27
16 G Steel C	L18	26'-4"	A1	20	29	31	32	23'-9"	A2	20	28	30	31	21'-9"	A2	21	28	29	31	20'-7"	A2	21	27	29	30	19'-1"	A3	21	27	28	30
14 G Steel C	L18	31'-4"	A2	21	30	32	34	28'-4"	A3	21	30	31	33	26'-0"	A3	22	29	31	32	24'-8"	A3	22	29	30	32	22'-11"	B	22	28	30	31
12 G Steel C	L18	40'-0"	C	23	32	34	36	40'-0"	D	24	32	34	36	37'-4"	D	25	32	34	35	35'-7"	E	25	31	33	35	33'-3"	E	25	31	33	34
Double 16 G Steel C	L18/L8	40'-0"	C	23	32	34	36	38'-9"	D	24	32	34	36	36'-1"	D	24	31	33	35	34'-7"	E	25	31	33	35	32'-8"	E	25	31	32	34
Double 14 G Steel C	L18/L8	40'-0"	C	23	32	34	36	40'-0"	D	24	32	34	36	40'-0"	E	25	32	34	36	39'-8"	E	26	32	34	36	37'-6"	E	26	32	34	35
Double 12 G Steel C	L18/L8	40'-0"	C	23	32	34	36	40'-0"	D	24	32	34	36	40'-0"	E	25	32	34	36	40'-0"	E	26	32	34	36	40'-0"	E	27	32	34	36

Header	Detail	5.5' trib	Min Post Type	Uplift Footing (in)	8'	10'	12'	6' trib	Min Post Type	Uplift Footing (in)	8'	10'	12'	6.5' trib	Min Post Type	Uplift Footing (in)	8'	10'	12'	7' trib	Min Post Type	Uplift Footing (in)	8'	10'	12'	7.5' trib	Min Post Type	Uplift Footing (in)	8'	10'	12'	8' trib	Min Post Type	Uplift Footing (in)	8'	10'	12'
On Slab	On Slab	n/a	A1					n/a	A1					n/a	A1					n/a	A1					n/a	A1					n/a	A1				
0.042"x3"x8"	L1	10'-7"	A1	18	23	24	26	10'-0"	A1	18	23	24	25	9'-8"	A1	18	23	24	25	9'-3"	A1	19	22	24	25	8'-10"	A1	19	22	23	24	8'-5"	A1	19	22	23	24
Double 3"x8"	L1/L12	15'-8"	A2	20	25	27	28	14'-11"	A2	21	25	27	28	14'-5"	A2	21	25	26	28	13'-10"	A3	21	25	26	27	13'-3"	A3	21	24	26	27	12'-9"	A3	22	24	26	27
Double 2"x6.625"	L2/L12	14'-0"	A1	20	24	25	26	13'-4"	A2	20	23	25	26	12'-11"	A2	20	23	24	26	12'-4"	A2	20	23	24	25	11'-10"	A2	21	23	24	25	11'-5"	A2	21	22	24	25
16 G Steel C	L18	17'-10"	A3	21	26	28	29	16'-9"	A3	22	26	27	29	16'-1"	A3	22	26	27	28	15'-3"	A3	22	25	27	28	14'-6"	A3	22	25	26	28	13'-10"	A3	22	25	26	27
14 G Steel C	L18	21'-6"	C	23	28	29	31	20'-3"	C	23	27	29	30	19'-6"	C	23	27	28	30	18'-6"	C	23	27	28	29	17'-7"	D	24	26	28	29	16'-10"	D	24	26	27	29
12 G Steel C	L18	31'-4"	E	26	30	32	34	29'-8"	E	26	30	32	33	28'-8"	E	26	30	31	33	27'-3"	E	27	29	31	33	26'-1"	E	27	29	31	32	25'-0"	E	27	29	30	32
Double 16 G Steel C	L18/L8	30'-11"	E	26	30	32	34	29'-6"	E	26	30	32	33	28'-8"	E	26	30	31	33	27'-6"	E	27	29	31	33	26'-5"	E	27	29	31	32	25'-6"	F	27	29	31	32
Double 14 G Steel C	L18/L8	35'-7"	E	27	31	33	35	33'-11"	F	27	31	33	34	33'-0"	F	28	31	33	34	31'-8"	G	28	30	32	34	30'-6"	G	28	30	32	33	29'-5"	G	29	30	32	33
Double 12 G Steel C	L18/L8	40'-0"	F	28	32	34	36	40'-0"	G	29	32	34	36	40'-0"	G	30	32	34	36	40'-0"	H1	30	32	34	36	40'-0"	H1	31	32	34	36	38'-11"	H1	31	32	34	36

Header	Detail	9' trib	Min Post Type	Uplift Footing (in)	8'	10'	12'	10' trib	Min Post Type	Uplift Footing (in)	8'	10'	12'	11' trib	Min Post Type	Uplift Footing (in)	8'	10'	12'	12' trib	Min Post Type	Uplift Footing (in)	8'	10'	12'	13' trib	Min Post Type	Uplift Footing (in)	8'	10'	12'
On Slab	On Slab	n/a	A1					n/a	A1					n/a	A1					n/a	A1					n/a	A1				
0.042"x3"x8"	L1	7'-11"	A1	19	21	23	24	7'-4"	A1	19	22	23	24	6'-11"	A1	20	22	23	24	6'-6"	A1	20	23	24	25	6'-2"	A1	20	23	24	26
Double 3"x8"	L1/L12	12'-0"	A1	22	24	25	26	11'-3"	A1	22	23	25	26	10'-8"	A1	23	23	24	26	10'-1"	A1	23	23	24	25	9'-8"	A1	23	23	24	26
Double 2"x6.625"	L2/L12	10'-9"	A1	21	22	23	24	10'-1"	A1	22	22	23	24	9'-8"	A1	22	22	23	24	9'-2"	A1	22	23	24	25	8'-9"	A1	22	23	24	26
16 G Steel C	L18	12'-10"	A1	23	24	26	27	11'-10"	A1	23	24	25	26	11'-1"	A1	23	23	25	26	10'-5"	A1	23	23	24	25	9'-10"	A1	23	23	24	26
14 G Steel C	L18	15'-8"	A1	24	25	27	28	14'-6"	A1	24	25	26	28	13'-8"	A1	25	25	26	27	12'-9"	A1	25	24	26	27	12'-2"	A1	25	24	26	27
12 G Steel C	L18	23'-5"	A1	28	28	30	31	21'-10"	A1	28	28	29	31	20'-8"	A2	28	27	29	30	19'-6"	A2	29	27	29	30	18'-7"	A2	29	27	29	30
Double 16 G Steel C	L18/L8	24'-2"	A1	28	28	30	32	22'-9"	A1	28	28	30	31	21'-9"	A2	29	28	29	31	20'-8"	A2	29	27	29	30	19'-10"	A3	29	28	29	31
Double 14 G Steel C	L18/L8	27'-11"	A2	29	29	31	33	26'-4"	A2	30	29	31	32	25'-2"	A3	30	29	30	32	24'-0"	A3	31	28	30	31	23'-1"	C	31	29	30	32
Double 12 G Steel C	L18/L8	36'-11"	A3	32	32	34	35	34'-10"	C	33	31	33	35	33'-4"	D	33	31	33	34	31'-10"	D	34	31	32	34	30'-8"	E	34	31	33	34

Header	Detail	14' trib	Min Post Type	Uplift Footing (in)	8'	10'	12'	15' trib	Min Post Type	Uplift Footing (in)	8'	10'	12'	16' trib	Min Post Type	Uplift Footing (in)	8'	10'	12'	17' trib	Min Post Type	Uplift Footing (in)	8'	10'	12'	18' trib	Min Post Type	Uplift Footing (in)	8'	10'	12'
On Slab	On Slab	n/a	A1					n/a	A1					n/a	A1					n/a	A1					n/a	A1				
0.042"x3"x8"	L1	5'-10"	A1	20	23	25	26	5'-7"	A1	20	24	25	26	5'-4"	A1	20	24	26	27	5'-1"	A1	21	25	26	27	4'-10"	A1	21	25	26	28
Double 3"x8"	L1/L12	9'-3"	A1	23	23	25	26	8'-11"	A1	24	24	25	26	8'-6"	A1	24	24	26	27	8'-2"	A1	24	25	26	27	7'-11"	A1	24	25	26	28
Double 2"x6.625"	L2/L12	8'-5"	A1	23	23	25	26	8'-1"	A1	23	24	25	26	7'-9"	A1	23	24	26	27	7'-6"	A1	23	25	26	27	7'-3"	A1	23	25	26	28
16 G Steel C	L18	9'-2"	A1	23	23	25	26	8'-7"	A1	23	24	25	26	8'-0"	A1	23	24	26	27	7'-7"	A1	23	25	26	27	7'-2"	A1	23	25	26	28
14 G Steel C	L18	11'-5"	A1	25	24	26	27	10'-11"	A1	25	25	26	27	10'-5"	A1	25	25	26	27	10'-0"	A1	26	25	26	27	9'-7"	A1	26	25	26	28
12 G Steel C	L18	17'-8"	A3	29	27	29	30	17'-0"	A3	29	27	29	30	16'-3"	A3	30	28	29	31	15'-8"	A3	30	28	29	31	15'-0"	B	30	28	30	31
Double 16 G Steel C	L18/L8	19'-0"	A3	30	28	29	31	18'-5"	A3	30	28	30	31	17'-9"	C	30	28	30	31	17'-2"	C	31	28	30	32	16'-7"	C	31	29	30	32
Double 14 G Steel C	L18/L8	22'-2"	C	31	29	31	32	21'-6"	C	32	29	31	32	20'-8"	D	32	29	31	33	20'-1"	D	32	30	31	33	19'-6"	D	33	30	32	33
Double 12 G Steel C	L18/L8	29'-6"	E	34	31	33	34	28'-7"	E	35	31	33	35	27'-7"	E	35	32	33	35	26'-10"	E	36	32	34	35	26'-0"	E	36	32	34	36

Registered Professional Engineer (Civil)
CERTIFICATE NO. 39702
CARL PUTNAM
Date Signed
ARIZONA U.S.A.
Expires 09/30/2024

SECTION 2.0 POST SPACING, POST TYPE AND FOOTING SIZE FOR LATTICE COVERS

Roof Solidity: 60%

Ground Snow Load: 10 psf **Live Load: 10 psf** **Wind Speed: 130 MPH EXPOSURE C or 150 MPH EXPOSURE B** **Seismic Ss= 150%** **Seismic Design Category D** **Structures are Attached to Existing Building**

Table 2.5a — cubic footing "d" Constrained Footing (in) Max Post Length

Header	Detail	3' trib	Min Post Type	Uplift Footing (in)	8'	10'	12'	3.5' trib	Min Post Type	Uplift Footing (in)	8'	10'	12'	4' trib	Min Post Type	Uplift Footing (in)	8'	10'	12'	4.5' trib	Min Post Type	Uplift Footing (in)	8'	10'	12'
On Slab	On Slab	22'-8"	A1					19'-5"	A1					17'-0"	A1					15'-1"	A1				
0.042"x3"x8"	L1	12'-0"	A1	22	20	21	22	11'-0"	A1	23	21	22	23	10'-2"	A1	23	22	23	24	9'-6"	A1	24	22	24	25
Double 3"x8"	L1/L12	17'-8"	A1	25	20	21	22	16'-3"	A1	26	21	22	23	15'-2"	A1	27	22	23	24	14'-3"	A1	27	22	24	25
Double 2"x6.625"	L2/L12	15'-8"	A1	24	20	21	22	14'-6"	A1	25	21	22	23	13'-6"	A1	26	22	23	24	12'-8"	A1	26	22	24	25
16 G Steel C	L18	20'-7"	A1	27	20	21	22	18'-8"	A1	27	21	22	23	17'-1"	A1	28	22	23	24	15'-10"	A1	28	22	24	25
14 G Steel C	L18	24'-8"	A1	28	20	21	22	22'-5"	A1	29	21	22	23	20'-7"	A2	29	22	23	24	19'-2"	A2	30	22	24	25
12 G Steel C	L18	35'-7"	A3	32	22	23	24	32'-7"	C	33	22	24	25	30'-2"	C	33	23	24	25	28'-2"	C	34	23	24	25
Double 16 G Steel C	L18/L8	34'-7"	A3	32	22	23	24	32'-0"	B	33	22	24	25	30'-0"	C	33	23	24	25	28'-3"	C	34	23	24	25
Double 14 G Steel C	L18/L8	39'-8"	C	33	23	24	25	36'-10"	C	34	23	24	26	34'-6"	D	35	23	25	26	32'-6"	D	36	24	25	26
Double 12 G Steel C	L18/L8	40'-0"	C	33	23	24	25	40'-0"	D	35	24	25	26	40'-0"	E	37	24	26	27	40'-0"	E	38	25	27	28

Header	Detail	5' trib	Min Post Type	Uplift Footing (in)	8'	10'	12'	5.5' trib	Min Post Type	Uplift Footing (in)	8'	10'	12'	6' trib	Min Post Type	Uplift Footing (in)	8'	10'	12'	6.5' trib	Min Post Type	Uplift Footing (in)	8'	10'	12'
On Slab	On Slab	13'-7"	A1					12'-4"	A1					11'-4"	A1					10'-5"	A1				
0.042"x3"x8"	L1	8'-11"	A1	24	23	24	26	8'-5"	A1	24	24	25	26	8'-0"	A1	25	24	26	27	7'-7"	A1	25	25	26	27
Double 3"x8"	L1/L12	13'-5"	A1	27	23	24	26	12'-9"	A1	28	24	25	26	12'-2"	A1	28	24	26	27	11'-7"	A1	29	25	26	27
Double 2"x6.625"	L2/L12	12'-0"	A1	26	23	24	26	11'-5"	A1	27	24	25	26	10'-11"	A1	27	24	26	27	10'-5"	A1	28	25	26	27
16 G Steel C	L18	14'-9"	A1	28	23	24	26	13'-10"	A1	29	24	25	26	13'-0"	A1	29	24	26	27	12'-4"	A2	29	25	26	27
14 G Steel C	L18	17'-10"	A2	30	23	24	26	16'-10"	A2	31	24	25	26	15'-10"	A3	31	24	26	27	15'-0"	A3	31	25	26	27
12 G Steel C	L18	26'-6"	D	34	23	25	26	25'-0"	D	35	24	25	26	23'-9"	D	35	24	26	27	22'-7"	D	36	25	26	27
Double 16 G Steel C	L18/L8	26'-9"	D	35	23	25	26	25'-6"	D	35	24	25	26	24'-5"	D	36	24	26	27	23'-5"	E	36	25	26	27
Double 14 G Steel C	L18/L8	30'-10"	E	36	24	26	27	29'-5"	E	37	24	26	27	28'-2"	E	37	25	26	27	27'-1"	E	38	25	26	28
Double 12 G Steel C	L18/L8	40'-0"	F	39	26	27	29	38'-11"	F	40	26	28	29	37'-3"	G	41	27	28	29	35'-10"	G	42	27	28	30

Header	Detail	7' trib	Min Post Type	Uplift Footing (in)	8'	10'	12'	7.5' trib	Min Post Type	Uplift Footing (in)	8'	10'	12'	8' trib	Min Post Type	Uplift Footing (in)	8'	10'	12'
On Slab	On Slab	9'-8"	A1					9'-1"	A1					8'-6"	A1				
0.042"x3"x8"	L1	7'-3"	A1	25	25	27	28	6'-11"	A1	25	26	27	28	6'-8"	A1	25	26	28	29
Double 3"x8"	L1/L12	11'-2"	A1	29	25	27	28	10'-8"	A2	29	26	27	28	10'-4"	A2	29	26	28	29
Double 2"x6.625"	L2/L12	10'-0"	A1	28	25	27	28	9'-8"	A1	28	26	27	28	9'-4"	A1	28	26	28	29
16 G Steel C	L18	11'-8"	A2	29	25	27	28	11'-1"	A2	30	26	27	28	10'-7"	A2	30	26	28	29
14 G Steel C	L18	14'-3"	A3	31	25	27	28	13'-8"	A3	32	26	27	28	13'-0"	A3	32	26	28	29
12 G Steel C	L18	21'-7"	E	36	25	27	28	20'-8"	E	36	26	27	28	19'-11"	E	37	26	28	29
Double 16 G Steel C	L18/L8	22'-6"	E	36	25	27	28	21'-9"	E	37	26	27	28	21'-0"	E	37	26	28	29
Double 14 G Steel C	L18/L8	26'-1"	E	38	25	27	28	25'-2"	E	39	26	27	28	24'-4"	E	39	26	28	29
Double 12 G Steel C	L18/L8	34'-6"	G	42	27	29	30	33'-4"	G	43	27	29	30	32'-4"	G	43	28	29	31

Table 2.5a — cubic footing "d" Constrained Footing (in) Max Post Length

Header	Detail	8.5' trib	Min Post Type	Uplift Footing (in)	8'	10'	12'	9' trib	Min Post Type	Uplift Footing (in)	8'	10'	12'	10' trib	Min Post Type	Uplift Footing (in)	8'	10'	12'	10.5' trib	Min Post Type	Uplift Footing (in)	8'	10'	12'
On Slab	On Slab	8'-0"	A1					7'-6"	A1					6'-9"	A1					6'-5"	A1				
0.042"x3"x8"	L1	6'-4"	A1	26	26	28	29	6'-1"	A1	26	27	28	30	5'-8"	A1	26	28	29	31	5'-6"	A1	26	28	30	31
Double 3"x8"	L1/L12	9'-11"	A2	30	26	28	29	9'-7"	A2	30	27	28	30	9'-0"	A2	30	28	29	31	8'-9"	A2	30	28	30	31
Double 2"x6.625"	L2/L12	9'-0"	A1	29	26	28	29	8'-8"	A1	29	27	28	30	8'-2"	A2	29	28	29	31	8'-0"	A2	30	28	30	31
16 G Steel C	L18	10'-2"	A2	30	26	28	29	9'-9"	A2	30	28	29	31	8'-10"	A2	30	28	29	31	8'-5"	A2	30	28	30	31
14 G Steel C	L18	13'-4"	B	33	28	29	31	11'-2"	B	33	28	29	31	10'-9"	B	33	28	30	31	10'-5"	C	33	28	30	31
12 G Steel C	L18	19'-2"	E	37	26	28	29	18'-5"	E	37	27	28	30	17'-3"	E	38	28	29	31	16'-9"	E	38	28	30	31
Double 16 G Steel C	L18/L8	20'-4"	E	38	26	28	29	19'-9"	E	38	27	28	30	18'-8"	E	39	28	29	31	18'-2"	E	39	28	30	31
Double 14 G Steel C	L18/L8	23'-7"	F	40	26	28	29	22'-11"	F	40	27	28	30	21'-9"	F	41	28	29	31	21'-2"	G	41	28	30	31
Double 12 G Steel C	L18/L8	31'-4"	G	43	28	29	31	30'-6"	G	44	28	30	31	28'-11"	H1	45	28	30	31	28'-3"	H1	45	29	30	32

Header	Detail	11' trib	Min Post Type	Uplift Footing (in)	8'	10'	12'	11.5' trib	Min Post Type	Uplift Footing (in)	8'	10'	12'	12' trib	Min Post Type	Uplift Footing (in)	8'	10'	12'	13' trib	Min Post Type	Uplift Footing (in)	8'	10'	12'
On Slab	On Slab	6'-2"	A1					5'-11"	A1					5'-8"	A1					5'-2"	A1				
0.042"x3"x8"	L1	5'-4"	A1	26	28	30	31	5'-2"	A1	26	29	30	32	5'-0"	A1	26	29	31	32	4'-8"	A1	27	29	31	33
Double 3"x8"	L1/L12	8'-6"	A2	31	28	30	31	8'-3"	A3	31	29	30	32	8'-1"	A3	31	29	31	32	7'-8"	A3	31	29	31	33
Double 2"x6.625"	L2/L12	7'-9"	A2	30	28	30	31	7'-7"	A2	30	29	30	32	7'-4"	A2	30	29	31	32	7'-0"	A2	30	29	31	33
16 G Steel C	L18	8'-0"	A2	30	28	30	31	7'-8"	A2	30	29	30	32	7'-4"	A2	30	29	31	32	6'-10"	A2	30	29	31	33
14 G Steel C	L18	10'-5"	C	33	28	30	31	10'-1"	C	33	29	30	32	9'-9"	C	33	29	31	32	9'-2"	C	33	29	31	33
12 G Steel C	L18	16'-3"	E	38	28	30	31	15'-9"	E	38	28	30	32	15'-4"	E	38	29	31	32	14'-7"	E	39	29	31	33
Double 16 G Steel C	L18/L8	17'-9"	E	39	28	30	31	17'-4"	E	39	29	30	32	16'-11"	F	40	29	31	32	16'-2"	F	40	29	31	33
Double 14 G Steel C	L18/L8	20'-8"	G	41	28	30	31	20'-3"	G	42	29	30	32	19'-9"	G	42	29	31	32	19'-0"	G	42	29	31	33
Double 12 G Steel C	L18/L8	27'-7"	H1	45	29	30	32	27'-0"	H1	46	29	31	32	26'-5"	H1	46	29	31	32	25'-5"	H1	47	29	31	33

Header	Detail	14' trib	Min Post Type	Uplift Footing (in)	8'	10'	12'	15' trib	Min Post Type	Uplift Footing (in)	8'	10'	12'
On Slab	On Slab	4'-10"	A1					4'-6"	A1				
0.042"x3"x8"	L1	4'-5"	A1	27	30	32	33	4'-2"	A1	27	31	32	34
Double 3"x8"	L1/L12	6'-9"	A3	32	30	32	33	7'-0"	A3	32	31	32	34
Double 2"x6.625"	L2/L12	6'-5"	A3	31	30	32	33	6'-5"	A3	31	31	32	34
16 G Steel C	L18	6'-4"	A2	30	30	32	33	5'-11"	A2	30	31	32	34
14 G Steel C	L18	8'-7"	C	33	29	31	33	8'-0"	C	33	31	32	34
12 G Steel C	L18	13'-10"	E	39	30	32	33	13'-3"	E	39	31	32	34
Double 16 G Steel C	L18/L8	15'-6"	F	41	30	32	33	14'-11"	G	41	31	32	34
Double 14 G Steel C	L18/L8	18'-3"	G	43	30	32	33	17'-7"	G	43	31	32	34
Double 12 G Steel C	L18/L8	24'-6"	H1	47	30	32	33	23'-8"	H1	48	31	32	34

Amerimax Exterior Home Products
28921 US Hwy 74
Romoland, CA 92585

Carl Putnam, P. E.
3441 Ivylink Place
Lynchburg, VA 24503
carlputnam@comcast.net

Ground Snow Load: 10 psf **Live Load: 10 psf** **Wind Speed: 130 MPH EXPOSURE C or 150 MPH EXPOSURE B** **Seismic Ss= 150%** **Seismic Design Category D** **Freestanding Structures**

Table 2.5b — cubic footing "d" Constrained Footing (in) Max Post Length

Header	Detail	3' trib	Min Post Type	Uplift Footing (in)	8'	10'	12'	3.5' trib	Min Post Type	Uplift Footing (in)	8'	10'	12'	4' trib	Min Post Type	Uplift Footing (in)	8'	10'	12'	4.5' trib	Min Post Type	Uplift Footing (in)	8'	10'	12'
On Slab	On Slab	n/a	A1					n/a	A1					n/a	A1					n/a	A1				
0.042"x3"x8"	L1	14'-0"	A1	21	31	32	34	12'-11"	A1	21	30	32	33	12'-0"	A1	22	29	31	33	11'-0"	A1	22	29	30	32
Double 3"x8"	L1/L12	20'-5"	A1	23	34	36	37	18'-11"	A1	24	33	35	37	17'-8"	A2	25	32	34	36	16'-3"	A2	25	32	34	35
Double 2"x6.625"	L2/L12	18'-1"	A1	22	31	33	34	16'-9"	A1	23	30	32	34	15'-8"	A1	24	30	32	33	14'-6"	A1	24	29	31	33
16 G Steel C	L18	24'-7"	A2	25	35	37	39	22'-4"	A2	25	34	36	38	20'-7"	A2	26	34	36	37	18'-8"	A3	26	33	35	36
14 G Steel C	L18	29'-3"	A3	26	37	39	41	26'-8"	A3	27	36	38	40	24'-8"	A3	27	35	37	39	22'-5"	B	28	34	36	38
12 G Steel C	L18	40'-0"	D	29	40	42	44	38'-4"	E	30	39	42	44	35'-7"	E	31	39	41	43	32'-7"	E	31	38	40	42
Double 16 G Steel C	L18/L8	39'-10"	D	29	40	42	44	36'-11"	D	30	39	41	43	34'-7"	E	31	38	41	43	32'-0"	E	31	38	40	42
Double 14 G Steel C	L18/L8	40'-0"	D	29	40	42	44	40'-0"	E	31	40	42	44	39'-8"	E	32	40	42	44	36'-10"	E	33	39	41	43
Double 12 G Steel C	L18/L8	40'-0"	D	29	40	42	44	40'-0"	E	31	40	42	44	40'-0"	E	32	40	42	44	40'-0"	F	33	40	42	44

Header	Detail	5' trib	Min Post Type	Uplift Footing (in)	8'	10'	12'	5.5' trib	Min Post Type	Uplift Footing (in)	8'	10'	12'	6' trib	Min Post Type	Uplift Footing (in)	8'	10'	12'	6.5' trib	Min Post Type	Uplift Footing (in)	8'	10'	12'
On Slab	On Slab	n/a	A1					n/a	A1					n/a	A1					n/a	A1				
0.042"x3"x8"	L1	10'-5"	A1	22	28	30	31	9'-10"	A1	22	28	30	31	9'-4"	A1	23	28	29	31	8'-11"	A1	23	27	29	30
Double 3"x8"	L1/L12	9'-11"	C	28	28	30	31	9'-4"	C	29	28	29	31	9'-5"	C	29	28	29	31	8'-11"	D	29	28	30	32
Double 2"x6.625"	L2/L12	9'-0"	A3	27	27	29	30	8'-9"	B	28	28	29	31	8'-7"	C	28	28	29	31	8'-2"	C	28	28	30	32
16 G Steel C	L18	10'-2"	C	29	28	30	31	9'-10"	C	29	28	30	31	9'-7"	C	29	28	29	31	8'-9"	C	29	28	30	32
14 G Steel C	L18	12'-2"	E	31	29	31	33	12'-2"	E	31	29	31	33	11'-9"	E	31	29	31	32	11'-1"	E	31	29	30	32
12 G Steel C	L18	19'-2"	G	35	33	35	37	18'-7"	G	36	33	35	36	18'-2"	G	36	33	35	36	17'-1"	G	36	32	34	36
Double 16 G Steel C	L18/L8	20'-4"	G	36	34	36	37	19'-10"	G	36	33	35	37	19'-5"	G	37	33	35	37	18'-6"	G	37	33	35	36
Double 14 G Steel C	L18/L8	24'-2"	H1	38	35	37	39	23'-1"	H1	38	35	37	38	22'-7"	H1	38	35	37	38	21'-7"	H1	39	34	36	38
Double 12 G Steel C	L18/L8	32'-1"	H1	41	38	40	42	31'-4"	H2	42	37	40	42	30'-8"	H2	42	37	39	41	30'-1"	H2	42	37	39	41

Header	Detail	7' trib	Min Post Type	Uplift Footing (in)	8'	10'	12'	7.5' trib	Min Post Type	Uplift Footing (in)	8'	10'	12'	8' trib	Min Post Type	Uplift Footing (in)	8'	10'	12'
On Slab	On Slab	n/a	A1					n/a	A1					n/a	A1				
0.042"x3"x8"	L1	8'-7"	A1	23	27	29	30	8'-2"	A1	23	27	28	30	7'-11"	A1	24	26	28	29
Double 3"x8"	L1/L12	8'-7"	D	29	29	31	32	8'-2"	D	30	29	31	33	7'-6"	D	30	29	31	33
Double 2"x6.625"	L2/L12	7'-10"	C	28	29	31	32	7'-6"	C	29	29	31	33	7'-2"	C	28	30	32	33
16 G Steel C	L18	8'-2"	C	29	28	30	32	7'-7"	C	29	29	31	33	7'-3"	C	28	30	32	33
14 G Steel C	L18	10'-6"	E	31	29	31	32	10'-0"	E	32	29	31	33	9'-11"	E	32	29	31	33
12 G Steel C	L18	16'-4"	G	36	32	34	35	15'-8"	G	37	31	33	35	15'-3"	G	37	31	33	35
Double 16 G Steel C	L18/L8	17'-10"	H1	37	32	34	36	17'-2"	H1	38	32	34	36	16'-5"	H1	38	32	34	36
Double 14 G Steel C	L18/L8	20'-10"	H1	39	34	36	37	20'-1"	H1	40	33	35	37	19'-3"	H1	40	33	35	37
Double 12 G Steel C	L18/L8	27'-9"	H2	43	36	38	40	26'-10"	H2	44	36	38	40	25'-9"	H2	44	36	38	40

Ground Snow Load: 10 psf **Live Load: 10 psf** **Wind Speed: 120 MPH EXPOSURE C or 140 MPH EXPOSURE B** **Seismic Ss= 150%** **Seismic Design Category D** **Structures are Attached to Existing Building**

Table 2.5c — cubic footing "d" Constrained Footing (in) Max Post Length

Header	Detail	3' trib	Min Post Type	Uplift Footing (in)	8'	10'	12'	3.5' trib	Min Post Type	Uplift Footing (in)	8'	10'	12'	4' trib	Min Post Type	Uplift Footing (in)	8'	10'	12'	4.5' trib	Min Post Type	Uplift Footing (in)	8'	10'	12'
On Slab	On Slab	22'-8"	A1					19'-5"	A1					17'-0"	A1					15'-1"	A1				
0.042"x3"x8"	L1	13'-3"	A1	22	19	21	22	12'-4"	A1	22	20	21	22	11'-3"	A1	23	21	22	23	10'-7"	A1	23	22	23	24
Double 3"x8"	L1/L12	19'-4"	A1	25	19	21	22	18'-0"	A1	25	20	21	22	16'-7"	A1	26	21	22	23	15'-8"	A1	26	22	23	24
Double 2"x6.625"	L2/L12	17'-2"	A1	24	19	21	22	16'-0"	A1	24	20	21	22	14'-9"	A1	25	21	22	23	14'-0"	A1	25	22	23	24
16 G Steel C	L18	23'-0"	A1	26	20	21	22	21'-2"	A1	27	20	21	22	19'-1"	A1	27	21	22	23	17'-10"	A2	28	22	23	24
14 G Steel C	L18	27'-6"	A2	28	21	22	23	25'-3"	A2	28	21	22	23	22'-11"	A2	29	21	22	23	21'-6"	A3	29	22	23	24
12 G Steel C	L18	39'-4"	C	31	23	24	25	36'-5"	C	32	23	24	26	33'-3"	D	33	23	25	26	31'-4"	D	33	24	25	26
Double 16 G Steel C	L18/L8	37'-10"	B	31	22	24	25	35'-4"	C	32	23	24	25	32'-8"	D	32	23	25	26	30'-11"	D	33	24	25	26
Double 14 G Steel C	L18/L8	40'-0"	C	31	23	24	25	40'-0"	D	33	24	25	26	37'-6"	D	34	24	25	27	35'-7"	E	35	24	26	27
Double 12 G Steel C	L18/L8	40'-0"	C	31	23	24	25	40'-0"	D	33	24	25	26	40'-0"	E	35	24	26	27	40'-0"	E	36	25	27	28

Header	Detail	5' trib	Min Post Type	Uplift Footing (in)	8'	10'	12'	5.5' trib	Min Post Type	Uplift Footing (in)	8'	10'	12'	6' trib	Min Post Type	Uplift Footing (in)	8'	10'	12'	6.5' trib	Min Post Type	Uplift Footing (in)	8'	10'	12'
On Slab	On Slab	13'-7"	A1					12'-4"	A1					11'-4"	A1					10'-5"	A1				
0.042"x3"x8"	L1	10'-0"	A1	24	22	23	25	9'-4"	A1	24	23	24	25	8'-11"	A1	24	23	25	26	8'-5"	A1	24	24	25	26
Double 3"x8"	L1/L12	14'-11"	A1	27	22	23	25	14'-0"	A1	27	23	24	25	13'-5"	A2	28	23	25	26	12'-9"	A2	28	24	25	26
Double 2"x6.625"	L2/L12	13'-4"	A1	26	22	23	25	12'-6"	A1	26	23	24	25	12'-0"	A1	27	23	25	26	11'-5"	A1	27	24	25	26
16 G Steel C	L18	16'-9"	A2	28	22	23	25	15'-6"	A2	28	23	24	25	14'-9"	A2	28	23	25	26	13'-10"	A2	29	24	25	26
14 G Steel C	L18	20'-3"	A3	30	22	23	25	18'-10"	A3	30	23	24	25	17'-10"	A3	30	23	25	26	16'-10"	A3	31	24	25	26
12 G Steel C	L18	29'-8"	D	34	24	25	27	27'-9"	E	34	24	25	27	26'-6"	E	35	24	26	27	25'-0"	E	35	24	26	27
Double 16 G Steel C	L18/L8	29'-6"	D	34	24	25	26	27'-10"	E	34	24	26	27	26'-9"	E	35	24	26	27	25'-6"	E	35	25	26	27
Double 14 G Steel C	L18/L8	33'-11"	E	35	25	26	27	32'-1"	E	36	25	26	28	30'-10"	E	36	25	27	28	29'-5"	E	37	26	27	28
Double 12 G Steel C	L18/L8	40'-0"	E	37	26	27	29	40'-0"	F	39	26	28	29	40'-0"	G	40	27	29	30	38'-11"	G	40	27	29	30

Header	Detail	7' trib	Min Post Type	Uplift Footing (in)	8'	10'	12'	7.5' trib	Min Post Type	Uplift Footing (in)	8'	10'	12'	8' trib	Min Post Type	Uplift Footing (in)	8'	10'	12'
On Slab	On Slab	9'-8"	A1					9'-1"	A1					8'-6"	A1				
0.042"x3"x8"	L1	8'-1"	A1	25	25	26	27	7'-9"	A1	25	25	26	28	7'-5"	A1	25	25	26	28
Double 3"x8"	L1/L12	12'-4"	A2	28	24	26	27	11'-10"	A2	29	25	26	27	11'-4"	A2	29	25	26	28
Double 2"x6.625"	L2/L12	11'-0"	A1	27	24	26	27	10'-8"	A2	28	25	26	27	10'-3"	A2	28	25	26	28
16 G Steel C	L18	13'-2"	A2	29	24	26	27	12'-8"	A3	29	25	26	27	12'-0"	A3	29	25	26	28
14 G Steel C	L18	16'-1"	A3	31	24	26	27	15'-5"	C	31	25	26	27	14'-8"	C	31	25	26	28
12 G Steel C	L18	24'-0"	E	35	25	26	27	23'-2"	E	36	25	26	28	22'-11"	E	36	25	26	28
Double 16 G Steel C	L18/L8	24'-8"	E	36	25	26	28	23'-11"	E	36	25	27	28	22'-11"	E	36	25	27	28
Double 14 G Steel C	L18/L8	28'-6"	E	37	26	27	29	27'-7"	F	38	26	28	29	26'-7"	F	38	26	28	29
Double 12 G Steel C	L18/L8	37'-8"	G	41	28	29	31	36'-6"	G	41	28	30	31	35'-2"	H1	42	28	30	31

Registered Professional Engineer (Civil) CERTIFICATE NO. 39702 CARL PUTNAM Date Signed ARIZONA, U.S.A. Expires 09/30/2024

SECTION 2.0 POST SPACING, POST TYPE AND FOOTING SIZE FOR LATTICE COVERS

Roof Solidity: 60%

Ground Snow Load: 10 psf — Live Load: 10 psf — Wind Speed: 150 MPH EXPOSURE C or 170 MPH EXPOSURE B — Seismic Ss= 25% — Seismic Design Category B — Structures are Attached to Existing Building

Table 2.6a (cubic footing "d")

Header	Detail	trib 3'	Min Post Type	Uplift Footing (in)	Constrained Footing (in) Max Post Length 8'	10'	12'	trib 3.5'	Min Post Type	Uplift Footing (in)	8'	10'	12'	trib 4'	Min Post Type	Uplift Footing (in)	8'	10'	12'	trib 4.5'	Min Post Type	Uplift Footing (in)	8'	10'	12'	trib 5'	Min Post Type	Uplift Footing (in)	8'	10'	12'
On Slab	On Slab	22'-8"	A2					19'-5"	A2					17'-0"	A2					15'-1"	A2					13'-7"	A2				
0.042"x3"x8"	L1	10'-2"	A1	23	22	23	24	9'-4"	A1	24	23	24	25	8'-7"	A1	24	23	25	26	8'-0"	A1	25	24	26	27	7'-6"	A1	25	25	26	28
Double 3"x8"	L1/L12	15'-2"	A1	27	22	23	24	14'-0"	A1	27	23	24	25	12'-11"	A1	28	23	25	26	12'-2"	A1	28	24	26	27	11'-6"	A1	29	25	26	28
Double 2"x6.625"	L2/L12	13'-6"	A1	26	22	23	24	12'-6"	A1	26	23	24	25	11'-7"	A1	27	23	25	26	10'-11"	A1	27	24	26	27	10'-4"	A1	28	25	26	28
16 G Steel C	L18	17'-1"	A1	28	22	23	24	15'-6"	A1	28	23	24	25	14'-0"	A1	29	23	25	26	13'-0"	A1	29	24	26	27	12'-2"	A2	29	25	26	28
14 G Steel C	L18	20'-7"	A2	29	22	23	24	18'-10"	A2	30	23	24	25	17'-1"	A2	30	23	25	26	15'-10"	A2	31	24	26	27	14'-10"	A3	31	25	26	28
12 G Steel C	L18	30'-2"	C	33	22	23	24	27'-9"	C	34	23	24	25	25'-4"	D	35	23	25	26	23'-9"	D	35	24	26	27	22'-4"	D	36	25	26	28
Double 16 G Steel C	L18/L8	30'-0"	C	33	22	23	24	27'-10"	C	34	23	24	25	25'-10"	D	35	23	25	26	24'-5"	D	36	24	26	27	23'-2"	E	36	25	26	28
Double 14 G Steel C	L18/L8	34'-6"	D	35	22	23	24	32'-1"	D	36	23	24	25	29'-9"	E	37	23	25	26	28'-2"	E	37	24	26	27	26'-10"	E	38	25	26	28
Double 12 G Steel C	L18/L8	40'-0"	E	37	22	23	24	40'-0"	E	39	23	24	25	39'-4"	F	40	23	25	26	37'-3"	F	41	24	26	27	35'-6"	G	42	25	26	28

Header	Detail	trib 5.5'	Min Post Type	Uplift Footing (in)	Constrained Footing (in) Max Post Length 8'	10'	12'	trib 6'	Min Post Type	Uplift Footing (in)	8'	10'	12'	trib 6.5'	Min Post Type	Uplift Footing (in)	8'	10'	12'	trib 7'	Min Post Type	Uplift Footing (in)	8'	10'	12'	trib 7.5'	Min Post Type	Uplift Footing (in)	8'	10'	12'	trib 8'	Min Post Type	Uplift Footing (in)	8'	10'	12'
On Slab	On Slab	12'-4"	A2					11'-4"	A2					10'-5"	A1					9'-8"	A2					9'-1"	A2					8'-6"	A2				
0.042"x3"x8"	L1	7'-0"	A1	25	25	27	28	6'-8"	A1	25	26	28	29	6'-4"	A1	26	27	28	29	5'-11"	A1	26	27	29	30	5'-8"	A1	26	28	29	31	5'-5"	A1	26	28	30	31
Double 3"x8"	L1/L12	10'-10"	A1	29	25	27	28	10'-4"	A2	29	26	28	29	9'-10"	A2	30	27	28	29	9'-4"	A2	30	27	29	30	9'-0"	A2	30	28	29	31	8'-7"	A2	31	28	30	31
Double 2"x6.625"	L2/L12	9'-9"	A1	28	25	27	28	9'-4"	A1	29	26	28	29	8'-11"	A1	29	27	28	29	8'-6"	A1	29	27	29	30	8'-2"	A2	29	28	29	31	7'-10"	A2	30	28	30	31
16 G Steel C	L18	11'-3"	A2	29	25	27	28	10'-7"	A2	30	26	28	29	10'-1"	A2	30	27	28	29	9'-5"	A2	30	27	29	30	8'-10"	A2	30	28	29	31	8'-3"	A2	30	28	30	31
14 G Steel C	L18	13'-9"	A3	32	25	27	28	13'-0"	A3	32	26	28	29	12'-5"	A3	32	27	28	29	11'-8"	A3	32	27	29	30	11'-2"	A3	33	28	29	31	10'-7"	A3	33	28	30	31
12 G Steel C	L18	20'-11"	E	36	25	27	28	19'-11"	E	37	26	28	29	19'-0"	E	37	27	28	29	18'-0"	E	37	27	29	30	17'-3"	E	38	28	29	31	16'-6"	E	38	28	30	31
Double 16 G Steel C	L18/L8	21'-11"	E	37	25	27	28	21'-0"	E	37	26	28	29	20'-2"	E	38	27	28	29	19'-4"	E	38	27	29	30	18'-8"	E	39	28	29	31	17'-11"	E	39	28	30	31
Double 14 G Steel C	L18/L8	25'-5"	E	39	25	27	28	24'-4"	E	39	26	28	29	23'-5"	E	40	27	28	29	22'-6"	F	40	27	29	30	21'-9"	F	41	28	29	31	20'-11"	F	41	28	30	31
Double 12 G Steel C	L18/L8	33'-8"	G	42	25	27	28	32'-4"	G	43	26	28	29	31'-2"	G	44	27	28	29	29'-11"	G	44	27	29	30	28'-11"	H1	45	28	29	31	27'-11"	H1	45	28	30	31

Header	Detail	trib 8.5'	Min Post Type	Uplift Footing (in)	Footing (in) Max Post Length 8'	10'	12'	trib 9'	Min Post Type	Uplift Footing (in)	8'	10'	12'	trib 9.5'	Min Post Type	Uplift Footing (in)	8'	10'	12'	trib 10'	Min Post Type	Uplift Footing (in)	8'	10'	12'	trib 10.5'	Min Post Type	Uplift Footing (in)	8'	10'	12'
On Slab	On Slab	8'-0"	A2					7'-6"	A2					7'-2"	A2					6'-9"	A2					6'-5"	A2				
0.042"x3"x8"	L1	5'-2"	A1	26	28	30	32	5'-0"	A1	27	29	31	32	4'-9"	A1	27	29	31	32	4'-7"	A1	27	30	31	33	4'-5"	A1	27	30	32	33
Double 3"x8"	L1/L12	8'-4"	A2	31	28	30	32	8'-1"	A3	31	29	31	32	7'-9"	A3	31	29	31	32	7'-6"	A3	31	30	31	33	7'-3"	A3	32	30	32	33
Double 2"x6.625"	L2/L12	7'-7"	A2	30	28	30	32	7'-4"	A2	30	29	31	32	7'-1"	A2	30	29	31	32	6'-11"	A2	31	30	31	33	6'-9"	A2	31	30	32	33
16 G Steel C	L18	7'-9"	A2	30	28	30	32	7'-4"	A2	30	29	31	32	6'-11"	A2	30	29	31	32	6'-7"	A2	30	30	31	33	6'-4"	A2	30	30	32	33
14 G Steel C	L18	10'-2"	B	33	28	30	32	9'-9"	C	33	29	31	32	9'-4"	C	33	29	31	32	8'-11"	C	33	30	31	33	8'-7"	C	33	30	32	33
12 G Steel C	L18	15'-11"	E	38	28	30	32	15'-4"	E	39	29	31	32	14'-9"	E	39	29	31	32	14'-3"	E	39	30	31	33	13'-10"	E	39	30	32	33
Double 16 G Steel C	L18/L8	17'-5"	E	39	28	30	32	16'-11"	E	40	29	31	32	16'-4"	F	40	29	31	32	15'-11"	F	40	30	31	33	15'-6"	F	41	30	32	33
Double 14 G Steel C	L18/L8	20'-4"	G	42	28	30	32	19'-9"	G	42	29	31	32	19'-2"	G	42	29	31	32	18'-8"	G	43	30	31	33	18'-3"	G	43	30	32	33
Double 12 G Steel C	L18/L8	27'-2"	H1	46	28	30	32	26'-5"	H1	46	29	31	32	25'-8"	H1	47	29	31	32	25'-0"	H1	47	30	31	33	24'-6"	H1	47	30	32	33

Header	Detail	trib 11'	Min Post Type	Uplift Footing (in)	Footing (in) Max Post Length 8'	10'	12'	trib 11.5'	Min Post Type	Uplift Footing (in)	8'	10'	12'	trib 12'	Min Post Type	Uplift Footing (in)	8'	10'	12'	trib 12.5'	Min Post Type	Uplift Footing (in)	8'	10'	12'	trib 13'	Min Post Type	Uplift Footing (in)	8'	10'	12'
On Slab	On Slab	6'-2"	A2					5'-11"	A2					5'-8"	A2					5'-5"	A2					5'-2"	A2				
0.042"x3"x8"	L1	4'-3"	A1	27	30	32	34	4'-1"	A1	27	31	33	34	3'-11"	A1	27	31	33	34	3'-10"	A1	27	31	33	35	3'-9"	A1	27	32	34	35
Double 3"x8"	L1/L12	7'-0"	A3	32	30	32	34	6'-10"	A3	32	31	33	34	6'-8"	A3	32	31	33	34	6'-6"	A3	32	31	33	35	6'-4"	A3	32	32	34	35
Double 2"x6.625"	L2/L12	6'-6"	A2	31	30	32	34	6'-4"	A3	31	31	33	34	6'-2"	A3	31	31	33	34	6'-0"	A3	31	31	33	35	5'-10"	A3	32	32	34	35
16 G Steel C	L18	6'-0"	A2	30	30	32	34	5'-9"	A2	30	31	33	34	5'-6"	A2	30	31	33	34	5'-3"	A2	30	31	33	35	5'-1"	A2	30	32	34	35
14 G Steel C	L18	8'-1"	C	33	30	32	34	7'-9"	C	33	31	33	34	7'-5"	C	33	31	33	34	7'-2"	C	33	31	33	35	6'-11"	C	33	32	34	35
12 G Steel C	L18	13'-4"	E	39	30	32	34	13'-0"	E	40	31	33	34	12'-7"	E	40	31	33	34	12'-3"	F	40	31	33	35	12'-0"	F	40	32	34	35
Double 16 G Steel C	L18/L8	15'-1"	F	41	30	32	34	14'-9"	G	41	31	33	34	14'-4"	G	41	31	33	34	14'-0"	G	42	31	33	35	13'-9"	G	42	32	34	35
Double 14 G Steel C	L18/L8	17'-9"	G	43	30	32	34	17'-5"	G	44	31	33	34	16'-11"	G	44	31	33	34	16'-7"	G	44	31	33	35	16'-4"	H1	44	32	34	35
Double 12 G Steel C	L18/L8	23'-10"	H1	48	30	32	34	23'-4"	H1	48	31	33	34	22'-10"	H1	48	31	33	34	22'-4"	H1	49	31	33	35	21'-11"	H1	49	32	34	35

Amerimax Exterior Home Products
28921 US Hwy 74
Romoland, CA 92585

Carl Putnam, P. E.
3441 Ivylink Place
Lynchburg, VA 24503
carlputnam@comcast.net

Ground Snow Load: 10 psf — Live Load: 10 psf — Wind Speed: 150 MPH EXPOSURE C or 170 MPH EXPOSURE B — Seismic Ss= 25% — Seismic Design Category B — Freestanding Structures

Table 2.6b (cubic footing "d")

Header	Detail	trib 3'	Min Post Type	Uplift Footing (in)	Constrained Footing (in) Max Post Length 8'	10'	12'	trib 3.5'	Min Post Type	Uplift Footing (in)	8'	10'	12'	trib 4'	Min Post Type	Uplift Footing (in)	8'	10'	12'	trib 4.5'	Min Post Type	Uplift Footing (in)	8'	10'	12'	trib 5'	Min Post Type	Uplift Footing (in)	8'	10'	12'
On Slab	On Slab	n/a	A3					n/a	A3					n/a	A3					n/a	A3					n/a	A3				
0.042"x3"x8"	L1	12'-0"	A1	22	32	33	35	11'-0"	A1	22	31	33	34	10'-2"	A1	23	30	32	34	9'-6"	A1	23	30	32	33	8'-11"	A1	23	29	31	33
Double 3"x8"	L1/L12	17'-8"	A1	25	35	37	39	16'-3"	A2	25	34	36	38	15'-2"	A2	26	34	35	37	14'-3"	A3	26	33	35	37	13'-5"	A3	27	33	34	36
Double 2"x6.625"	L2/L12	15'-8"	A1	24	32	34	36	14'-6"	A1	24	32	33	35	13'-6"	A2	25	31	33	34	12'-8"	A2	25	31	32	34	12'-0"	A2	26	30	32	33
16 G Steel C	L18	20'-7"	A2	26	36	38	40	18'-8"	A3	26	35	37	39	17'-1"	A3	27	35	37	38	15'-10"	A3	27	34	36	38	14'-9"	A3	28	33	35	37
14 G Steel C	L18	24'-8"	A3	28	38	40	42	22'-5"	C	28	37	39	41	20'-7"	C	29	36	38	40	19'-2"	C	29	36	38	39	17'-10"	D	29	35	37	39
12 G Steel C	L18	35'-7"	E	31	42	44	46	32'-7"	E	32	41	43	45	30'-2"	E	32	40	42	44	28'-2"	E	33	39	41	43	26'-6"	E	33	39	41	43
Double 16 G Steel C	L18/L8	34'-7"	E	31	41	44	46	32'-0"	E	32	41	43	45	30'-0"	E	32	40	42	44	28'-3"	E	33	39	42	43	26'-9"	E	34	39	41	43
Double 14 G Steel C	L18/L8	39'-8"	E	32	43	45	47	36'-10"	E	33	42	44	46	34'-6"	F	34	41	44	46	32'-6"	F	35	41	43	45	30'-10"	G	35	40	42	44
Double 12 G Steel C	L18/L8	40'-0"	E	32	43	45	47	40'-0"	F	34	43	45	47	40'-0"	G	36	43	45	47	40'-0"	G	37	43	45	47	40'-0"	H1	38	43	45	47

Header	Detail	trib 5.5'	Min Post Type	Uplift Footing (in)	Constrained Footing (in) Max Post Length 8'	10'	12'	trib 6'	Min Post Type	Uplift Footing (in)	8'	10'	12'	trib 6.5'	Min Post Type	Uplift Footing (in)	8'	10'	12'	trib 7'	Min Post Type	Uplift Footing (in)	8'	10'	12'	trib 7.5'	Min Post Type	Uplift Footing (in)	8'	10'	12'	trib 8'	Min Post Type	Uplift Footing (in)	8'	10'	12'
On Slab	On Slab	n/a	A3					n/a	A3					n/a	A3					n/a	A3					n/a	A3					n/a	A3				
0.042"x3"x8"	L1	8'-5"	A1	24	29	31	32	8'-0"	A1	24	29	30	32	7'-7"	A1	24	28	30	31	7'-3"	A1	24	28	29	31	6'-10"	A1	24	27	29	30	6'-7"	A1	25	27	29	30
Double 3"x8"	L1/L12	12'-9"	A3	27	32	34	36	12'-2"	A3	27	32	34	35	11'-7"	A3	28	31	33	35	11'-2"	C	28	31	33	34	10'-7"	C	28	31	32	34	10'-2"	C	28	30	32	34
Double 2"x6.625"	L2/L12	11'-5"	A2	26	30	31	33	10'-11"	A3	26	29	31	33	10'-5"	A3	27	29	31	32	10'-0"	A3	27	29	30	32	9'-7"	A3	27	28	30	32	9'-3"	A3	28	28	30	31
16 G Steel C	L18	13'-10"	A3	28	33	35	36	13'-0"	C	28	32	34	36	12'-4"	C	28	32	34	35	11'-8"	C	28	31	33	35	11'-0"	C	29	31	33	34	10'-6"	C	29	31	32	34
14 G Steel C	L18	16'-10"	D	30	34	36	38	15'-10"	D	30	34	36	38	15'-0"	D	30	33	35	37	14'-3"	D	30	33	35	37	13'-6"	D	31	33	34	36	12'-11"	E	31	32	34	36
12 G Steel C	L18	25'-0"	F	34	38	40	42	23'-9"	F	34	38	40	42	22'-7"	F	35	37	39	41	21'-7"	G	35	37	39	41	20'-6"	G	35	36	38	40	19'-8"	G	35	36	38	40
Double 16 G Steel C	L18/L8	25'-6"	F	34	38	40	42	24'-5"	F	35	38	40	42	23'-5"	G	35	37	40	41	22'-6"	G	35	37	39	41	21'-6"	G	36	37	39	41	20'-10"	G	36	36	38	40
Double 14 G Steel C	L18/L8	29'-5"	G	36	40	42	44	28'-2"	G	36	39	41	43	27'-1"	G	37	39	41	43	26'-1"	G	37	38	41	43	25'-0"	G	38	38	40	42	24'-2"	H1	38	38	40	42
Double 12 G Steel C	L18/L8	38'-11"	H1	39	43	45	47	37'-3"	H1	40	42	45	47	35'-10"	H1	40	42	44	46	34'-6"	H1	41	41	44	46	33'-1"	H1	41	41	43	45	32'-1"	H1	42	41	43	45

Header	Detail	trib 8.5'	Min Post Type	Uplift Footing (in)	Constrained Footing (in) Max Post Length 8'	10'	12'	trib 9'	Min Post Type	Uplift Footing (in)	8'	10'	12'	trib 9.5'	Min Post Type	Uplift Footing (in)	8'	10'	12'	trib 10'	Min Post Type	Uplift Footing (in)	8'	10'	12'	trib 10.5'	Min Post Type	Uplift Footing (in)	8'	10'	12'
On Slab	On Slab	n/a	A3					n/a	A3					n/a	A3					n/a	A3					n/a	A3				
0.042"x3"x8"	L1	6'-4"	A2	25	27	29	30	6'-1"	A2	25	28	29	31	5'-10"	A2	25	28	30	31	5'-8"	A2	25	29	30	32	5'-5"	A2	25	29	31	32
Double 3"x8"	L1/L12	9'-10"	C	29	30	32	33	9'-6"	C	29	30	32	33	9'-3"	C	29	30	31	33	8'-11"	D	29	29	31	33	8'-8"	D	30	29	31	32
Double 2"x6.625"	L2/L12	8'-11"	A3	28	28	30	31	8'-8"	C	28	28	29	31	8'-5"	C	28	28	30	31	8'-2"	C	28	29	30	32	7'-11"	C	29	29	31	32
16 G Steel C	L18	10'-1"	C	29	30	32	33	9'-8"	C	29	30	32	33	9'-2"	C	29	30	31	33	8'-9"	C	29	29	31	32	8'-4"	C	29	29	31	32
14 G Steel C	L18	12'-5"	E	31	32	34	35	11'-11"	E	31	32	33	35	11'-5"	E	31	31	33	35	11'-1"	E	32	31	33	34	10'-8"	E	32	31	32	34
12 G Steel C	L18	19'-0"	G	36	35	38	39	18'-4"	G	36	35	37	39	17'-8"	G	36	35	37	39	17'-1"	G	36	35	37	38	16'-7"	G	37	34	36	38
Double 16 G Steel C	L18/L8	20'-2"	G	36	36	38	40	19'-7"	G	37	36	38	40	19'-0"	G	37	36	38	39	18'-6"	G	37	35	37	39	18'-1"	H1	38	35	37	39
Double 14 G Steel C	L18/L8	23'-5"	H1	38	37	40	41	22'-9"	H1	39	37	39	41	22'-2"	H1	39	37	39	41	21'-7"	H1	39	37	39	41	21'-1"	H1	40	36	39	40
Double 12 G Steel C	L18/L8	31'-2"	H2	42	40	43	45	30'-3"	H2	43	40	42	44	29'-6"	H2	43	40	42	44	28'-9"	H2	43	39	42	44	28'-1"	H2	44	39	41	43

Header	Detail	trib 11'	Min Post Type	Uplift Footing (in)	Constrained Footing (in) Max Post Length 8'	10'	12'	trib 11.5'	Min Post Type	Uplift Footing (in)	8'	10'	12'	trib 12'	Min Post Type	Uplift Footing (in)	8'	10'	12'	trib 12.5'	Min Post Type	Uplift Footing (in)	8'	10'	12'	trib 13'	Min Post Type	Uplift Footing (in)	8'	10'	12'
On Slab	On Slab	n/a	A3					n/a	A3					n/a	A3					n/a	A3					n/a	A3				
0.042"x3"x8"	L1	5'-3"	A2	25	29	31	32	5'-1"	A2	26	30	31	33	4'-11"	A2	26	30	32	33	4'-9"	A2	26	30	32	34	4'-8"	A2	26	31	32	34
Double 3"x8"	L1/L12	8'-5"	D	30	29	31	32	8'-2"	D	30	30	31	33	8'-0"	D	30	30	32	33	7'-9"	D	30	30	32	34	7'-7"	D	30	31	32	34
Double 2"x6.625"	L2/L12	7'-8"	C	29	29	31	32	7'-6"	C	29	30	31	33	7'-4"	D	29	30	32	33	7'-2"	D	29	30	32	34	7'-0"	D	30	31	32	34
16 G Steel C	L18	7'-11"	C	29	29	31	32	7'-7"	C	29	30	31	33	7'-4"	C	29	30	32	33	7'-0"	C	29	30	32	34	6'-9"	D	29	31	32	34
14 G Steel C	L18	10'-4"	E	32	30	32	34	10'-0"	E	32	30	32	33	9'-8"	E	32	30	32	33	9'-5"	E	32	30	32	34	9'-1"	E	32	31	32	34
12 G Steel C	L18	16'-1"	G	37	34	36	38	15'-8"	G	37	34	36	37	15'-3"	G	37	34	36	37	14'-10"	G	37	33	35	37	14'-5"	H1	38	33	35	37
Double 16 G Steel C	L18/L8	17'-7"	H1	38	35	37	39	17'-2"	H1	38	35	37	38	16'-10"	H1	38	34	36	38	16'-5"	H1	39	34	36	38	16'-1"	H1	39	34	36	38
Double 14 G Steel C	L18/L8	20'-7"	H1	40	36	38	40	20'-1"	H1	40	36	38	40	19'-8"	H1	41	36	38	40	19'-3"	H1	41	36	38	39	18'-11"	H1	41	35	38	39
Double 12 G Steel C	L18/L8	27'-5"	H2	44	39	41	43	26'-10"	H2	44	39	41	43	26'-3"	H2	45	39	41	43	25'-9"	H3	45	38	41	42	25'-3"	H3	45	38	40	42

Ground Snow Load: 10 psf — Live Load: 10 psf — Wind Speed: 120 MPH EXPOSURE C or 140 MPH EXPOSURE B — Seismic Ss= 150% — Seismic Design Category D — Freestanding Structures

Table 2.6c (cubic footing "d")

Header	Detail	trib 3'	Min Post Type	Uplift Footing (in)	Constrained Footing (in) Max Post Length 8'	10'	12'	trib 3.5'	Min Post Type	Uplift Footing (in)	8'	10'	12'	trib 4'	Min Post Type	Uplift Footing (in)	8'	10'	12'	trib 4.5'	Min Post Type	Uplift Footing (in)	8'	10'	12'	trib 5'	Min Post Type	Uplift Footing (in)	8'	10'	12'
On Slab	On Slab	n/a	A1					n/a	A1					n/a	A1					n/a	A1					n/a	A1				
0.042"x3"x8"	L1	14'-11"	A1	20	30	32	33	13'-8"	A1	20	29	31	32	12'-7"	A1	21	29	30	32	12'-0"	A1	21	28	30	31	11'-3"	A1	22	28	29	31
Double 3"x8"	L1/L12	21'-8"	A1	23	33	35	36	19'-10"	A1	23	32	34	36	18'-5"	A1	24	31	33	35	17'-8"	A1	24	31	33	34	16'-7"	A2	24	31	32	34
Double 2"x6.625"	L2/L12	19'-2"	A1	22	30	32	34	17'-7"	A1	22	30	31	33	16'-4"	A1	23	29	31	32	15'-8"	A1	23	29	30	32	14'-9"	A1	24	28	30	31
16 G Steel C	L18	26'-4"	A1	24	34	36	38	23'-9"	A2	24	34	36	37	21'-9"	A2	25	33	35	36	20'-7"	A2	25	32	34	36	19'-1"	A3	26	32	34	35
14 G Steel C	L18	31'-4"	A2	25	36	38	40	28'-4"	A3	26	35	37	39	26'-0"	A3	26	34	36	38	24'-8"	A3	27	34	36	38	22'-11"	B	27	33	35	37
12 G Steel C	L18	40'-0"	C	28	38	40	42	40'-0"	D	29	38	40	42	37'-4"	D	30	38	40	42	35'-7"	E	30	37	39	41	33'-3"	E	31	37	39	40
Double 16 G Steel C	L18/L8	40'-0"	C	28	38	40	42	38'-9"	D	29	38	40	42	36'-1"	D	29	37	39	41	34'-7"	E	30	37	39	41	32'-8"	E	31	36	38	40
Double 14 G Steel C	L18/L8	40'-0"	C	28	38	40	42	40'-0"	D	29	38	40	42	40'-0"	E	30	38	40	42	39'-8"	E	32	38	40	42	37'-6"	E	32	38	40	42
Double 12 G Steel C	L18/L8	40'-0"	C	28	38	40	42	40'-0"	D	29	38	40	42	40'-0"	E	30	38	40	42	40'-0"	E	32	38	40	42	40'-0"	E	33	38	40	42

Header	Detail	trib 5.5'	Min Post Type	Uplift Footing (in)	Constrained Footing (in) Max Post Length 8'	10'	12'	trib 6'	Min Post Type	Uplift Footing (in)	8'	10'	12'	trib 6.5'	Min Post Type	Uplift Footing (in)	8'	10'	12'	trib 7'	Min Post Type	Uplift Footing (in)	8'	10'	12'	trib 7.5'	Min Post Type	Uplift Footing (in)	8'	10'	12'	trib 8'	Min Post Type	Uplift Footing (in)	8'	10'	12'
On Slab	On Slab	n/a	A1					n/a	A1					n/a	A1					n/a	A1					n/a	A1					n/a	A1				
0.042"x3"x8"	L1	10'-7"	A1	22	27	29	30	10'-0"	A1	22	27	29	30	9'-8"	A1	22	27	28	30	9'-3"	A1	23	26	28	29	8'-10"	A1	23	26	28	29	8'-5"	A1	23	26	27	29
Double 3"x8"	L1/L12	15'-8"	A2	25	30	32	33	14'-11"	A2	25	30	32	33	14'-5"	A2	26	30	31	33	13'-10"	A3	26	29	31	32	13'-3"	A3	26	29	31	32	12'-9"	A3	26	29	30	32
Double 2"x6.625"	L2/L12	14'-0"	A1	24	28	30	31	13'-4"	A2	24	28	29	31	12'-11"	A2	25	27	29	30	12'-4"	A2	25	27	29	30	11'-10"	A2	25	27	28	30	11'-5"	A2	25	27	28	29
16 G Steel C	L18	17'-10"	A3	26	31	33	35	16'-9"	A3	26	31	32	34	16'-1"	A3	26	30	32	34	15'-3"	A3	27	30	32	33	14'-6"	A3	27	30	31	33	13'-10"	A3	27	29	31	32
14 G Steel C	L18	21'-6"	C	28	33	35	36	20'-3"	C	28	32	34	36	19'-6"	C	28	32	34	35	18'-6"	C	28	31	33	35	17'-7"	D	29	31	33	34	16'-10"	D	29	31	33	34
12 G Steel C	L18	31'-4"	E	31	36	38	40	29'-8"	E	32	35	38	39	28'-8"	E	32	35	37	39	27'-3"	E	32	35	37	38	26'-1"	E	33	34	36	38	25'-0"	E	33	34	36	38
Double 16 G Steel C	L18/L8	30'-11"	E	31	36	38	40	29'-6"	E	31	35	37	39	28'-8"	E	32	35	37	39	27'-6"	E	32	35	37	39	26'-5"	E	33	34	36	38	25'-6"	F	33	34	36	38
Double 14 G Steel C	L18/L8	35'-7"	E	33	37	39	41	33'-11"	F	33	37	39	41	33'-0"	F	34	36	39	40	31'-8"	G	34	36	38	40	30'-6"	G	34	36	38	40	29'-5"	G	35	35	37	39
Double 12 G Steel C	L18/L8	40'-0"	F	34	38	40	42	40'-0"	G	35	38	40	42	40'-0"	G	36	38	40	42	40'-0"	H1	37	38	40	42	40'-0"	H1	38	38	40	42	38'-11"	H1	38	38	40	42

Header	Detail	trib 8.5'	Min Post Type	Uplift Footing (in)	Constrained Footing (in) Max Post Length 8'	10'	12'	trib 9'	Min Post Type	Uplift Footing (in)	8'	10'	12'	trib 9.5'	Min Post Type	Uplift Footing (in)	8'	10'	12'	trib 10'	Min Post Type	Uplift Footing (in)	8'	10'	12'	trib 10.5'	Min Post Type	Uplift Footing (in)	8'	10'	12'
On Slab	On Slab	n/a	A1					n/a	A1					n/a	A1					n/a	A1					n/a	A1				
0.042"x3"x8"	L1	8'-2"	A1	23	26	27	28	7'-11"	A1	23	25	27	28	7'-7"	A1	23	25	27	28	7'-4"	A1	24	26	27	28	7'-2"	A1	24	26	27	29
Double 3"x8"	L1/L12	12'-5"	A1	27	28	30	32	12'-0"	A1	27	28	30	31	11'-7"	A1	27	28	30	31	11'-3"	A1	27	28	29	31	11'-0"	A1	27	28	29	31
Double 2"x6.625"	L2/L12	11'-2"	A1	26	26	28	29	10'-9"	A1	26	26	28	29	10'-5"	A1	26	26	27	29	10'-1"	A1	26	26	27	29	9'-11"	A1	26	26	27	29
16 G Steel C	L18	13'-5"	A1	27	29	31	32	12'-10"	A1	27	29	30	32	12'-4"	A1	27	28	30	31	11'-10"	A1	28	28	30	31	11'-6"	A1	28	28	30	31
14 G Steel C	L18	16'-4"	A1	29	30	32	34	15'-8"	A1	29	30	32	33	15'-0"	A1	29	30	32	33	14'-6"	A1	29	30	31	33	14'-1"	A1	30	29	31	33
12 G Steel C	L18	24'-4"	A1	33	34	36	37	23'-5"	A2	33	33	35	37	22'-7"	A2	34	33	35	37	21'-10"	A3	34	33	35	36	21'-4"	A3	34	33	35	36
Double 16 G Steel C	L18/L8	24'-11"	A1	33	34	36	38	24'-2"	A2	34	34	36	37	23'-5"	A2	34	33	35	37	22'-9"	A3	34	33	35	37	22'-4"	A3	35	33	35	37
Double 14 G Steel C	L18/L8	28'-9"	A2	35	35	37	39	27'-11"	A3	35	35	37	39	27'-1"	A3	36	35	37	38	26'-4"	C	36	34	36	38	25'-10"	C	36	34	36	38
Double 12 G Steel C	L18/L8	38'-1"	B	38	38	40	42	36'-11"	C	39	37	40	42	35'-10"	D	39	37	39	41	34'-10"	E	39	37	39	41	34'-3"	E	40	37	39	41

Header	Detail	trib 11'	Min Post Type	Uplift Footing (in)	Constrained Footing (in) Max Post Length 8'	10'	12'	trib 11.5'	Min Post Type	Uplift Footing (in)	8'	10'	12'	trib 12'	Min Post Type	Uplift Footing (in)	8'	10'	12'	trib 12.5'	Min Post Type	Uplift Footing (in)	8'	10'	12'	trib 13'	Min Post Type	Uplift Footing (in)	8'	10'	12'
On Slab	On Slab	n/a	A1					n/a	A1					n/a	A1					n/a	A1					n/a	A1				
0.042"x3"x8"	L1	6'-11"	A1	24	26	28	29	6'-8"	A1	24	26	28	29	6'-6"	A1	24	27	28	30	6'-4"	A1	24	27	29	30	6'-2"	A1	24	27	29	30
Double 3"x8"	L1/L12	10'-8"	A1	28	27	29	30	10'-5"	A1	28	27	29	30	10'-1"	A1	28	27	29	30	9'-11"	A1	28	27	29	30	9'-8"	A1	28	27	29	30
Double 2"x6.625"	L2/L12	9'-8"	A1	27	26	28	29	9'-5"	A1	27	26	28	29	9'-2"	A1	27	27	28	30	9'-0"	A1	27	27	29	30	8'-9"	A1	27	27	29	30
16 G Steel C	L18	11'-1"	A1	28	28	29	31	10'-9"	A1	28	27	29	30	10'-5"	A1	28	27	29	30	10'-2"	A1	28	27	29	30	9'-10"	A1	28	27	29	30
14 G Steel C	L18	13'-8"	A1	30	29	31	32	13'-2"	A1	30	29	31	32	12'-9"	A2	30	29	30	32	12'-6"	A2	30	29	30	32	12'-2"	A2	30	28	30	31
12 G Steel C	L18	20'-8"	B	34	32	34	36	20'-1"	C	34	32	34	36	19'-6"	C	35	32	34	35	19'-2"	D	35	32	34	35	18'-7"	D	35	32	33	35
Double 16 G Steel C	L18/L8	21'-9"	C	35	33	35	36	21'-2"	C	35	33	34	36	20'-8"	D	35	32	34	36	20'-4"	D	36	32	34	36	19'-10"	D	36	32	34	36
Double 14 G Steel C	L18/L8	25'-2"	D	37	34	36	38	24'-7"	D	37	34	36	37	24'-0"	E	37	34	36	37	23'-7"	E	37	33	35	37	23'-1"	E	38	33	35	37
Double 12 G Steel C	L18/L8	33'-4"	E	40	37	39	41	32'-7"	E	40	36	38	40	31'-10"	F	41	36	38	40	31'-4"	F	41	36	38	40	30'-8"	G	41	36	38	40

Registered Professional Engineer (Civil)
CERTIFICATE NO. 39702
CARL PUTNAM
Date Signed
ARIZONA U.S.A.
Expires 09/30/2024

JAN 20 2023

SECTION 2.0 POST SPACING, POST TYPE AND FOOTING SIZE FOR LATTICE COVERS

Roof Solidity: 60%

Ground Snow Load: 15 psf   Live Load: 10 psf   Wind Speed: 110 MPH EXPOSURE C or 130 MPH EXPOSURE B   Seismic Ss= 100%   Seismic Design Category D   Structures are Attached to Existing Building

Table 2.9a

Header	Detail	trib 3'	Min Post Type	Uplift Footing (in)	Constrained Footing (in) Max Post Length 8'	10'	12'	trib 3.5'	Min Post Type	Uplift Footing (in)	8'	10'	12'	trib 4'	Min Post Type	Uplift Footing (in)	8'	10'	12'	trib 4.5'	Min Post Type	Uplift Footing (in)	8'	10'	12'
On Slab	On Slab	15'-7"	A1					13'-4"	A1					11'-8"	A1					10'-4"	A1				
0.042"x3"x8"	L1	12'-0"	A1	20	19	20	21	11'-0"	A1	20	19	20	21	10'-2"	A1	21	20	21	22	9'-6"	A1	21	21	22	23
Double 3"x8"	L1/L12	17'-8"	A1	23	19	20	21	16'-3"	A2	23	19	20	21	15'-2"	A2	24	20	21	22	14'-3"	A2	24	21	22	23
Double 2"x6.625"	L2/L12	15'-8"	A1	22	19	20	21	14'-6"	A1	22	19	20	21	13'-6"	A1	23	20	21	22	12'-8"	A2	23	21	22	23
16 G Steel C	L18	20'-7"	A2	24	19	20	21	18'-8"	A3	24	19	20	21	17'-1"	A3	25	20	21	22	15'-10"	A3	25	21	22	23
14 G Steel C	L18	24'-8"	A3	25	19	20	21	22'-5"	B	26	19	20	21	20'-7"	C	26	20	21	22	19'-2"	C	27	21	22	23
12 G Steel C	L18	35'-7"	E	29	20	21	22	32'-7"	E	29	20	21	22	30'-2"	E	30	20	22	23	28'-2"	E	30	21	22	23
Double 16 G Steel C	L18/L8	34'-7"	D	28	20	21	22	32'-0"	E	29	20	21	22	30'-0"	E	30	20	22	23	28'-3"	E	30	21	22	23
Double 14 G Steel C	L18/L8	39'-8"	E	30	20	22	23	36'-10"	E	30	21	22	23	34'-6"	E	31	21	22	23	32'-6"	F	32	21	23	24
Double 12 G Steel C	L18/L8	40'-0"	E	30	20	22	23	40'-0"	F	31	21	22	24	40'-0"	G	33	22	23	24	40'-0"	G	34	23	24	25

Header	Detail	trib 5'	Min Post Type	Uplift Footing (in)	Constrained Footing (in) Max Post Length 8'	10'	12'	trib 5.5'	Min Post Type	Uplift Footing (in)	8'	10'	12'	trib 6'	Min Post Type	Uplift Footing (in)	8'	10'	12'	trib 6.5'	Min Post Type	Uplift Footing (in)	8'	10'	12'
On Slab	On Slab	9'-4"	A1					8'-6"	A1					7'-9"	A1					7'-2"	A1				
0.042"x3"x8"	L1	8'-11"	A1	21	21	22	24	8'-5"	A1	22	22	23	24	8'-0"	A1	22	22	24	25	7'-7"	A1	22	23	24	25
Double 3"x8"	L1/L12	13'-5"	A3	24	21	22	24	12'-9"	A3	25	22	23	24	12'-2"	A3	25	22	24	25	11'-7"	A3	25	23	24	25
Double 2"x6.625"	L2/L12	12'-0"	A2	24	21	22	24	11'-5"	A2	24	22	23	24	10'-11"	A3	24	22	24	25	10'-5"	A3	25	23	24	25
16 G Steel C	L18	14'-9"	A3	25	21	22	24	13'-10"	A3	25	22	23	24	13'-0"	B	26	22	24	25	12'-4"	C	26	23	24	25
14 G Steel C	L18	17'-10"	C	27	21	22	24	16'-10"	D	27	22	23	24	15'-10"	D	27	22	24	25	15'-0"	D	28	23	24	25
12 G Steel C	L18	26'-6"	E	31	21	22	24	25'-0"	E	31	22	23	24	23'-9"	F	31	22	24	25	22'-7"	F	32	23	24	25
Double 16 G Steel C	L18/L8	26'-9"	E	31	21	22	24	25'-6"	F	31	22	23	24	24'-5"	F	32	22	24	25	23'-5"	F	32	23	24	25
Double 14 G Steel C	L18/L8	30'-10"	G	32	22	23	24	29'-5"	G	33	22	23	24	28'-2"	G	33	22	24	25	27'-1"	G	34	23	24	25
Double 12 G Steel C	L18/L8	40'-0"	H1	35	23	25	26	38'-11"	H1	36	24	25	26	37'-3"	H1	36	24	25	27	35'-10"	H1	37	24	26	27

Header	Detail	trib 7'	Min Post Type	Uplift Footing (in)	Constrained Footing (in) Max Post Length 8'	10'	12'	trib 7.5'	Min Post Type	Uplift Footing (in)	8'	10'	12'	trib 8'	Min Post Type	Uplift Footing (in)	8'	10'	12'
On Slab	On Slab	6'-8"	A1					6'-3"	A1					5'-10"	A1				
0.042"x3"x8"	L1	7'-3"	A1	22	23	24	26	6'-11"	A1	22	24	25	26	6'-8"	A1	23	24	25	27
Double 3"x8"	L1/L12	11'-2"	B	26	23	24	26	10'-8"	C	26	24	25	26	10'-4"	C	26	24	25	27
Double 2"x6.625"	L2/L12	10'-0"	A3	25	23	24	26	9'-8"	A3	25	24	25	26	9'-4"	A3	25	24	25	27
16 G Steel C	L18	11'-8"	C	26	23	24	26	11'-1"	C	26	24	25	26	10'-7"	C	26	24	25	27
14 G Steel C	L18	14'-3"	D	28	23	24	26	13'-8"	D	28	24	25	26	13'-0"	E	28	24	25	27
12 G Steel C	L18	21'-7"	F	32	23	24	26	20'-8"	G	32	24	25	26	19'-11"	G	33	24	25	27
Double 16 G Steel C	L18/L8	22'-6"	G	32	23	24	26	21'-9"	G	33	24	25	26	21'-0"	G	33	24	25	27
Double 14 G Steel C	L18/L8	26'-1"	G	34	23	24	26	25'-2"	G	34	24	25	26	24'-4"	H1	35	24	25	27
Double 12 G Steel C	L18/L8	34'-6"	H1	37	24	26	27	33'-4"	H1	38	25	26	27	32'-4"	H1	38	25	26	28

Header	Detail	trib 9'	Min Post Type	Uplift Footing (in)	Footing (in) Max Post Length 8'	10'	12'	trib 10'	Min Post Type	Uplift Footing (in)	8'	10'	12'	trib 11'	Min Post Type	Uplift Footing (in)	8'	10'	12'	trib 12'	Min Post Type	Uplift Footing (in)	8'	10'	12'
On Slab	On Slab	5'-2"	A1					4'-8"	A1					4'-3"	A1					3'-10"	A1				
0.042"x3"x8"	L1	6'-1"	A2	23	25	26	27	5'-8"	A2	23	25	27	28	5'-4"	A2	23	26	27	29	5'-0"	A2	24	27	28	29
Double 3"x8"	L1/L12	9'-7"	C	27	25	26	27	9'-0"	D	27	25	27	28	8'-6"	D	27	26	27	29	8'-1"	D	28	27	28	29
Double 2"x6.625"	L2/L12	8'-8"	B	26	25	26	27	8'-2"	C	26	25	27	28	7'-9"	C	26	26	27	29	7'-4"	C	27	27	28	29
16 G Steel C	L18	9'-9"	C	27	25	26	27	8'-10"	C	27	25	27	28	8'-0"	C	27	26	27	29	7'-4"	C	27	27	28	29
14 G Steel C	L18	12'-0"	E	29	25	26	27	11'-2"	E	29	25	27	28	10'-5"	E	29	26	27	29	9'-9"	E	29	27	28	29
12 G Steel C	L18	18'-5"	G	33	25	26	27	17'-3"	G	33	25	27	28	16'-3"	G	34	26	27	29	15'-4"	G	34	27	28	29
Double 16 G Steel C	L18/L8	19'-9"	G	34	25	26	27	18'-8"	G	34	25	27	28	17'-9"	H1	35	26	27	29	16'-11"	H1	35	27	28	29
Double 14 G Steel C	L18/L8	22'-11"	H1	36	25	26	27	21'-9"	H1	36	25	27	28	20'-8"	H1	37	26	27	29	19'-9"	H1	37	27	28	29
Double 12 G Steel C	L18/L8	30'-6"	H2	39	25	27	28	28'-11"	H2	40	26	27	28	27'-7"	H2	40	26	27	29	26'-5"	H2	41	27	28	29

Header	Detail	trib 13'	Min Post Type	Uplift Footing (in)	Footing (in) Max Post Length 8'	10'	12'	trib 14'	Min Post Type	Uplift Footing (in)	8'	10'	12'	trib 15'	Min Post Type	Uplift Footing (in)	8'	10'	12'
On Slab	On Slab	3'-7"	A1					3'-4"	A1					3'-1"	A1				
0.042"x3"x8"	L1	4'-8"	A2	24	27	29	30	4'-5"	A2	24	28	29	31	4'-2"	A2	24	28	30	31
Double 3"x8"	L1/L12	7'-8"	D	28	27	29	30	7'-3"	D	28	28	29	31	7'-0"	E	28	28	30	31
Double 2"x6.625"	L2/L12	7'-0"	D	27	27	29	30	6'-9"	D	27	28	29	31	6'-5"	D	28	28	30	31
16 G Steel C	L18	6'-10"	C	27	27	29	30	6'-4"	C	27	28	29	31	5'-11"	C	27	28	30	31
14 G Steel C	L18	9'-2"	E	30	27	29	30	8'-7"	E	30	28	29	31	8'-0"	E	30	28	30	31
12 G Steel C	L18	14'-7"	G	35	27	29	30	13'-10"	H1	35	28	29	31	13'-3"	H1	35	28	30	31
Double 16 G Steel C	L18/L8	16'-2"	H1	36	27	29	30	15'-6"	H1	36	28	29	31	14'-11"	H1	37	28	30	31
Double 14 G Steel C	L18/L8	19'-0"	H1	38	27	29	30	18'-3"	H1	38	28	29	31	17'-7"	H1	39	28	30	31
Double 12 G Steel C	L18/L8	25'-5"	H3	42	27	29	30	24'-6"	H3	42	28	29	31	23'-8"	H3	43	28	30	31

Header	Detail	trib 16'	Min Post Type	Uplift Footing (in)	Footing (in) Max Post Length 8'	10'	12'	trib 17'	Min Post Type	Uplift Footing (in)	8'	10'	12'	trib 18'	Min Post Type	Uplift Footing (in)	8'	10'	12'
On Slab	On Slab	2'-11"	A1					2'-9"	A1					2'-7"	A1				
0.042"x3"x8"	L1	4'-0"	A2	24	29	30	32	3'-9"	A2	24	29	31	32	3'-7"	A3	24	29	31	33
Double 3"x8"	L1/L12	6'-8"	E	29	29	30	32	6'-5"	E	29	29	31	32	6'-2"	E	29	29	31	33
Double 2"x6.625"	L2/L12	6'-2"	D	28	29	30	32	5'-11"	D	28	29	31	32	5'-9"	D	28	29	31	33
16 G Steel C	L18	5'-6"	C	27	29	30	32	5'-2"	C	27	29	31	32	4'-11"	C	27	29	31	33
14 G Steel C	L18	7'-6"	E	30	29	30	32	7'-1"	E	30	29	31	32	6'-8"	E	30	29	31	33
12 G Steel C	L18	12'-8"	H1	35	29	30	32	12'-2"	H1	36	29	31	32	11'-8"	H1	36	29	31	33
Double 16 G Steel C	L18/L8	14'-5"	H1	37	29	30	32	13'-11"	H1	37	29	31	32	13'-6"	H1	38	29	31	33
Double 14 G Steel C	L18/L8	17'-0"	H2	39	29	30	32	16'-6"	H2	39	29	31	32	16'-0"	H2	40	29	31	33
Double 12 G Steel C	L18/L8	22'-11"	H3	43	29	30	32	22'-2"	H3	43	29	31	32	21'-7"	H4	44	29	31	33

Amerimax Exterior Home Products
28921 US Hwy 74
Romoland, CA 92585

Carl Putnam, P. E.
3441 Ivylink Place
Lynchburg, VA 24503
carlputnam@comcast.net

Ground Snow Load: 15 psf   Live Load: 10 psf   Wind Speed: 110 MPH EXPOSURE C or 130 MPH EXPOSURE B   Seismic Ss= 100%   Seismic Design Category D   Freestanding Structures

Table 2.9b

Header	Detail	trib 3'	Min Post Type	Uplift Footing (in)	Constrained Footing (in) Max Post Length 8'	10'	12'	trib 3.5'	Min Post Type	Uplift Footing (in)	8'	10'	12'	trib 4'	Min Post Type	Uplift Footing (in)	8'	10'	12'	trib 4.5'	Min Post Type	Uplift Footing (in)	8'	10'	12'
On Slab	On Slab	n/a	A1					n/a	A1					n/a	A1					n/a	A1				
0.042"x3"x8"	L1	12'-0"	A1	17	27	29	30	11'-0"	A1	18	26	28	29	10'-2"	A1	18	26	27	29	9'-6"	A1	18	25	27	28
Double 3"x8"	L1/L12	17'-8"	A1	20	30	31	33	16'-3"	A2	20	29	31	32	15'-2"	A2	21	29	30	32	14'-3"	A2	21	28	30	31
Double 2"x6.625"	L2/L12	15'-8"	A1	19	28	29	31	14'-6"	A1	20	27	29	30	13'-6"	A1	20	27	28	29	12'-8"	A2	20	26	28	29
16 G Steel C	L18	20'-7"	A2	21	31	33	34	18'-8"	A3	21	30	32	33	17'-1"	A3	22	30	31	33	15'-10"	A3	22	29	31	32
14 G Steel C	L18	24'-8"	A3	22	32	34	36	22'-5"	B	23	32	33	35	20'-7"	C	23	31	33	34	19'-2"	C	23	30	32	34
12 G Steel C	L18	35'-7"	E	25	36	38	39	32'-7"	E	26	35	37	39	30'-2"	E	26	34	36	38	28'-2"	E	26	34	35	37
Double 16 G Steel C	L18/L8	34'-7"	D	25	35	37	39	32'-0"	E	25	35	37	38	30'-0"	E	26	34	36	38	28'-3"	E	27	34	35	37
Double 14 G Steel C	L18/L8	39'-8"	E	26	37	39	40	36'-10"	E	27	36	38	40	34'-6"	E	27	35	37	39	32'-6"	F	28	35	37	39
Double 12 G Steel C	L18/L8	40'-0"	E	26	37	39	41	40'-0"	F	27	37	39	41	40'-0"	G	29	37	39	41	40'-0"	G	30	37	39	41

Header	Detail	trib 5'	Min Post Type	Uplift Footing (in)	Constrained Footing (in) Max Post Length 8'	10'	12'	trib 5.5'	Min Post Type	Uplift Footing (in)	8'	10'	12'	trib 6'	Min Post Type	Uplift Footing (in)	8'	10'	12'	trib 6.5'	Min Post Type	Uplift Footing (in)	8'	10'	12'
On Slab	On Slab	n/a	A1					n/a	A1					n/a	A1					n/a	A1				
0.042"x3"x8"	L1	8'-11"	A1	19	25	27	28	8'-5"	A1	19	25	26	27	8'-0"	A1	19	24	26	27	7'-7"	A1	19	24	25	27
Double 3"x8"	L1/L12	13'-5"	A3	21	28	29	31	12'-9"	A3	22	27	29	30	12'-2"	A3	22	27	29	30	11'-7"	A3	22	27	28	30
Double 2"x6.625"	L2/L12	12'-0"	A2	21	26	27	29	11'-5"	A2	21	25	27	28	10'-11"	A3	21	25	27	28	10'-5"	A3	22	25	26	28
16 G Steel C	L18	14'-9"	A3	22	28	30	32	13'-10"	A3	22	28	30	31	13'-0"	B	23	28	29	31	12'-4"	C	23	27	29	30
14 G Steel C	L18	17'-10"	C	24	30	32	33	16'-10"	D	24	29	31	33	15'-10"	D	24	29	31	32	15'-0"	D	24	29	30	32
12 G Steel C	L18	26'-6"	E	27	33	35	37	25'-0"	E	27	33	34	36	23'-9"	F	28	32	34	36	22'-7"	F	28	32	34	35
Double 16 G Steel C	L18/L8	26'-9"	E	27	33	35	37	25'-6"	F	27	33	35	36	24'-5"	F	28	32	34	36	23'-5"	F	28	32	34	35
Double 14 G Steel C	L18/L8	30'-10"	G	28	34	36	38	29'-5"	G	29	34	36	38	28'-2"	G	29	34	35	37	27'-1"	G	30	33	35	37
Double 12 G Steel C	L18/L8	40'-0"	H1	31	37	39	41	38'-11"	H1	32	36	38	40	37'-3"	H1	32	36	38	40	35'-10"	H1	32	36	38	39

Header	Detail	trib 7'	Min Post Type	Uplift Footing (in)	Constrained Footing (in) Max Post Length 8'	10'	12'	trib 7.5'	Min Post Type	Uplift Footing (in)	8'	10'	12'	trib 8'	Min Post Type	Uplift Footing (in)	8'	10'	12'
On Slab	On Slab	n/a	A1					n/a	A1					n/a	A1				
0.042"x3"x8"	L1	7'-3"	A1	20	24	25	26	6'-11"	A1	20	23	25	26	6'-8"	A1	20	23	25	26
Double 3"x8"	L1/L12	11'-2"	B	23	26	28	29	10'-8"	C	23	26	28	29	10'-4"	C	23	26	27	29
Double 2"x6.625"	L2/L12	10'-0"	A3	22	25	26	27	9'-8"	A3	22	24	26	27	9'-4"	A3	22	24	26	27
16 G Steel C	L18	11'-8"	C	23	27	28	30	11'-1"	C	23	26	28	29	10'-7"	C	23	26	28	29
14 G Steel C	L18	14'-3"	D	24	28	30	31	13'-8"	D	25	28	30	31	13'-0"	E	25	28	29	31
12 G Steel C	L18	21'-7"	F	28	31	33	35	20'-8"	G	28	31	33	34	19'-11"	G	29	31	32	34
Double 16 G Steel C	L18/L8	22'-6"	G	28	32	34	35	21'-9"	G	29	31	33	35	21'-0"	G	29	31	33	34
Double 14 G Steel C	L18/L8	26'-1"	G	30	33	35	36	25'-2"	G	30	33	34	36	24'-4"	H1	31	32	34	36
Double 12 G Steel C	L18/L8	34'-6"	H1	33	35	37	39	33'-4"	H1	33	35	37	39	32'-4"	H1	34	35	37	38

Header	Detail	trib 9'	Min Post Type	Uplift Footing (in)	cubic footing "d" Constrained Footing (in) Max Post Length 8'	10'	12'	trib 10'	Min Post Type	Uplift Footing (in)	8'	10'	12'	trib 11'	Min Post Type	Uplift Footing (in)	8'	10'	12'	trib 12'	Min Post Type	Uplift Footing (in)	8'	10'	12'
On Slab	On Slab	n/a	A1					n/a	A1					n/a	A1					n/a	A1				
0.042"x3"x8"	L1	6'-1"	A2	20	24	25	26	5'-8"	A2	20	24	26	27	5'-4"	A2	20	25	26	28	5'-0"	A2	21	26	27	28
Double 3"x8"	L1/L12	9'-7"	C	23	26	27	28	9'-0"	D	24	25	27	28	8'-6"	D	24	25	26	28	8'-1"	D	24	26	27	28
Double 2"x6.625"	L2/L12	8'-8"	B	23	24	25	26	8'-2"	C	23	24	26	27	7'-9"	C	23	25	26	28	7'-4"	C	24	26	27	28
16 G Steel C	L18	9'-9"	C	23	26	27	28	8'-10"	C	24	25	26	28	8'-0"	C	24	25	26	28	7'-4"	C	24	26	27	28
14 G Steel C	L18	12'-0"	E	25	27	29	30	11'-2"	E	25	26	28	29	10'-5"	E	26	26	28	29	9'-9"	E	26	26	27	28
12 G Steel C	L18	18'-5"	G	29	30	32	33	17'-3"	G	29	30	31	33	16'-3"	G	30	29	31	32	15'-4"	G	30	29	30	32
Double 16 G Steel C	L18/L8	19'-9"	G	30	31	32	34	18'-8"	G	30	30	32	33	17'-9"	H1	31	30	32	33	16'-11"	H1	31	29	31	33
Double 14 G Steel C	L18/L8	22'-11"	H1	31	32	34	35	21'-9"	H1	32	31	33	35	20'-8"	H1	32	31	33	34	19'-9"	H1	33	31	32	34
Double 12 G Steel C	L18/L8	30'-6"	H2	34	34	36	38	28'-11"	H2	35	34	36	37	27'-7"	H2	35	33	35	37	26'-5"	H2	36	33	35	37

Header	Detail	trib 13'	Min Post Type	Uplift Footing (in)	cubic footing "d" Constrained Footing (in) Max Post Length 8'	10'	12'	trib 14'	Min Post Type	Uplift Footing (in)	8'	10'	12'	trib 15'	Min Post Type	Uplift Footing (in)	8'	10'	12'
On Slab	On Slab	n/a	A1					n/a	A1					n/a	A1				
0.042"x3"x8"	L1	4'-8"	A2	21	26	28	29	4'-5"	A2	21	27	28	29	4'-2"	A2	21	27	29	30
Double 3"x8"	L1/L12	7'-8"	D	24	26	28	29	7'-3"	D	25	27	28	29	7'-0"	E	25	27	29	30
Double 2"x6.625"	L2/L12	7'-0"	D	24	26	28	29	6'-9"	D	24	27	28	29	6'-5"	D	24	27	29	30
16 G Steel C	L18	6'-10"	C	24	26	28	29	6'-4"	C	24	27	28	29	5'-11"	C	24	27	29	30
14 G Steel C	L18	9'-2"	E	26	26	28	29	8'-7"	E	26	27	28	29	8'-0"	E	26	27	29	30
12 G Steel C	L18	14'-7"	G	30	28	30	31	13'-10"	H1	31	28	30	31	13'-3"	H1	31	28	29	31
Double 16 G Steel C	L18/L8	16'-2"	H1	31	29	31	32	15'-6"	H1	32	29	30	32	14'-11"	H1	32	29	30	32
Double 14 G Steel C	L18/L8	19'-0"	H1	33	30	32	34	18'-3"	H1	33	30	32	33	17'-7"	H1	34	30	31	33
Double 12 G Steel C	L18/L8	25'-5"	H3	36	33	35	36	24'-6"	H3	37	32	34	36	23'-8"	H3	37	32	34	36

Header	Detail	trib 16'	Min Post Type	Uplift Footing (in)	cubic footing "d" Constrained Footing (in) Max Post Length 8'	10'	12'	trib 17'	Min Post Type	Uplift Footing (in)	8'	10'	12'	trib 18'	Min Post Type	Uplift Footing (in)	8'	10'	12'
On Slab	On Slab	n/a	A1					n/a	A1					n/a	A1				
0.042"x3"x8"	L1	4'-0"	A2	21	28	29	31	3'-9"	A2	21	28	30	31	3'-7"	A3	21	28	30	31
Double 3"x8"	L1/L12	6'-8"	E	25	28	29	31	6'-5"	E	25	28	30	31	6'-2"	E	25	28	30	31
Double 2"x6.625"	L2/L12	6'-2"	D	24	28	29	31	5'-11"	D	25	28	30	31	5'-9"	D	25	28	30	31
16 G Steel C	L18	5'-6"	C	24	28	29	31	5'-2"	C	24	28	30	31	4'-11"	C	24	28	30	31
14 G Steel C	L18	7'-6"	E	26	28	29	31	7'-1"	E	26	28	30	31	6'-8"	E	26	28	30	31
12 G Steel C	L18	12'-8"	H1	31	28	29	31	12'-2"	H1	31	28	30	31	11'-8"	H1	31	28	30	31
Double 16 G Steel C	L18/L8	14'-5"	H1	32	28	30	31	13'-11"	H1	33	28	30	31	13'-6"	H1	33	28	30	31
Double 14 G Steel C	L18/L8	17'-0"	H2	34	29	31	33	16'-6"	H2	35	29	31	32	16'-0"	H2	35	29	31	32
Double 12 G Steel C	L18/L8	22'-11"	H3	38	32	34	35	22'-2"	H3	38	32	33	35	21'-7"	H4	38	31	33	35

Ground Snow Load: 15 psf   Live Load: 10 psf   Wind Speed: 110 MPH EXPOSURE B   Seismic Ss= 100%   Seismic Design Category D   Structures are Attached to Existing Building

Table 2.9c

Header	Detail	trib 3'	Min Post Type	Uplift Footing (in)	Constrained Footing (in) Max Post Length 8'	10'	12'	trib 3.5'	Min Post Type	Uplift Footing (in)	8'	10'	12'	trib 4'	Min Post Type	Uplift Footing (in)	8'	10'	12'	trib 4.5'	Min Post Type	Uplift Footing (in)	8'	10'	12'
On Slab	On Slab	15'-7"	A1					13'-4"	A1					11'-8"	A1					10'-4"	A1				
0.042"x3"x8"	L1	12'-0"	A1	18	17	18	19	11'-0"	A1	18	18	19	20	10'-2"	A1	18	18	19	20	9'-6"	A1	19	19	20	21
Double 3"x8"	L1/L12	17'-8"	A1	20	17	18	19	16'-3"	A2	21	18	19	20	15'-2"	A2	21	18	19	20	14'-3"	A2	21	19	20	21
Double 2"x6.625"	L2/L12	15'-8"	A1	19	17	18	19	14'-6"	A1	20	18	19	20	13'-6"	A1	20	18	19	20	12'-8"	A2	21	19	20	21
16 G Steel C	L18	20'-7"	A2	21	17	18	19	18'-8"	A3	21	18	19	20	17'-1"	A3	22	18	19	20	15'-10"	A3	22	19	20	21
14 G Steel C	L18	24'-8"	A3	22	18	19	20	22'-5"	B	23	18	19	20	20'-7"	C	23	19	20	21	19'-2"	C	24	19	20	21
12 G Steel C	L18	35'-7"	E	25	20	21	22	32'-7"	E	26	20	21	22	30'-2"	E	26	20	22	23	28'-2"	E	27	21	22	23
Double 16 G Steel C	L18/L8	34'-7"	D	25	20	21	22	32'-0"	E	26	20	21	22	30'-0"	E	26	20	22	23	28'-3"	E	27	21	22	23
Double 14 G Steel C	L18/L8	39'-8"	E	26	20	22	23	36'-10"	E	27	21	22	23	34'-6"	E	28	21	22	23	32'-6"	F	28	21	23	24
Double 12 G Steel C	L18/L8	40'-0"	E	26	20	22	23	40'-0"	F	28	21	22	24	40'-0"	G	29	22	23	24	40'-0"	G	30	23	24	25

Header	Detail	trib 5'	Min Post Type	Uplift Footing (in)	Constrained Footing (in) Max Post Length 8'	10'	12'	trib 5.5'	Min Post Type	Uplift Footing (in)	8'	10'	12'	trib 6'	Min Post Type	Uplift Footing (in)	8'	10'	12'	trib 6.5'	Min Post Type	Uplift Footing (in)	8'	10'	12'
On Slab	On Slab	9'-4"	A1					8'-6"	A1					7'-9"	A1					7'-2"	A1				
0.042"x3"x8"	L1	8'-11"	A1	19	19	21	22	8'-5"	A1	19	20	21	22	8'-0"	A1	19	20	22	23	7'-7"	A1	20	21	22	23
Double 3"x8"	L1/L12	13'-5"	A3	22	19	21	22	12'-9"	A3	22	20	21	22	12'-2"	A3	22	20	22	23	11'-7"	A3	23	21	22	23
Double 2"x6.625"	L2/L12	12'-0"	A2	21	19	21	22	11'-5"	A2	21	20	21	22	10'-11"	A3	22	20	22	23	10'-5"	A3	22	21	22	23
16 G Steel C	L18	14'-9"	A3	22	19	21	22	13'-10"	A3	23	20	21	22	13'-0"	B	23	20	22	23	12'-4"	C	23	21	22	23
14 G Steel C	L18	17'-10"	C	24	19	21	22	16'-10"	D	24	20	21	22	15'-10"	D	24	20	22	23	15'-0"	D	25	21	22	23
12 G Steel C	L18	26'-6"	E	27	21	22	23	25'-0"	E	28	21	22	23	23'-9"	F	28	21	23	24	22'-7"	F	28	22	23	24
Double 16 G Steel C	L18/L8	26'-9"	E	27	21	22	23	25'-6"	F	28	21	23	24	24'-5"	F	28	21	23	24	23'-5"	F	28	22	23	24
Double 14 G Steel C	L18/L8	30'-10"	G	29	22	23	24	29'-5"	G	29	22	23	24	28'-2"	G	29	22	24	25	27'-1"	G	30	23	24	25
Double 12 G Steel C	L18/L8	40'-0"	H1	31	23	25	26	38'-11"	H1	32	24	25	26	37'-3"	H1	32	24	25	27	35'-10"	H1	33	24	26	27

Header	Detail	trib 7'	Min Post Type	Uplift Footing (in)	Constrained Footing (in) Max Post Length 8'	10'	12'	trib 7.5'	Min Post Type	Uplift Footing (in)	8'	10'	12'	trib 8'	Min Post Type	Uplift Footing (in)	8'	10'	12'
On Slab	On Slab	6'-8"	A1					6'-3"	A1					5'-10"	A1				
0.042"x3"x8"	L1	7'-3"	A1	20	21	22	24	6'-11"	A1	20	22	23	24	6'-8"	A1	20	22	23	24
Double 3"x8"	L1/L12	11'-2"	B	23	21	22	24	10'-8"	C	23	22	23	24	10'-4"	C	23	22	23	24
Double 2"x6.625"	L2/L12	10'-0"	A3	22	21	22	24	9'-8"	A3	22	22	23	24	9'-4"	A3	22	22	23	24
16 G Steel C	L18	11'-8"	C	23	21	22	24	11'-1"	C	23	22	23	24	10'-7"	C	23	22	23	24
14 G Steel C	L18	14'-3"	D	25	21	22	24	13'-8"	D	25	22	23	24	13'-0"	E	25	22	23	24
12 G Steel C	L18	21'-7"	F	28	22	23	24	20'-8"	G	29	22	23	24	19'-11"	G	29	22	23	24
Double 16 G Steel C	L18/L8	22'-6"	G	29	22	23	24	21'-9"	G	29	22	23	24	21'-0"	G	29	22	24	25
Double 14 G Steel C	L18/L8	26'-1"	G	30	23	24	25	25'-2"	G	31	23	24	25	24'-4"	H1	31	23	24	26
Double 12 G Steel C	L18/L8	34'-6"	H1	33	24	26	27	33'-4"	H1	34	25	26	27	32'-4"	H1	34	25	26	28

Header	Detail	trib 9'	Min Post Type	Uplift Footing (in)	cubic footing "d" Constrained Footing (in) Max Post Length 8'	10'	12'	trib 10'	Min Post Type	Uplift Footing (in)	8'	10'	12'	trib 11'	Min Post Type	Uplift Footing (in)	8'	10'	12'	trib 12'	Min Post Type	Uplift Footing (in)	8'	10'	12'
On Slab	On Slab	5'-2"	A1					4'-8"	A1					4'-3"	A1					3'-10"	A1				
0.042"x3"x8"	L1	6'-1"	A1	20	23	24	25	5'-8"	A1	21	23	25	26	5'-4"	A1	21	24	25	26	5'-0"	A1	21	24	26	27
Double 3"x8"	L1/L12	9'-7"	A1	24	23	24	25	9'-0"	A1	24	23	25	26	8'-6"	A1	24	24	25	26	8'-1"	A1	24	24	26	27
Double 2"x6.625"	L2/L12	8'-8"	A1	23	23	24	25	8'-2"	A1	23	23	25	26	7'-9"	A1	24	24	25	26	7'-4"	A1	24	24	26	27
16 G Steel C	L18	9'-9"	A1	24	23	24	25	8'-10"	A1	24	23	25	26	8'-0"	A1	24	24	25	26	7'-4"	A1	24	24	26	27
14 G Steel C	L18	12'-0"	A1	25	23	24	25	11'-2"	A1	26	23	25	26	10'-5"	A1	26	24	25	26	9'-9"	A1	26	24	26	27
12 G Steel C	L18	18'-5"	A2	29	23	24	25	17'-3"	A2	30	23	25	26	16'-3"	A2	30	24	25	26	15'-4"	A3	30	24	26	27
Double 16 G Steel C	L18/L8	19'-9"	A2	30	23	24	25	18'-8"	A3	30	23	25	26	17'-9"	A3	31	24	25	26	16'-11"	A3	31	24	26	27
Double 14 G Steel C	L18/L8	22'-11"	A3	32	23	25	26	21'-9"	A3	32	24	25	26	20'-8"	C	33	24	25	27	19'-9"	C	33	24	26	27
Double 12 G Steel C	L18/L8	30'-6"	D	35	25	27	28	28'-11"	D	35	26	27	28	27'-7"	E	36	26	27	29	26'-5"	E	36	26	28	29

Header	Detail	trib 13'	Min Post Type	Uplift Footing (in)	cubic footing "d" Constrained Footing (in) Max Post Length 8'	10'	12'	trib 14'	Min Post Type	Uplift Footing (in)	8'	10'	12'	trib 15'	Min Post Type	Uplift Footing (in)	8'	10'	12'
On Slab	On Slab	3'-7"	A1					3'-4"	A1					3'-1"	A1				
0.042"x3"x8"	L1	4'-8"	A1	21	25	26	28	4'-5"	A1	21	25	27	28	4'-2"	A1	21	26	27	29
Double 3"x8"	L1/L12	7'-8"	A1	25	25	26	28	7'-3"	A1	25	25	27	28	7'-0"	A1	25	26	27	29
Double 2"x6.625"	L2/L12	7'-0"	A1	24	25	26	28	6'-9"	A1	24	25	27	28	6'-5"	A1	25	26	27	29
16 G Steel C	L18	6'-10"	A1	24	25	26	28	6'-4"	A1	24	25	27	28	5'-11"	A1	24	26	27	29
14 G Steel C	L18	9'-2"	A1	26	25	26	28	8'-7"	A1	26	25	27	28	8'-0"	A1	26	26	27	29
12 G Steel C	L18	14'-7"	A3	31	25	26	28	13'-10"	A3	31	25	27	28	13'-3"	C	31	26	27	29
Double 16 G Steel C	L18/L8	16'-2"	C	32	25	26	28	15'-6"	C	32	25	27	28	14'-11"	D	32	26	27	29
Double 14 G Steel C	L18/L8	19'-0"	D	33	25	26	28	18'-3"	D	34	25	27	28	17'-7"	E	34	26	27	29
Double 12 G Steel C	L18/L8	25'-5"	E	37	26	28	29	24'-6"	E	37	27	28	30	23'-8"	F	38	27	29	30

Header	Detail	trib 16'	Min Post Type	Uplift Footing (in)	cubic footing "d" Constrained Footing (in) Max Post Length 8'	10'	12'	trib 17'	Min Post Type	Uplift Footing (in)	8'	10'	12'	trib 18'	Min Post Type	Uplift Footing (in)	8'	10'	12'
On Slab	On Slab	2'-11"	A1					2'-9"	A1					2'-7"	A1				
0.042"x3"x8"	L1	4'-0"	A1	21	26	28	29	3'-9"	A1	21	27	28	29	3'-7"	A1	22	27	29	30
Double 3"x8"	L1/L12	6'-8"	A1	25	26	28	29	6'-5"	A1	26	27	28	29	6'-2"	A1	26	27	29	30
Double 2"x6.625"	L2/L12	6'-2"	A1	25	26	28	29	5'-11"	A1	25	27	28	29	5'-9"	A1	25	27	29	30
16 G Steel C	L18	5'-6"	A1	24	26	28	29	5'-2"	A1	24	27	28	29	4'-11"	A1	24	27	29	30
14 G Steel C	L18	7'-6"	A1	26	26	28	29	7'-1"	A1	26	27	28	29	6'-8"	A1	26	27	29	30
12 G Steel C	L18	12'-8"	C	31	26	28	29	12'-2"	C	32	27	28	29	11'-8"	C	32	27	29	30
Double 16 G Steel C	L18/L8	14'-5"	D	33	26	28	29	13'-11"	D	33	27	28	29	13'-6"	D	33	27	29	30
Double 14 G Steel C	L18/L8	17'-0"	E	35	26	28	29	16'-6"	E	35	27	28	29	16'-0"	E	35	27	29	30
Double 12 G Steel C	L18/L8	22'-11"	F	38	27	29	30	22'-2"	G	39	27	29	30	21'-7"	G	39	28	29	31

SECTION 2.0 POST SPACING, POST TYPE AND FOOTING SIZE FOR LATTICE COVERS

Roof Solidity: 60%

Ground Snow Load: 15 psf **Live Load: 10 psf** **Wind Speed: 115 MPH EXPOSURE C or 130 MPH EXPOSURE B** **Seismic Ss= 100%** **Seismic Design Category D** **Structures are Attached to Existing Building**

Table 2.10a (cubic footing "d"; Constrained Footing (in) by Max Post Length)

Header	Detail	trib 3'	Min Post Type	Uplift Footing (in)	8'	10'	12'	trib 3.5'	Min Post Type	Uplift Footing (in)	8'	10'	12'	trib 4'	Min Post Type	Uplift Footing (in)	8'	10'	12'	trib 4.5'	Min Post Type	Uplift Footing (in)	8'	10'	12'	trib 5'	Min Post Type	Uplift Footing (in)	8'	10'	12'	trib 5.5'	Min Post Type	Uplift Footing (in)	8'	10'	12'	trib 6'	Min Post Type	Uplift Footing (in)	8'	10'	12'	trib 6.5'	Min Post Type	Uplift Footing (in)	8'	10'	12'	trib 7'	Min Post Type	Uplift Footing (in)	8'	10'	12'	trib 7.5'	Min Post Type	Uplift Footing (in)	8'	10'	12'	trib 8'	Min Post Type	Uplift Footing (in)	8'	10'	12'
On Slab	On Slab	15'-7"	A1					13'-4"	A1					11'-8"	A1					10'-4"	A1					9'-4"	A1					8'-6"	A1					7'-9"	A1					7'-2"	A1					6'-8"	A1					6'-3"	A1					5'-10"	A1				
0.042"x3"x8"	L1	12'-0"	A1	20	19	20	21	11'-0"	A1	21	20	21	22	10'-2"	A1	21	20	22	23	9'-6"	A1	22	21	22	23	8'-11"	A1	22	22	23	24	8'-5"	A1	22	22	24	25	8'-0"	A1	23	23	24	25	7'-7"	A1	23	23	25	26	7'-3"	A1	23	24	25	26	6'-11"	A1	23	24	25	27	6'-8"	A1	23	24	26	27
Double 3"x8"	L1/L12	17'-8"	A1	23	19	20	21	16'-3"	A2	24	20	21	22	15'-2"	A2	24	20	22	23	14'-3"	A2	25	21	22	23	13'-5"	A3	25	22	23	24	12'-9"	A3	26	22	24	25	12'-2"	A3	26	23	24	25	11'-7"	A3	26	23	25	26	11'-2"	B	27	24	25	26	10'-8"	C	27	24	25	27	10'-4"	C	27	24	26	27
Double 2"x6.625"	L2/L12	15'-8"	A1	22	19	20	21	14'-6"	A1	23	20	21	22	13'-6"	A1	23	20	22	23	12'-8"	A2	24	21	22	23	12'-0"	A2	24	22	23	24	11'-5"	A2	25	22	24	25	10'-11"	A3	25	23	24	25	10'-5"	A3	25	23	25	26	10'-0"	A3	26	24	25	26	9'-8"	A3	26	24	25	27	9'-4"	A3	26	24	26	27
16 G Steel C	L18	20'-7"	A2	25	19	20	21	18'-8"	A3	25	20	21	22	17'-1"	A3	25	20	22	23	15'-10"	A3	26	21	22	23	14'-9"	A3	26	22	23	24	13'-10"	A3	26	22	24	25	13'-0"	B	27	23	24	25	12'-4"	C	27	23	25	26	11'-8"	C	27	24	25	26	11'-1"	C	27	24	25	27	10'-7"	C	27	24	26	27
14 G Steel C	L18	24'-8"	A3	26	19	20	21	22'-5"	B	27	20	21	22	20'-7"	C	27	20	22	23	19'-2"	C	27	21	22	23	17'-10"	C	28	22	23	24	16'-10"	D	28	22	24	25	15'-10"	D	28	23	24	25	15'-0"	D	29	23	25	26	14'-3"	D	29	24	25	26	13'-8"	D	29	24	25	27	13'-0"	E	29	24	26	27
12 G Steel C	L18	35'-7"	E	29	20	21	22	32'-7"	E	30	20	21	22	30'-2"	E	31	20	22	23	28'-2"	E	31	21	22	23	26'-6"	E	32	22	23	24	25'-0"	E	32	22	24	25	23'-9"	F	32	23	24	25	22'-7"	F	33	23	25	26	21'-7"	F	33	24	25	26	20'-8"	G	33	24	25	27	19'-11"	G	34	24	26	27
Double 16 G Steel C	L18/L8	34'-7"	D	29	20	21	22	32'-0"	E	30	20	21	22	30'-0"	E	31	20	22	23	28'-3"	E	31	21	22	23	26'-9"	E	32	22	23	24	25'-6"	F	32	22	24	25	24'-5"	F	33	23	24	25	23'-5"	F	33	23	25	26	22'-6"	G	33	24	25	26	21'-9"	G	34	24	25	27	21'-0"	G	34	24	26	27
Double 14 G Steel C	L18/L8	39'-8"	E	30	20	22	23	36'-10"	E	31	21	22	23	34'-6"	E	32	21	22	23	32'-6"	F	33	21	23	24	30'-10"	G	33	22	23	24	29'-5"	G	34	22	24	25	28'-2"	G	34	23	24	25	27'-1"	G	35	23	25	26	26'-1"	G	35	24	25	26	25'-2"	G	36	24	25	27	24'-4"	H1	36	24	26	27
Double 12 G Steel C	L18/L8	40'-0"	E	31	20	22	23	40'-0"	F	32	21	22	24	40'-0"	G	34	22	23	24	40'-0"	G	35	23	24	25	40'-0"	H1	36	23	25	26	38'-11"	H1	37	24	25	26	37'-3"	H1	38	24	25	27	35'-10"	H1	38	24	26	27	34'-6"	H1	39	24	26	27	33'-4"	H1	39	25	26	27	32'-4"	H1	39	25	26	28

Header	Detail	trib 9'	Min Post Type	Uplift Footing (in)	8'	10'	12'	trib 10'	Min Post Type	Uplift Footing (in)	8'	10'	12'	trib 11'	Min Post Type	Uplift Footing (in)	8'	10'	12'	trib 12'	Min Post Type	Uplift Footing (in)	8'	10'	12'	trib 13'	Min Post Type	Uplift Footing (in)	8'	10'	12'	trib 14'	Min Post Type	Uplift Footing (in)	8'	10'	12'	trib 15'	Min Post Type	Uplift Footing (in)	8'	10'	12'	trib 16'	Min Post Type	Uplift Footing (in)	8'	10'	12'	trib 17'	Min Post Type	Uplift Footing (in)	8'	10'	12'	trib 18'	Min Post Type	Uplift Footing (in)	8'	10'	12'
On Slab	On Slab	5'-2"	A1					4'-8"	A1					4'-3"	A1					3'-10"	A1					3'-7"	A1					3'-4"	A1					3'-1"	A1					2'-11"	A1					2'-9"	A1					2'-7"	A1				
0.042"x3"x8"	L1	6'-1"	A2	24	25	27	28	5'-8"	A2	24	26	27	29	5'-4"	A2	24	27	28	29	5'-0"	A2	24	27	29	30	4'-8"	A2	24	28	29	31	4'-5"	A2	25	28	30	31	4'-2"	A2	25	29	30	32	4'-0"	A2	25	29	31	32	3'-9"	A2	25	30	31	33	3'-7"	A3	25	30	32	33
Double 3"x8"	L1/L12	9'-7"	C	27	25	27	28	9'-0"	D	28	26	27	29	8'-6"	D	28	27	28	29	8'-1"	D	28	27	29	30	7'-8"	D	29	28	29	31	7'-3"	D	29	28	30	31	7'-0"	E	29	29	30	32	6'-8"	E	29	29	31	32	6'-5"	E	30	30	31	33	6'-2"	E	30	30	32	33
Double 2"x6.625"	L2/L12	8'-8"	B	27	25	27	28	8'-2"	C	27	26	27	29	7'-9"	C	27	27	28	29	7'-4"	C	28	27	29	30	7'-0"	D	28	28	29	31	6'-9"	D	28	28	30	31	6'-5"	D	28	29	30	32	6'-2"	D	29	29	31	32	5'-11"	D	29	30	31	33	5'-9"	D	29	30	32	33
16 G Steel C	L18	9'-9"	C	28	25	27	28	8'-10"	C	28	26	27	29	8'-0"	C	28	27	28	29	7'-4"	C	28	27	29	30	6'-10"	C	28	28	29	31	6'-4"	C	28	28	30	31	5'-11"	C	28	29	30	32	5'-6"	C	28	29	31	32	5'-2"	C	28	30	31	33	4'-11"	C	28	30	32	33
14 G Steel C	L18	12'-0"	E	30	25	27	28	11'-2"	E	30	26	27	29	10'-5"	E	30	27	28	29	9'-9"	E	30	27	29	30	9'-2"	E	31	28	29	31	8'-7"	E	31	28	30	31	8'-0"	E	31	29	30	32	7'-6"	E	31	29	31	32	7'-1"	E	31	30	31	33	6'-8"	E	31	30	32	33
12 G Steel C	L18	18'-5"	G	34	25	27	28	17'-3"	G	35	26	27	29	16'-3"	G	35	27	28	29	15'-4"	G	35	27	29	30	14'-7"	G	36	28	29	31	13'-10"	H1	36	28	30	31	13'-3"	H1	36	29	30	32	12'-8"	H1	36	29	31	32	12'-2"	H1	37	30	31	33	11'-8"	H1	37	30	32	33
Double 16 G Steel C	L18/L8	19'-9"	G	35	25	27	28	18'-8"	G	35	26	27	29	17'-9"	H1	36	27	28	29	16'-11"	H1	36	27	29	30	16'-2"	H1	37	28	29	31	15'-6"	H1	37	28	30	31	14'-11"	H1	38	29	30	32	14'-5"	H1	38	29	31	32	13'-11"	H1	38	30	31	33	13'-6"	H1	39	30	32	33
Double 14 G Steel C	L18/L8	22'-11"	H1	37	25	27	28	21'-9"	H1	37	26	27	29	20'-8"	H1	38	27	28	29	19'-9"	H1	38	27	29	30	19'-0"	H1	39	28	29	31	18'-3"	H1	39	28	30	31	17'-7"	H1	40	29	30	32	17'-0"	H2	40	29	31	32	16'-6"	H2	41	30	31	33	16'-0"	H2	41	30	32	33
Double 12 G Steel C	L18/L8	30'-6"	H2	40	25	27	28	28'-11"	H2	41	26	27	29	27'-7"	H2	42	27	28	29	26'-5"	H2	42	27	29	30	25'-5"	H3	43	28	29	31	24'-6"	H3	43	28	30	31	23'-8"	H3	44	29	30	32	22'-11"	H3	44	29	31	32	22'-2"	H3	45	30	31	33	21'-7"	H4	45	30	32	33

Amerimax Exterior Home Products
28921 US Hwy 74
Romoland, CA 92585

Carl Putnam, P. E.
3441 Ivylink Place
Lynchburg, VA 24503
carlputnam@comcast.net

Ground Snow Load: 15 psf **Live Load: 10 psf** **Wind Speed: 115 MPH EXPOSURE C or 130 MPH EXPOSURE B** **Seismic Ss= 100%** **Seismic Design Category D** **Freestanding Structures**

Table 2.10b (cubic footing "d"; Constrained Footing (in) by Max Post Length)

Header	Detail	trib 3'	Min Post Type	Uplift Footing (in)	8'	10'	12'	trib 3.5'	Min Post Type	Uplift Footing (in)	8'	10'	12'	trib 4'	Min Post Type	Uplift Footing (in)	8'	10'	12'	trib 4.5'	Min Post Type	Uplift Footing (in)	8'	10'	12'	trib 5'	Min Post Type	Uplift Footing (in)	8'	10'	12'	trib 5.5'	Min Post Type	Uplift Footing (in)	8'	10'	12'	trib 6'	Min Post Type	Uplift Footing (in)	8'	10'	12'	trib 6.5'	Min Post Type	Uplift Footing (in)	8'	10'	12'	trib 7'	Min Post Type	Uplift Footing (in)	8'	10'	12'	trib 7.5'	Min Post Type	Uplift Footing (in)	8'	10'	12'	trib 8'	Min Post Type	Uplift Footing (in)	8'	10'	12'
On Slab	On Slab	n/a	A1					n/a	A1					n/a	A1					n/a	A1					n/a	A1					n/a	A1					n/a	A1					n/a	A1					n/a	A1					n/a	A1					n/a	A1				
0.042"x3"x8"	L1	12'-0"	A1	18	28	29	31	11'-0"	A1	18	27	29	30	10'-2"	A1	19	26	28	29	9'-6"	A1	19	26	28	29	8'-11"	A1	19	26	27	28	8'-5"	A1	20	25	27	28	8'-0"	A1	20	25	26	28	7'-7"	A1	20	25	26	27	7'-3"	A1	20	24	26	27	6'-11"	A1	20	24	25	27	6'-8"	A1	20	24	25	26
Double 3"x8"	L1/L12	17'-8"	A1	20	30	32	34	16'-3"	A2	21	30	32	33	15'-2"	A2	21	29	31	32	14'-3"	A2	22	29	31	32	13'-5"	A3	22	28	30	31	12'-9"	A3	22	28	30	31	12'-2"	A3	23	28	29	31	11'-7"	A3	23	27	29	30	11'-2"	B	23	27	29	30	10'-8"	C	23	27	28	30	10'-4"	C	24	27	28	29
Double 2"x6.625"	L2/L12	15'-8"	A1	20	28	30	31	14'-6"	A1	20	28	29	31	13'-6"	A1	21	27	29	30	12'-8"	A2	21	27	28	30	12'-0"	A2	21	26	28	29	11'-5"	A2	22	26	28	29	10'-11"	A3	22	26	27	28	10'-5"	A3	22	25	27	28	10'-0"	A3	22	25	27	28	9'-8"	A3	23	25	26	28	9'-4"	A3	23	25	26	27
16 G Steel C	L18	20'-7"	A2	22	32	33	35	18'-8"	A3	22	31	33	34	17'-1"	A3	22	30	32	33	15'-10"	A3	23	30	31	33	14'-9"	A3	23	29	31	32	13'-10"	A3	23	29	30	32	13'-0"	B	23	28	30	31	12'-4"	C	23	28	29	31	11'-8"	C	24	27	29	30	11'-1"	C	24	27	29	30	10'-7"	C	24	27	28	30
14 G Steel C	L18	24'-8"	A3	23	33	35	37	22'-5"	B	23	32	34	36	20'-7"	C	24	32	34	35	19'-2"	C	24	31	33	34	17'-10"	C	24	31	32	34	16'-10"	D	25	30	32	33	15'-10"	D	25	30	31	33	15'-0"	D	25	29	31	32	14'-3"	D	25	29	31	32	13'-8"	D	25	29	30	32	13'-0"	E	26	28	30	31
12 G Steel C	L18	35'-7"	E	26	36	38	40	32'-7"	E	26	36	38	39	30'-2"	E	27	35	37	39	28'-2"	E	27	34	36	38	26'-6"	E	28	34	36	37	25'-0"	E	28	33	35	37	23'-9"	F	28	33	35	36	22'-7"	F	29	32	34	36	21'-7"	F	29	32	34	36	20'-8"	G	29	32	34	35	19'-11"	G	29	31	33	35
Double 16 G Steel C	L18/L8	34'-7"	D	26	36	38	40	32'-0"	E	26	35	37	39	30'-0"	E	27	35	37	39	28'-3"	E	27	34	36	38	26'-9"	E	28	34	36	37	25'-6"	F	28	33	35	37	24'-5"	F	29	33	35	37	23'-5"	F	29	33	35	36	22'-6"	G	29	32	34	36	21'-9"	G	30	32	34	36	21'-0"	G	30	32	34	35
Double 14 G Steel C	L18/L8	39'-8"	E	27	37	40	41	36'-10"	E	27	37	39	41	34'-6"	E	28	36	38	40	32'-6"	F	29	36	38	39	30'-10"	G	29	35	37	39	29'-5"	G	30	35	37	38	28'-2"	G	30	34	36	38	27'-1"	G	30	34	36	38	26'-1"	G	31	34	36	37	25'-2"	G	31	33	35	37	24'-4"	H1	32	33	35	37
Double 12 G Steel C	L18/L8	40'-0"	E	27	37	40	41	40'-0"	F	28	37	40	41	40'-0"	G	30	37	40	41	40'-0"	G	31	37	40	41	40'-0"	H1	32	37	40	41	38'-11"	H1	33	37	39	41	37'-3"	H1	33	37	39	41	35'-10"	H1	33	36	39	40	34'-6"	H1	34	36	38	40	33'-4"	H1	34	36	38	40	32'-4"	H1	35	35	38	39

Header	Detail	trib 9'	Min Post Type	Uplift Footing (in)	8'	10'	12'	trib 10'	Min Post Type	Uplift Footing (in)	8'	10'	12'	trib 11'	Min Post Type	Uplift Footing (in)	8'	10'	12'	trib 12'	Min Post Type	Uplift Footing (in)	8'	10'	12'	trib 13'	Min Post Type	Uplift Footing (in)	8'	10'	12'	trib 14'	Min Post Type	Uplift Footing (in)	8'	10'	12'	trib 15'	Min Post Type	Uplift Footing (in)	8'	10'	12'	trib 16'	Min Post Type	Uplift Footing (in)	8'	10'	12'	trib 17'	Min Post Type	Uplift Footing (in)	8'	10'	12'	trib 18'	Min Post Type	Uplift Footing (in)	8'	10'	12'
On Slab	On Slab	n/a	A1					n/a	A1					n/a	A1					n/a	A1					n/a	A1					n/a	A1					n/a	A1					n/a	A1					n/a	A1					n/a	A1				
0.042"x3"x8"	L1	6'-1"	A2	21	24	26	27	5'-8"	A2	21	25	26	28	5'-4"	A2	21	26	27	28	5'-0"	A2	21	26	28	29	4'-8"	A2	21	27	28	30	4'-5"	A2	22	27	29	30	4'-2"	A2	22	28	29	31	4'-0"	A2	22	28	30	31	3'-9"	A2	22	29	30	32	3'-7"	A3	22	29	31	32
Double 3"x8"	L1/L12	9'-7"	C	24	26	28	29	9'-0"	D	24	26	27	28	8'-6"	D	25	26	27	28	8'-1"	D	25	26	28	29	7'-8"	D	25	27	28	30	7'-3"	D	25	27	29	30	7'-0"	E	26	28	29	31	6'-8"	E	26	28	30	31	6'-5"	E	26	29	30	32	6'-2"	E	26	29	31	32
Double 2"x6.625"	L2/L12	8'-8"	B	23	24	26	27	8'-2"	C	24	25	26	28	7'-9"	C	24	26	27	28	7'-4"	C	24	26	28	29	7'-0"	D	25	27	28	30	6'-9"	D	25	27	29	30	6'-5"	D	25	28	29	31	6'-2"	D	25	28	30	31	5'-11"	D	25	29	30	32	5'-9"	D	26	29	31	32
16 G Steel C	L18	9'-9"	C	24	26	28	29	8'-10"	C	24	26	27	28	8'-0"	C	24	26	27	28	7'-4"	C	24	26	28	29	6'-10"	C	24	27	28	30	6'-4"	C	24	27	29	30	5'-11"	C	24	28	29	31	5'-6"	C	24	28	30	31	5'-2"	C	24	29	30	32	4'-11"	C	24	29	31	32
14 G Steel C	L18	12'-0"	E	26	28	29	31	11'-2"	E	26	27	29	30	10'-5"	E	26	27	28	30	9'-9"	E	27	26	28	29	9'-2"	E	27	27	28	30	8'-7"	E	27	27	29	30	8'-0"	E	27	28	29	31	7'-6"	E	27	28	30	31	7'-1"	E	27	29	30	32	6'-8"	E	27	29	31	32
12 G Steel C	L18	18'-5"	G	30	31	33	34	17'-3"	G	30	30	32	34	16'-3"	G	31	30	32	33	15'-4"	G	31	29	31	33	14'-7"	G	31	29	31	32	13'-10"	H1	32	29	30	32	13'-3"	H1	32	28	30	31	12'-8"	H1	32	28	30	31	12'-2"	H1	32	29	30	32	11'-8"	H1	32	29	31	32
Double 16 G Steel C	L18/L8	19'-9"	G	31	31	33	35	18'-8"	G	31	31	33	34	17'-9"	H1	32	30	32	34	16'-11"	H1	32	30	32	33	16'-2"	H1	32	30	32	33	15'-6"	H1	33	29	31	33	14'-11"	H1	33	29	31	32	14'-5"	H1	33	29	31	32	13'-11"	H1	34	29	30	32	13'-6"	H1	34	29	31	32
Double 14 G Steel C	L18/L8	22'-11"	H1	32	33	34	36	21'-9"	H1	33	32	34	36	20'-8"	H1	33	32	34	35	19'-9"	H1	34	31	33	35	19'-0"	H1	34	31	33	34	18'-3"	H1	35	31	32	34	17'-7"	H1	35	30	32	34	17'-0"	H2	35	30	32	33	16'-6"	H2	36	30	32	33	16'-0"	H2	36	30	31	33
Double 12 G Steel C	L18/L8	30'-6"	H2	35	35	37	39	28'-11"	H2	36	35	37	38	27'-7"	H2	37	34	36	38	26'-5"	H2	37	34	36	37	25'-5"	H3	38	33	35	37	24'-6"	H3	38	33	35	37	23'-8"	H3	39	33	35	36	22'-11"	H3	39	33	34	36	22'-2"	H3	39	32	34	36	21'-7"	H4	40	32	34	36

Ground Snow Load: 15 psf **Live Load: 10 psf** **Wind Speed: 110 MPH EXPOSURE B** **Seismic Ss= 100%** **Seismic Design Category D** **Freestanding Structures**

Table 2.10c (cubic footing "d"; Constrained Footing (in) by Max Post Length)

Header	Detail	trib 3'	Min Post Type	Uplift Footing (in)	8'	10'	12'	trib 3.5'	Min Post Type	Uplift Footing (in)	8'	10'	12'	trib 4'	Min Post Type	Uplift Footing (in)	8'	10'	12'	trib 4.5'	Min Post Type	Uplift Footing (in)	8'	10'	12'	trib 5'	Min Post Type	Uplift Footing (in)	8'	10'	12'	trib 5.5'	Min Post Type	Uplift Footing (in)	8'	10'	12'	trib 6'	Min Post Type	Uplift Footing (in)	8'	10'	12'	trib 6.5'	Min Post Type	Uplift Footing (in)	8'	10'	12'	trib 7'	Min Post Type	Uplift Footing (in)	8'	10'	12'	trib 7.5'	Min Post Type	Uplift Footing (in)	8'	10'	12'	trib 8'	Min Post Type	Uplift Footing (in)	8'	10'	12'
On Slab	On Slab	n/a	A1					n/a	A1					n/a	A1					n/a	A1					n/a	A1					n/a	A1					n/a	A1					n/a	A1					n/a	A1					n/a	A1					n/a	A1				
0.042"x3"x8"	L1	12'-0"	A1	15	24	26	27	11'-0"	A1	16	24	25	26	10'-2"	A1	16	23	25	26	9'-6"	A1	16	23	24	25	8'-11"	A1	16	23	24	25	8'-5"	A1	17	22	24	25	8'-0"	A1	17	22	23	24	7'-7"	A1	17	22	23	24	7'-3"	A1	17	21	23	24	6'-11"	A1	17	21	22	24	6'-8"	A1	17	21	22	23
Double 3"x8"	L1/L12	17'-8"	A1	17	27	28	30	16'-3"	A2	18	26	28	29	15'-2"	A2	18	26	27	29	14'-3"	A2	19	25	27	28	13'-5"	A3	19	25	27	28	12'-9"	A3	19	25	26	27	12'-2"	A3	19	24	26	27	11'-7"	A3	20	24	26	27	11'-2"	B	20	24	25	27	10'-8"	C	20	24	25	26	10'-4"	C	20	23	25	26
Double 2"x6.625"	L2/L12	15'-8"	A1	17	25	26	28	14'-6"	A1	17	24	26	27	13'-6"	A1	18	24	25	27	12'-8"	A2	18	24	25	26	12'-0"	A2	18	23	25	26	11'-5"	A2	18	23	24	25	10'-11"	A3	19	23	24	25	10'-5"	A3	19	22	24	25	10'-0"	A3	19	22	23	25	9'-8"	A3	19	22	23	24	9'-4"	A3	19	22	23	24
16 G Steel C	L18	20'-7"	A2	18	28	30	31	18'-8"	A3	19	27	29	30	17'-1"	A3	19	27	28	30	15'-10"	A3	19	26	28	29	14'-9"	A3	19	26	27	28	13'-10"	A3	20	25	27	28	13'-0"	B	20	25	26	28	12'-4"	C	20	25	26	27	11'-8"	C	20	24	26	27	11'-1"	C	20	24	25	27	10'-7"	C	20	24	25	26
14 G Steel C	L18	24'-8"	A3	19	29	31	32	22'-5"	B	20	29	30	32	20'-7"	C	20	28	30	31	19'-2"	C	20	27	29	30	17'-10"	C	21	27	29	30	16'-10"	D	21	27	28	29	15'-10"	D	21	26	28	29	15'-0"	D	21	26	27	29	14'-3"	D	22	25	27	28	13'-8"	D	22	25	27	28	13'-0"	E	22	25	26	28
12 G Steel C	L18	35'-7"	E	22	32	34	36	32'-7"	E	22	31	33	35	30'-2"	E	23	31	33	34	28'-2"	E	23	30	32	34	26'-6"	E	24	30	32	33	25'-0"	E	24	29	31	33	23'-9"	F	24	29	31	32	22'-7"	F	24	29	30	32	21'-7"	F	25	28	30	31	20'-8"	G	25	28	30	31	19'-11"	G	25	28	29	31
Double 16 G Steel C	L18/L8	34'-7"	D	22	32	34	35	32'-0"	E	22	31	33	35	30'-0"	E	23	31	33	34	28'-3"	E	23	30	32	34	26'-9"	E	24	30	32	33	25'-6"	F	24	30	31	33	24'-5"	F	24	29	31	32	23'-5"	F	25	29	31	32	22'-6"	G	25	29	30	32	21'-9"	G	25	28	30	31	21'-0"	G	26	28	30	31
Double 14 G Steel C	L18/L8	39'-8"	E	23	33	35	37	36'-10"	E	23	32	34	36	34'-6"	E	24	32	34	35	32'-6"	F	24	31	33	35	30'-10"	G	25	31	33	34	29'-5"	G	25	31	32	34	28'-2"	G	26	30	32	34	27'-1"	G	26	30	32	33	26'-1"	G	26	30	31	33	25'-2"	G	27	29	31	33	24'-4"	H1	27	29	31	32
Double 12 G Steel C	L18/L8	40'-0"	E	23	33	35	37	40'-0"	F	24	33	35	37	40'-0"	G	25	33	35	37	40'-0"	G	26	33	35	37	40'-0"	H1	27	33	35	37	38'-11"	H1	28	33	35	36	37'-3"	H1	28	33	34	36	35'-10"	H1	28	32	34	36	34'-6"	H1	29	32	34	35	33'-4"	H1	29	32	33	35	32'-4"	H1	29	31	33	35

Header	Detail	trib 9'	Min Post Type	Uplift Footing (in)	8'	10'	12'	trib 10'	Min Post Type	Uplift Footing (in)	8'	10'	12'	trib 11'	Min Post Type	Uplift Footing (in)	8'	10'	12'	trib 12'	Min Post Type	Uplift Footing (in)	8'	10'	12'	trib 13'	Min Post Type	Uplift Footing (in)	8'	10'	12'	trib 14'	Min Post Type	Uplift Footing (in)	8'	10'	12'	trib 15'	Min Post Type	Uplift Footing (in)	8'	10'	12'	trib 16'	Min Post Type	Uplift Footing (in)	8'	10'	12'	trib 17'	Min Post Type	Uplift Footing (in)	8'	10'	12'	trib 18'	Min Post Type	Uplift Footing (in)	8'	10'	12'
On Slab	On Slab	n/a	A1					n/a	A1					n/a	A1					n/a	A1					n/a	A1					n/a	A1					n/a	A1					n/a	A1					n/a	A1					n/a	A1				
0.042"x3"x8"	L1	6'-1"	A1	18	21	23	24	5'-8"	A1	18	22	23	24	5'-4"	A1	18	23	24	25	5'-0"	A1	18	23	24	26	4'-8"	A1	18	24	25	26	4'-5"	A1	18	24	25	27	4'-2"	A1	18	24	26	27	4'-0"	A1	19	25	26	28	3'-9"	A1	19	25	27	28	3'-7"	A1	19	26	27	28
Double 3"x8"	L1/L12	9'-7"	A1	20	23	24	26	9'-0"	A1	21	23	24	25	8'-6"	A1	21	23	24	25	8'-1"	A1	21	23	24	26	7'-8"	A1	21	24	25	26	7'-3"	A1	22	24	25	27	7'-0"	A1	22	24	26	27	6'-8"	A1	22	25	26	28	6'-5"	A1	22	25	27	28	6'-2"	A1	22	26	27	28
Double 2"x6.625"	L2/L12	8'-8"	A1	20	21	23	24	8'-2"	A1	20	22	23	24	7'-9"	A1	20	23	24	25	7'-4"	A1	21	23	24	26	7'-0"	A1	21	24	25	26	6'-9"	A1	21	24	25	27	6'-5"	A1	21	24	26	27	6'-2"	A1	21	25	26	28	5'-11"	A1	22	25	27	28	5'-9"	A1	22	26	27	28
16 G Steel C	L18	9'-9"	A1	21	23	24	26	8'-10"	A1	21	23	24	25	8'-0"	A1	21	23	24	25	7'-4"	A1	21	23	24	26	6'-10"	A1	21	24	25	26	6'-4"	A1	21	24	25	27	5'-11"	A1	21	24	26	27	5'-6"	A1	21	25	26	28	5'-2"	A1	21	25	27	28	4'-11"	A1	21	26	27	28
14 G Steel C	L18	12'-0"	A1	22	24	26	27	11'-2"	A1	22	24	25	27	10'-5"	A1	22	24	25	26	9'-9"	A1	23	23	24	26	9'-2"	A1	23	24	25	26	8'-7"	A1	23	24	25	27	8'-0"	A1	23	24	26	27	7'-6"	A1	23	25	26	28	7'-1"	A1	23	25	27	28	6'-8"	A1	23	26	27	28
12 G Steel C	L18	18'-5"	A2	25	27	29	30	17'-3"	A2	26	27	28	30	16'-3"	A2	26	26	28	29	15'-4"	A3	26	26	27	29	14'-7"	A3	27	26	27	28	13'-10"	A3	27	25	27	28	13'-3"	C	27	25	26	28	12'-8"	C	27	25	26	28	12'-2"	C	27	25	27	28	11'-8"	C	28	26	27	28
Double 16 G Steel C	L18/L8	19'-9"	A2	26	28	29	31	18'-8"	A3	26	27	29	30	17'-9"	A3	27	27	28	30	16'-11"	A3	27	27	28	29	16'-2"	C	28	26	28	29	15'-6"	C	28	26	28	29	14'-11"	D	28	26	27	29	14'-5"	D	28	26	27	28	13'-11"	D	29	25	27	28	13'-6"	D	29	26	27	28
Double 14 G Steel C	L18/L8	22'-11"	A3	27	29	30	32	21'-9"	A3	28	28	30	31	20'-8"	C	28	28	30	31	19'-9"	C	29	28	29	31	19'-0"	D	29	27	29	30	18'-3"	D	29	27	29	30	17'-7"	E	30	27	28	30	17'-0"	E	30	27	28	30	16'-6"	E	30	26	28	29	16'-0"	E	31	26	28	29
Double 12 G Steel C	L18/L8	30'-6"	D	30	31	33	34	28'-11"	D	31	30	32	34	27'-7"	E	31	30	32	33	26'-5"	E	32	30	32	33	25'-5"	E	32	29	31	33	24'-6"	E	32	29	31	32	23'-8"	F	33	29	31	32	22'-11"	F	33	29	30	32	22'-2"	G	33	28	30	32	21'-7"	G	34	28	30	31

Registered Professional Engineer (Civil)
CERTIFICATE NO. 39702
CARL PUTNAM
Date Signed
ARIZONA U.S.A.
Expires 09/30/2024

SECTION 2.0 POST SPACING, POST TYPE AND FOOTING SIZE FOR LATTICE COVERS

Roof Solidity: 60%

Ground Snow Load: 20 psf — Live Load: 20 psf — Wind Speed: 95 MPH EXPOSURE B — Seismic Ss= 150% — Seismic Design Category D — Structures are Attached to Existing Building

Table 2.11a

cubic footing "d": Constrained Footing (in), Max Post Length 8', 12', 15'

Header	Detail	trib 3'	Min Post Type	Uplift Footing (in)	8'	12'	15'	trib 3.5'	Min Post Type	Uplift Footing (in)	8'	12'	15'	trib 4'	Min Post Type	Uplift Footing (in)	8'	12'	15'	trib 4.5'	Min Post Type	Uplift Footing (in)	8'	12'	15'
On Slab	On Slab	11'-10"	A1					10'-2"	A1					8'-11"	A1					7'-11"	A1				
0.042"x3"x8"	L1	10'-5"	A1	15	16	18	19	9'-6"	A1	15	16	18	19	8'-8"	A1	16	17	19	20	8'-1"	A1	16	18	19	21
Double 3"x8"	L1/L12	15'-5"	A2	17	18	20	21	14'-3"	A3	18	18	20	21	13'-1"	A3	18	18	20	22	12'-4"	A3	18	19	21	22
Double 2"x6.625"	L2/L12	13'-9"	A1	17	17	19	20	12'-8"	A2	17	18	20	21	11'-9"	A2	17	18	20	21	11'-0"	A3	18	18	20	21
16 G Steel C	L18	17'-6"	A3	18	18	20	22	15'-10"	A3	18	19	21	22	14'-3"	A3	18	19	21	22	13'-2"	B	19	19	21	22
14 G Steel C	L18	21'-0"	C	19	19	21	23	19'-2"	C	19	20	22	23	17'-4"	D	20	20	22	23	16'-1"	D	20	20	22	23
12 G Steel C	L18	26'-4"	D	21	20	23	24	25'-1"	E	21	21	23	25	24'-0"	E	22	21	24	25	23'-1"	E	23	22	24	26
Double 16 G Steel C	L18/L8	25'-5"	D	20	20	22	24	24'-2"	E	21	21	23	24	23'-2"	E	22	21	24	25	22'-4"	E	22	22	24	25
Double 14 G Steel C	L18/L8	27'-9"	E	21	21	23	24	26'-5"	E	22	21	24	25	25'-3"	E	22	22	24	25	24'-4"	F	23	22	25	26
Double 12 G Steel C	L18/L8	33'-3"	E	22	22	24	25	31'-7"	F	23	22	25	26	30'-3"	G	24	23	25	27	29'-2"	G	24	23	26	27

Header	Detail	trib 5'	Min Post Type	Uplift Footing (in)	8'	12'	15'	trib 5.5'	Min Post Type	Uplift Footing (in)	8'	12'	15'	trib 6'	Min Post Type	Uplift Footing (in)	8'	12'	15'	trib 6.5'	Min Post Type	Uplift Footing (in)	8'	12'	15'
On Slab	On Slab	7'-1"	A1					6'-5"	A1					5'-11"	A1					5'-5"	A1				
0.042"x3"x8"	L1	7'-7"	A1	16	18	20	21	7'-2"	A1	16	18	21	22	6'-8"	A1	16	19	21	22	6'-4"	A1	17	19	21	23
Double 3"x8"	L1/L12	11'-7"	A3	19	19	21	22	11'-0"	C	19	19	21	22	10'-5"	C	19	19	21	23	9'-11"	C	19	19	21	23
Double 2"x6.625"	L2/L12	10'-5"	A3	18	18	20	22	9'-11"	A3	18	19	21	22	9'-5"	A3	18	19	21	22	9'-0"	A3	19	19	21	23
16 G Steel C	L18	12'-4"	C	19	19	21	22	11'-6"	C	19	19	21	23	10'-9"	C	19	19	21	23	10'-2"	C	19	19	22	23
14 G Steel C	L18	15'-0"	D	20	20	22	24	14'-1"	D	20	20	22	24	13'-2"	E	21	20	23	24	12'-6"	E	21	21	23	24
12 G Steel C	L18	22'-4"	F	23	22	25	26	21'-4"	G	23	23	25	26	20'-1"	G	24	23	25	27	19'-2"	G	24	23	25	27
Double 16 G Steel C	L18/L8	21'-7"	F	23	22	24	26	20'-11"	F	23	22	25	26	20'-4"	G	24	23	25	27	19'-9"	G	24	23	26	27
Double 14 G Steel C	L18/L8	23'-6"	G	23	23	25	26	22'-9"	G	24	23	25	27	22'-2"	G	24	23	26	27	21'-7"	G	25	24	26	28
Double 12 G Steel C	L18/L8	28'-2"	G	25	24	26	28	27'-3"	H1	25	24	27	28	26'-6"	H1	26	24	27	29	25'-10"	H1	26	25	27	29

Header	Detail	trib 7'	Min Post Type	Uplift Footing (in)	8'	12'	15'	trib 7.5'	Min Post Type	Uplift Footing (in)	8'	12'	15'	trib 8'	Min Post Type	Uplift Footing (in)	8'	12'	15'
On Slab	On Slab	5'-1"	A1					4'-9"	A1					4'-5"	A1				
0.042"x3"x8"	L1	6'-1"	A2	17	20	22	23	5'-9"	A2	17	20	22	24	5'-6"	A2	17	20	23	24
Double 3"x8"	L1/L12	9'-6"	C	19	20	22	23	9'-2"	D	20	20	22	24	8'-9"	D	20	20	23	24
Double 2"x6.625"	L2/L12	8'-8"	C	19	20	22	23	8'-4"	C	19	20	22	24	8'-0"	C	19	20	23	24
16 G Steel C	L18	9'-8"	C	20	20	22	23	9'-1"	C	20	20	22	24	8'-5"	C	20	20	23	24
14 G Steel C	L18	11'-11"	E	21	21	23	24	11'-4"	E	21	21	23	24	10'-9"	E	21	21	23	24
12 G Steel C	L18	18'-4"	G	24	23	26	27	17'-6"	G	24	23	26	27	16'-9"	G	25	23	26	27
Double 16 G Steel C	L18/L8	19'-4"	G	25	23	26	27	18'-10"	G	25	24	26	28	18'-2"	G	25	24	26	28
Double 14 G Steel C	L18/L8	21'-1"	H1	25	24	26	28	20'-7"	H1	26	24	27	28	20'-2"	H1	26	24	27	29
Double 12 G Steel C	L18/L8	25'-2"	H1	27	25	28	29	24'-8"	H1	27	25	28	30	24'-1"	H1	28	26	28	30

Footing (in), Max Post Length 8', 12', 15'

Header	Detail	trib 8.5'	Min Post Type	Uplift Footing (in)	8'	12'	15'	trib 9'	Min Post Type	Uplift Footing (in)	8'	12'	15'	trib 10'	Min Post Type	Uplift Footing (in)	8'	12'	15'	trib 10.5'	Min Post Type	Uplift Footing (in)	8'	12'	15'
On Slab	On Slab	4'-2"	A1					3'-11"	A1					3'-6"	A1					3'-4"	A1				
0.042"x3"x8"	L1	5'-3"	A2	17	21	23	24	5'-1"	A2	17	21	23	25	4'-8"	A2	17	22	24	25	4'-6"	A2	17	22	24	26
Double 3"x8"	L1/L12	8'-5"	D	20	21	23	24	8'-2"	D	20	21	23	25	7'-7"	D	20	22	24	25	7'-4"	D	20	22	24	26
Double 2"x6.625"	L2/L12	7'-8"	C	19	21	23	24	7'-5"	C	20	21	23	25	7'-0"	D	20	22	24	25	6'-9"	D	20	22	24	26
16 G Steel C	L18	7'-11"	C	20	21	23	24	7'-6"	C	20	21	23	25	6'-9"	C	20	22	24	25	6'-5"	C	20	22	24	26
14 G Steel C	L18	10'-4"	E	21	21	23	25	9'-11"	E	21	21	23	25	9'-1"	E	22	22	24	25	8'-8"	E	22	22	24	26
12 G Steel C	L18	16'-1"	G	25	23	26	28	15'-7"	G	25	24	26	28	14'-5"	G	25	24	26	28	14'-0"	H1	25	24	26	28
Double 16 G Steel C	L18/L8	17'-7"	H1	25	24	27	28	17'-1"	H1	26	24	27	28	16'-1"	H1	26	24	27	29	15'-8"	H1	26	25	27	29
Double 14 G Steel C	L18/L8	19'-9"	H1	26	25	27	29	19'-5"	H1	27	25	28	29	18'-9"	H1	27	25	28	30	18'-5"	H1	28	26	28	30
Double 12 G Steel C	L18/L8	23'-8"	H1	28	26	29	30	23'-2"	H2	28	26	29	31	22'-5"	H2	29	27	29	31	22'-0"	H2	29	27	30	31

Header	Detail	trib 11'	Min Post Type	Uplift Footing (in)	8'	12'	15'	trib 11.5'	Min Post Type	Uplift Footing (in)	8'	12'	15'	trib 12'	Min Post Type	Uplift Footing (in)	8'	12'	15'	trib 13'	Min Post Type	Uplift Footing (in)	8'	12'	15'
On Slab	On Slab	3'-2"	A1					3'-1"	A1					2'-11"	A1					2'-8"	A1				
0.042"x3"x8"	L1	4'-4"	A2	17	22	24	26	4'-2"	A2	17	22	25	26	4'-0"	A2	18	23	25	27	3'-9"	A3	18	23	26	27
Double 3"x8"	L1/L12	7'-2"	D	21	22	24	26	7'-0"	E	21	22	25	26	6'-9"	E	21	23	25	27	6'-5"	E	21	23	26	27
Double 2"x6.625"	L2/L12	6'-7"	D	20	22	24	26	6'-5"	D	20	22	25	26	6'-3"	D	20	23	25	27	5'-11"	D	20	23	26	27
16 G Steel C	L18	6'-2"	C	20	22	24	26	5'-11"	C	20	22	25	26	5'-7"	C	20	23	25	27	5'-2"	C	20	23	26	27
14 G Steel C	L18	8'-4"	E	22	22	24	26	8'-0"	E	22	22	25	26	7'-7"	E	22	23	25	27	7'-1"	E	22	23	26	27
12 G Steel C	L18	13'-7"	H1	25	24	27	28	13'-3"	H1	26	24	27	28	12'-9"	H1	26	24	27	28	12'-2"	H1	26	24	27	29
Double 16 G Steel C	L18/L8	15'-4"	H1	26	25	27	29	14'-11"	H1	27	25	28	29	14'-6"	H1	27	25	28	29	13'-11"	H1	27	25	28	30
Double 14 G Steel C	L18/L8	18'-0"	H1	28	26	29	30	17'-7"	H1	28	26	29	30	17'-2"	H2	28	26	29	31	16'-6"	H2	29	26	29	31
Double 12 G Steel C	L18/L8	21'-8"	H2	30	27	30	32	21'-5"	H2	30	27	30	32	21'-1"	H3	30	27	30	32	20'-6"	H3	31	28	31	33

Header	Detail	trib 14'	Min Post Type	Uplift Footing (in)	8'	12'	15'	trib 15'	Min Post Type	Uplift Footing (in)	8'	12'	15'
On Slab	On Slab	2'-6"	A1					2'-4"	A1				
0.042"x3"x8"	L1	3'-7"	A3	18	23	26	28	3'-4"	A3	18	24	27	28
Double 3"x8"	L1/L12	6'-1"	E	21	23	26	28	5'-9"	E	21	24	27	28
Double 2"x6.625"	L2/L12	5'-8"	E	21	23	26	28	5'-5"	E	21	24	27	28
16 G Steel C	L18	4'-10"	C	20	23	26	28	4'-6"	C	20	24	27	28
14 G Steel C	L18	6'-6"	E	22	23	26	28	6'-1"	E	22	24	27	28
12 G Steel C	L18	11'-6"	H1	26	24	27	29	11'-0"	H1	26	25	27	29
Double 16 G Steel C	L18/L8	13'-4"	H1	27	25	28	30	12'-10"	H1	28	26	28	30
Double 14 G Steel C	L18/L8	15'-10"	H2	29	26	29	31	15'-3"	H2	29	27	30	31
Double 12 G Steel C	L18/L8	20'-0"	H3	31	28	31	33	19'-7"	H4	32	28	32	33

Amerimax Exterior Home Products
28921 US Hwy 74
Romoland, CA 92585

Carl Putnam, P. E.
3441 Ivylink Place
Lynchburg, VA 24503
carlputnam@comcast.net

Ground Snow Load: 20 psf — Live Load: 20 psf — Wind Speed: 95 MPH EXPOSURE B — Seismic Ss= 150% — Seismic Design Category D — Freestanding Structures

Table 2.11b

cubic footing "d": Constrained Footing (in), Max Post Length 8', 12', 15'

Header	Detail	trib 3'	Min Post Type	Uplift Footing (in)	8'	12'	15'	trib 3.5'	Min Post Type	Uplift Footing (in)	8'	12'	15'	trib 4'	Min Post Type	Uplift Footing (in)	8'	12'	15'	trib 4.5'	Min Post Type	Uplift Footing (in)	8'	12'	15'
On Slab	On Slab	n/a	A1					n/a	A1					n/a	A1					n/a	A1				
0.042"x3"x8"	L1	10'-5"	A1	15	22	24	26	9'-6"	A1	15	21	24	25	8'-8"	A1	15	21	23	24	8'-1"	A1	15	20	23	24
Double 3"x8"	L1/L12	15'-5"	A2	17	24	27	28	14'-3"	A3	17	24	26	28	13'-1"	A3	17	23	26	27	12'-4"	A3	18	23	25	27
Double 2"x6.625"	L2/L12	13'-9"	A1	16	22	25	26	12'-8"	A2	16	22	24	26	11'-9"	A2	17	21	24	25	11'-0"	A3	17	21	23	25
16 G Steel C	L18	17'-6"	A3	17	25	28	29	15'-10"	A3	18	24	27	28	14'-3"	A3	18	24	26	28	13'-2"	B	18	23	26	27
14 G Steel C	L18	21'-0"	C	18	26	29	31	19'-2"	C	19	25	28	30	17'-4"	D	19	25	28	29	16'-1"	D	19	24	27	29
12 G Steel C	L18	26'-4"	D	20	28	31	32	25'-1"	E	21	27	30	32	24'-0"	E	21	27	30	32	23'-1"	E	22	27	30	31
Double 16 G Steel C	L18/L8	25'-5"	D	20	27	30	32	24'-2"	E	20	27	30	32	23'-2"	E	21	27	30	31	22'-4"	E	22	26	29	31
Double 14 G Steel C	L18/L8	27'-9"	E	20	28	31	33	26'-5"	E	21	28	31	32	25'-3"	E	22	27	30	32	24'-4"	F	22	27	30	32
Double 12 G Steel C	L18/L8	33'-3"	E	21	29	32	34	31'-7"	F	22	29	32	34	30'-3"	G	23	29	32	34	29'-2"	G	24	28	31	33

Header	Detail	trib 5'	Min Post Type	Uplift Footing (in)	8'	12'	15'	trib 5.5'	Min Post Type	Uplift Footing (in)	8'	12'	15'	trib 6'	Min Post Type	Uplift Footing (in)	8'	12'	15'	trib 6.5'	Min Post Type	Uplift Footing (in)	8'	12'	15'
On Slab	On Slab	n/a	A1					n/a	A1					n/a	A1					n/a	A1				
0.042"x3"x8"	L1	7'-7"	A1	16	20	22	24	7'-2"	A1	16	20	22	23	6'-8"	A1	16	19	22	23	6'-4"	A1	16	19	21	23
Double 3"x8"	L1/L12	11'-7"	A3	18	22	25	26	11'-0"	C	18	22	25	26	10'-5"	C	18	22	24	26	9'-11"	C	19	22	24	25
Double 2"x6.625"	L2/L12	10'-5"	A3	17	21	23	24	9'-11"	A3	18	21	23	24	9'-5"	A3	18	20	22	24	9'-0"	A3	18	20	22	24
16 G Steel C	L18	12'-4"	C	18	23	25	27	11'-6"	C	18	22	25	26	10'-9"	C	19	22	24	26	10'-2"	C	19	22	24	25
14 G Steel C	L18	15'-0"	D	20	24	27	28	14'-1"	D	20	24	26	28	13'-2"	E	20	23	26	27	12'-6"	E	20	23	25	27
12 G Steel C	L18	22'-4"	F	22	26	29	31	21'-4"	G	23	26	29	31	20'-1"	G	23	26	29	30	19'-2"	G	23	25	28	30
Double 16 G Steel C	L18/L8	21'-7"	F	22	26	29	31	20'-11"	F	23	26	29	31	20'-4"	G	23	26	29	30	19'-9"	G	23	26	28	30
Double 14 G Steel C	L18/L8	23'-6"	G	23	27	30	31	22'-9"	G	23	27	30	31	22'-2"	G	24	26	29	31	21'-7"	G	24	26	29	31
Double 12 G Steel C	L18/L8	28'-2"	G	24	28	31	33	27'-3"	H1	25	28	31	33	26'-6"	H1	25	28	31	32	25'-10"	H1	26	27	30	32

Header	Detail	trib 7'	Min Post Type	Uplift Footing (in)	8'	12'	15'	trib 7.5'	Min Post Type	Uplift Footing (in)	8'	12'	15'	trib 8'	Min Post Type	Uplift Footing (in)	8'	12'	15'
On Slab	On Slab	n/a	A1					n/a	A1					n/a	A1				
0.042"x3"x8"	L1	6'-1"	A2	16	19	21	22	5'-9"	A2	16	19	21	22	5'-6"	A2	16	19	21	23
Double 3"x8"	L1/L12	9'-6"	C	19	21	24	25	9'-2"	D	19	21	23	25	8'-9"	D	19	21	23	25
Double 2"x6.625"	L2/L12	8'-8"	C	18	20	22	23	8'-4"	C	18	20	22	23	8'-0"	C	19	19	22	23
16 G Steel C	L18	9'-8"	C	19	21	24	25	9'-1"	C	19	21	23	25	8'-5"	C	19	21	23	24
14 G Steel C	L18	11'-11"	E	20	23	25	26	11'-4"	E	20	22	25	26	10'-9"	E	20	22	24	26
12 G Steel C	L18	18'-4"	G	23	25	28	30	17'-6"	G	24	25	28	29	16'-9"	G	24	25	27	29
Double 16 G Steel C	L18/L8	19'-4"	G	24	26	28	30	18'-10"	G	24	25	28	30	18'-2"	G	24	25	28	29
Double 14 G Steel C	L18/L8	21'-1"	H1	24	26	29	31	20'-7"	H1	25	26	29	30	20'-2"	H1	25	26	29	30
Double 12 G Steel C	L18/L8	25'-2"	H1	26	27	30	32	24'-8"	H1	26	27	30	32	24'-1"	H1	27	27	30	32

cubic footing "d": Constrained Footing (in), Max Post Length 8', 12', 15'

Header	Detail	trib 8.5'	Min Post Type	Uplift Footing (in)	8'	12'	15'	trib 9'	Min Post Type	Uplift Footing (in)	8'	12'	15'	trib 10'	Min Post Type	Uplift Footing (in)	8'	12'	15'	trib 10.5'	Min Post Type	Uplift Footing (in)	8'	12'	15'
On Slab	On Slab	n/a	A1					n/a	A1					n/a	A1					n/a	A1				
0.042"x3"x8"	L1	5'-3"	A2	16	20	22	23	5'-1"	A2	17	20	22	23	4'-8"	A2	17	20	23	24	4'-6"	A2	17	21	23	24
Double 3"x8"	L1/L12	8'-5"	D	19	21	23	24	8'-2"	D	19	20	23	24	7'-7"	D	20	20	23	24	7'-4"	D	20	21	23	24
Double 2"x6.625"	L2/L12	7'-8"	C	19	20	22	23	7'-5"	C	19	20	22	23	7'-0"	D	19	20	23	24	6'-9"	D	19	21	23	24
16 G Steel C	L18	7'-11"	C	19	20	23	24	7'-6"	C	19	20	22	24	6'-9"	C	19	20	23	24	6'-5"	C	19	21	23	24
14 G Steel C	L18	10'-4"	E	21	22	24	26	9'-11"	E	21	22	24	25	9'-1"	E	21	21	23	25	8'-8"	E	21	21	23	25
12 G Steel C	L18	16'-1"	G	24	24	27	29	15'-7"	G	24	24	27	28	14'-5"	G	24	24	26	28	14'-0"	H1	24	24	26	28
Double 16 G Steel C	L18/L8	17'-7"	H1	25	25	28	29	17'-1"	H1	25	25	27	29	16'-1"	H1	25	24	27	29	15'-8"	H1	25	25	27	29
Double 14 G Steel C	L18/L8	19'-9"	H1	26	26	28	30	19'-5"	H1	26	26	28	30	18'-9"	H1	26	25	28	30	18'-5"	H1	27	26	28	30
Double 12 G Steel C	L18/L8	23'-8"	H1	27	27	30	32	23'-2"	H2	27	27	30	31	22'-5"	H2	28	27	29	31	22'-0"	H2	28	27	30	31

Header	Detail	trib 11'	Min Post Type	Uplift Footing (in)	8'	12'	15'	trib 11.5'	Min Post Type	Uplift Footing (in)	8'	12'	15'	trib 12'	Min Post Type	Uplift Footing (in)	8'	12'	15'	trib 13'	Min Post Type	Uplift Footing (in)	8'	12'	15'
On Slab	On Slab	n/a	A1					n/a	A1					n/a	A1					n/a	A1				
0.042"x3"x8"	L1	4'-4"	A2	17	21	23	25	4'-2"	A2	17	21	24	25	4'-0"	A2	17	21	24	25	3'-9"	A3	17	22	24	26
Double 3"x8"	L1/L12	7'-2"	D	20	21	23	25	7'-0"	E	20	21	24	25	6'-9"	E	20	21	24	25	6'-5"	E	20	22	24	26
Double 2"x6.625"	L2/L12	6'-7"	D	19	21	23	25	6'-5"	D	19	21	24	25	6'-3"	D	20	21	24	25	5'-11"	D	20	22	24	26
16 G Steel C	L18	6'-2"	C	19	21	23	25	5'-11"	C	19	21	24	25	5'-7"	C	19	21	24	25	5'-2"	C	19	22	24	26
14 G Steel C	L18	8'-4"	E	21	21	23	25	8'-0"	E	21	21	24	25	7'-7"	E	21	21	24	25	7'-1"	E	21	22	24	26
12 G Steel C	L18	13'-7"	H1	25	24	27	28	13'-3"	H1	25	24	27	28	12'-9"	H1	25	24	27	28	12'-2"	H1	25	24	27	29
Double 16 G Steel C	L18/L8	15'-4"	H1	26	25	27	29	14'-11"	H1	26	25	28	29	14'-6"	H1	26	25	28	29	13'-11"	H1	26	25	28	30
Double 14 G Steel C	L18/L8	18'-0"	H1	27	26	29	30	17'-7"	H1	27	26	29	30	17'-2"	H2	27	26	29	31	16'-6"	H2	28	26	29	31
Double 12 G Steel C	L18/L8	21'-8"	H2	29	27	30	32	21'-5"	H2	29	27	30	32	21'-1"	H3	29	27	30	32	20'-6"	H3	30	28	31	33

Header	Detail	trib 14'	Min Post Type	Uplift Footing (in)	8'	12'	15'	trib 15'	Min Post Type	Uplift Footing (in)	8'	12'	15'
On Slab	On Slab	n/a	A1					n/a	A1				
0.042"x3"x8"	L1	3'-7"	A3	17	22	25	26	3'-4"	A3	17	23	25	27
Double 3"x8"	L1/L12	6'-1"	E	20	22	25	26	5'-9"	E	21	23	25	27
Double 2"x6.625"	L2/L12	5'-8"	E	20	22	25	26	5'-5"	E	20	23	25	27
16 G Steel C	L18	4'-10"	C	19	22	25	26	4'-6"	C	19	23	25	27
14 G Steel C	L18	6'-6"	E	21	22	25	26	6'-1"	E	21	23	25	27
12 G Steel C	L18	11'-6"	H1	25	24	27	29	11'-0"	H1	25	25	27	29
Double 16 G Steel C	L18/L8	13'-4"	H1	26	25	28	30	12'-10"	H1	27	26	28	30
Double 14 G Steel C	L18/L8	15'-10"	H2	28	26	29	31	15'-3"	H2	28	27	30	31
Double 12 G Steel C	L18/L8	20'-0"	H3	30	28	31	33	19'-7"	H4	31	28	32	33

Ground Snow Load: 20 psf — Live Load: 20 psf — Wind Speed: 95 MPH EXPOSURE C or 110 MPH EXPOSURE B — Seismic Ss= 150% — Seismic Design Category D — Structures are Attached to Existing Building

Table 2.11c

cubic footing "d": Constrained Footing (in), Max Post Length 8', 12', 15'

Header	Detail	trib 3'	Min Post Type	Uplift Footing (in)	8'	12'	15'	trib 3.5'	Min Post Type	Uplift Footing (in)	8'	12'	15'	trib 4'	Min Post Type	Uplift Footing (in)	8'	12'	15'	trib 4.5'	Min Post Type	Uplift Footing (in)	8'	12'	15'
On Slab	On Slab	11'-10"	A1					10'-2"	A1					8'-11"	A1					7'-11"	A1				
0.042"x3"x8"	L1	10'-5"	A1	17	17	19	20	9'-6"	A1	17	18	20	21	8'-8"	A1	18	19	21	22	8'-1"	A1	18	19	21	22
Double 3"x8"	L1/L12	15'-5"	A2	19	18	20	21	14'-3"	A3	20	18	20	21	13'-1"	A3	20	19	21	22	12'-4"	A3	21	19	21	22
Double 2"x6.625"	L2/L12	13'-9"	A1	19	17	19	20	12'-8"	A2	19	18	20	21	11'-9"	A2	20	19	21	22	11'-0"	A3	20	19	21	22
16 G Steel C	L18	17'-6"	A3	20	18	20	22	15'-10"	A3	21	19	21	22	14'-3"	A3	21	19	21	22	13'-2"	B	21	19	21	22
14 G Steel C	L18	21'-0"	C	22	19	21	23	19'-2"	C	22	20	22	23	17'-4"	D	22	20	22	23	16'-1"	D	23	20	22	23
12 G Steel C	L18	26'-4"	D	23	20	23	24	25'-1"	E	24	21	23	25	24'-0"	E	25	21	24	25	23'-1"	E	25	22	24	26
Double 16 G Steel C	L18/L8	25'-5"	D	23	20	22	24	24'-2"	E	24	21	23	24	23'-2"	E	25	21	24	25	22'-4"	E	25	22	24	25
Double 14 G Steel C	L18/L8	27'-9"	E	24	21	23	24	26'-5"	E	24	21	24	25	25'-3"	E	25	22	24	25	24'-4"	F	26	22	25	26
Double 12 G Steel C	L18/L8	33'-3"	E	25	22	24	25	31'-7"	F	26	22	25	26	30'-3"	G	27	23	25	27	29'-2"	G	28	23	26	27

Header	Detail	trib 5'	Min Post Type	Uplift Footing (in)	8'	12'	15'	trib 5.5'	Min Post Type	Uplift Footing (in)	8'	12'	15'	trib 6'	Min Post Type	Uplift Footing (in)	8'	12'	15'	trib 6.5'	Min Post Type	Uplift Footing (in)	8'	12'	15'
On Slab	On Slab	7'-1"	A1					6'-5"	A1					5'-11"	A1					5'-5"	A1				
0.042"x3"x8"	L1	7'-7"	A1	18	20	22	23	7'-2"	A1	18	20	22	24	6'-8"	A1	19	21	23	24	6'-4"	A1	19	21	23	25
Double 3"x8"	L1/L12	11'-7"	A3	21	20	22	23	11'-0"	C	21	20	22	24	10'-5"	C	22	21	23	24	9'-11"	C	22	21	23	25
Double 2"x6.625"	L2/L12	10'-5"	A3	20	20	22	23	9'-11"	A3	21	20	22	24	9'-5"	A3	21	21	23	24	9'-0"	A3	21	21	23	25
16 G Steel C	L18	12'-4"	C	21	20	22	23	11'-6"	C	22	20	22	24	10'-9"	C	22	21	23	24	10'-2"	C	22	21	23	25
14 G Steel C	L18	15'-0"	D	23	20	22	24	14'-1"	D	23	20	22	24	13'-2"	E	23	21	23	24	12'-6"	E	23	21	23	25
12 G Steel C	L18	22'-4"	F	26	22	25	26	21'-4"	G	27	23	25	26	20'-1"	G	27	23	25	27	19'-2"	G	27	23	25	27
Double 16 G Steel C	L18/L8	21'-7"	F	26	22	24	26	20'-11"	F	26	22	25	26	20'-4"	G	27	23	25	27	19'-9"	G	27	23	26	27
Double 14 G Steel C	L18/L8	23'-6"	G	27	23	25	26	22'-9"	G	27	23	25	27	22'-2"	G	28	23	26	27	21'-7"	G	28	24	26	28
Double 12 G Steel C	L18/L8	28'-2"	G	28	24	26	28	27'-3"	H1	29	24	27	28	26'-6"	H1	29	24	27	29	25'-10"	H1	30	25	27	29

Header	Detail	trib 7'	Min Post Type	Uplift Footing (in)	8'	12'	15'	trib 7.5'	Min Post Type	Uplift Footing (in)	8'	12'	15'	trib 8'	Min Post Type	Uplift Footing (in)	8'	12'	15'
On Slab	On Slab	5'-1"	A1					4'-9"	A1					4'-5"	A1				
0.042"x3"x8"	L1	6'-1"	A2	19	21	24	25	5'-9"	A2	19	22	24	26	5'-6"	A2	19	22	25	26
Double 3"x8"	L1/L12	9'-6"	C	22	21	24	25	9'-2"	D	22	22	24	26	8'-9"	D	22	22	25	26
Double 2"x6.625"	L2/L12	8'-8"	C	21	21	24	25	8'-4"	C	22	22	24	26	8'-0"	C	22	22	25	26
16 G Steel C	L18	9'-8"	C	22	21	24	25	9'-1"	C	22	22	24	26	8'-5"	C	22	22	25	26
14 G Steel C	L18	11'-11"	E	24	21	24	25	11'-4"	E	24	22	24	26	10'-9"	E	24	22	25	26
12 G Steel C	L18	18'-4"	G	27	23	26	27	17'-6"	G	28	23	26	27	16'-9"	G	28	23	26	27
Double 16 G Steel C	L18/L8	19'-4"	G	28	23	26	27	18'-10"	G	28	24	26	28	18'-2"	G	28	24	26	28
Double 14 G Steel C	L18/L8	21'-1"	H1	29	24	26	28	20'-7"	H1	29	24	27	28	20'-2"	H1	29	24	27	29
Double 12 G Steel C	L18/L8	25'-2"	H1	30	25	28	29	24'-8"	H1	31	25	28	30	24'-1"	H1	31	26	28	30

cubic footing "d": Constrained Footing (in), Max Post Length 8', 12', 15'

Header	Detail	trib 9'	Min Post Type	Uplift Footing (in)	8'	12'	15'	trib 10'	Min Post Type	Uplift Footing (in)	8'	12'	15'	trib 11'	Min Post Type	Uplift Footing (in)	8'	12'	15'	trib 12'	Min Post Type	Uplift Footing (in)	8'	12'	15'
On Slab	On Slab	3'-11"	A1					3'-6"	A1					3'-2"	A1					2'-11"	A1				
0.042"x3"x8"	L1	5'-1"	A1	19	23	25	27	4'-8"	A1	20	23	26	28	4'-4"	A1	20	24	27	28	4'-0"	A1	20	25	27	29
Double 3"x8"	L1/L12	8'-2"	A1	23	23	25	27	7'-7"	A1	23	23	26	28	7'-2"	A1	23	24	27	28	6'-9"	A1	23	25	27	29
Double 2"x6.625"	L2/L12	7'-5"	A1	22	23	25	27	7'-0"	A1	22	23	26	28	6'-7"	A1	23	24	27	28	6'-3"	A1	23	25	27	29
16 G Steel C	L18	7'-6"	A1	22	23	25	27	6'-9"	A1	22	23	26	28	6'-2"	A1	22	24	27	28	5'-7"	A1	22	25	27	29
14 G Steel C	L18	9'-11"	A1	24	23	25	27	9'-1"	A1	24	23	26	28	8'-4"	A1	24	24	27	28	7'-7"	A1	24	25	27	29
12 G Steel C	L18	15'-7"	A2	28	24	26	28	14'-5"	A3	28	24	26	28	13'-7"	A3	29	24	27	28	12'-9"	A3	29	25	27	29
Double 16 G Steel C	L18/L8	17'-1"	A3	29	24	27	28	16'-1"	A3	29	24	27	29	15'-4"	C	30	25	27	29	14'-6"	C	30	25	28	29
Double 14 G Steel C	L18/L8	19'-5"	A3	30	25	28	29	18'-9"	C	31	25	28	30	18'-0"	D	32	26	29	30	17'-2"	D	32	26	29	31
Double 12 G Steel C	L18/L8	23'-2"	D	32	26	29	31	22'-5"	D	33	27	29	31	21'-8"	E	34	27	30	32	21'-1"	E	34	27	30	32

Header	Detail	trib 13'	Min Post Type	Uplift Footing (in)	8'	12'	15'	trib 14'	Min Post Type	Uplift Footing (in)	8'	12'	15'	trib 15'	Min Post Type	Uplift Footing (in)	8'	12'	15'	trib 16'	Min Post Type	Uplift Footing (in)	8'	12'	15'
On Slab	On Slab	2'-8"	A1					2'-6"	A1					2'-4"	A1					2'-2"	A1				
0.042"x3"x8"	L1	3'-9"	A1	20	25	28	29	3'-7"	A1	20	26	28	30	3'-4"	A1	20	26	29	31	3'-2"	A1	20	26	29	31
Double 3"x8"	L1/L12	6'-5"	A1	24	25	28	29	6'-1"	A1	24	26	28	30	5'-9"	A1	24	26	29	31	5'-6"	A1	24	26	29	31
Double 2"x6.625"	L2/L12	5'-11"	A1	23	25	28	29	5'-8"	A1	23	26	28	30	5'-5"	A1	24	26	29	31	5'-2"	A1	24	26	29	31
16 G Steel C	L18	5'-2"	A1	22	25	28	29	4'-10"	A1	22	26	28	30	4'-6"	A1	22	26	29	31	4'-3"	A1	22	26	29	31
14 G Steel C	L18	7'-1"	A1	24	25	28	29	6'-6"	A1	24	26	28	30	6'-1"	A1	24	26	29	31	5'-8"	A1	24	26	29	31
12 G Steel C	L18	12'-2"	C	29	25	28	29	11'-6"	C	29	26	28	30	11'-0"	C	30	26	29	31	10'-6"	D	30	26	29	31
Double 16 G Steel C	L18/L8	13'-11"	D	31	25	28	30	13'-4"	D	31	26	28	30	12'-10"	D	31	26	29	31	12'-4"	E	32	26	29	31
Double 14 G Steel C	L18/L8	16'-6"	E	32	26	29	31	15'-10"	E	33	26	29	31	15'-3"	E	33	27	30	31	14'-8"	E	33	27	30	32
Double 12 G Steel C	L18/L8	20'-6"	E	35	28	31	33	20'-0"	F	35	28	31	33	19'-7"	G	36	28	32	33	19'-2"	G	37	29	32	34

Header	Detail	trib 17'	Min Post Type	Uplift Footing (in)	8'	12'	15'	trib 18'	Min Post Type	Uplift Footing (in)	8'	12'	15'
On Slab	On Slab	2'-1"	A1					1'-11"	A1				
0.042"x3"x8"	L1	3'-0"	A1	20	27	30	32	2'-10"	A1	20	27	30	32
Double 3"x8"	L1/L12	5'-3"	A1	24	27	30	32	5'-1"	A1	24	27	30	32
Double 2"x6.625"	L2/L12	5'-0"	A1	24	27	30	32	4'-9"	A1	24	27	30	32
16 G Steel C	L18	4'-0"	A1	22	27	30	32	3'-9"	A1	22	27	30	32
14 G Steel C	L18	5'-5"	A1	24	27	30	32	5'-1"	A1	24	27	30	32
12 G Steel C	L18	10'-1"	D	30	27	30	32	9'-8"	D	30	27	30	32
Double 16 G Steel C	L18/L8	11'-11"	E	32	27	30	32	11'-6"	E	32	27	30	32
Double 14 G Steel C	L18/L8	14'-2"	E	34	27	30	32	13'-8"	E	34	27	30	32
Double 12 G Steel C	L18/L8	18'-9"	G	37	29	32	34	18'-5"	G	38	29	33	34

Registered Professional Engineer (Civil)
CERTIFICATE NO. 39702
CARL PUTNAM
Date Signed
ARIZONA U.S.A.
Expires 09/30/2024

SECTION 2.0 POST SPACING, POST TYPE AND FOOTING SIZE FOR LATTICE COVERS

Roof Solidity: 60%

Ground Snow Load: 20 psf | **Live Load: 20 psf** | **Wind Speed: 100 MPH EXPOSURE C or 115 MPH EXPOSURE B** | **Seismic Ss= 150%** | **Seismic Design Category D** | **Structures are Attached to Existing Building**

Table 2.12a

Header	Detail	trib 3'	Min Post Type	Uplift Footing (in)	Constrained Footing (in) Max Post Length 8'	12'	15'	trib 3.5'	Min Post Type	Uplift Footing (in)	8'	12'	15'	trib 4'	Min Post Type	Uplift Footing (in)	8'	12'	15'	trib 4.5'	Min Post Type	Uplift Footing (in)	8'	12'	15'	trib 5'	Min Post Type	Uplift Footing (in)	8'	12'	15'	trib 5.5'	Min Post Type	Uplift Footing (in)	8'	12'	15'
On Slab	On Slab	11'-10"	A1					10'-2"	A1					8'-11"	A1					7'-11"	A1					7'-1"	A1					6'-5"	A1				
0.042"x3"x8"	L1	10'-5"	A1	18	18	20	21	9'-6"	A1	18	18	20	22	8'-8"	A1	18	19	21	22	8'-1"	A1	19	20	22	23	7'-7"	A1	19	20	22	24	7'-2"	A1	19	21	23	24
Double 3"x8"	L1/L12	15'-5"	A2	20	18	20	21	14'-3"	A3	21	18	20	22	13'-1"	A3	21	19	21	22	12'-4"	A3	21	20	22	23	11'-7"	A3	22	20	22	24	11'-0"	C	22	21	23	24
Double 2"x6.625"	L2/L12	13'-9"	A1	19	18	20	21	12'-8"	A2	20	18	20	22	11'-9"	A2	20	19	21	22	11'-0"	A3	21	20	22	23	10'-5"	A3	21	20	22	24	9'-11"	A3	21	21	23	24
16 G Steel C	L18	17'-6"	A3	21	18	20	22	15'-10"	A3	21	19	21	22	14'-3"	A3	22	19	21	22	13'-2"	B	22	20	22	23	12'-4"	C	22	20	22	24	11'-6"	C	22	21	23	24
14 G Steel C	L18	21'-0"	C	22	19	21	23	19'-2"	C	23	20	22	23	17'-4"	D	23	20	22	23	16'-1"	D	23	20	22	23	15'-0"	D	24	20	22	24	14'-1"	D	24	21	23	24
12 G Steel C	L18	26'-4"	D	24	20	23	24	25'-1"	E	25	21	23	25	24'-0"	E	26	21	24	25	23'-1"	E	26	22	24	26	22'-4"	F	27	22	25	26	21'-4"	G	28	23	25	26
Double 16 G Steel C	L18/L8	25'-5"	D	24	20	22	24	24'-2"	E	25	21	23	24	23'-2"	E	25	21	24	25	22'-4"	E	26	22	24	25	21'-7"	F	27	22	24	26	20'-11"	F	27	22	25	26
Double 14 G Steel C	L18/L8	27'-9"	E	25	21	23	24	26'-5"	E	25	21	24	25	25'-3"	E	26	22	24	25	24'-4"	F	27	22	25	26	23'-6"	G	28	23	25	26	22'-9"	G	28	23	25	27
Double 12 G Steel C	L18/L8	33'-3"	E	26	22	24	25	31'-7"	F	27	22	25	26	30'-3"	G	28	23	25	27	29'-2"	G	29	23	26	27	28'-2"	G	29	24	26	28	27'-3"	H1	30	24	27	28

Header	Detail	trib 6'	Min Post Type	Uplift Footing (in)	Constrained Footing (in) Max Post Length 8'	12'	15'	trib 6.5'	Min Post Type	Uplift Footing (in)	8'	12'	15'	trib 7'	Min Post Type	Uplift Footing (in)	8'	12'	15'	trib 7.5'	Min Post Type	Uplift Footing (in)	8'	12'	15'	trib 8'	Min Post Type	Uplift Footing (in)	8'	12'	15'
On Slab	On Slab	5'-11"	A1					5'-5"	A1					5'-1"	A1					4'-9"	A1					4'-5"	A1				
0.042"x3"x8"	L1	6'-8"	A1	19	21	23	25	6'-4"	A1	19	22	24	25	6'-1"	A2	20	22	24	26	5'-9"	A2	20	22	25	26	5'-6"	A2	20	23	25	27
Double 3"x8"	L1/L12	10'-5"	C	22	21	23	25	9'-11"	C	23	22	24	25	9'-6"	C	23	22	24	26	9'-2"	D	23	22	25	26	8'-9"	D	23	23	25	27
Double 2"x6.625"	L2/L12	9'-5"	A3	22	21	23	25	9'-0"	A3	22	22	24	25	8'-8"	C	22	22	24	26	8'-4"	C	22	22	25	26	8'-0"	C	22	23	25	27
16 G Steel C	L18	10'-9"	C	23	21	23	25	10'-2"	C	23	22	24	25	9'-8"	C	23	22	24	26	9'-1"	C	23	22	25	26	8'-5"	C	23	23	25	27
14 G Steel C	L18	13'-2"	E	24	21	23	25	12'-6"	E	24	22	24	25	11'-11"	E	25	22	24	26	11'-4"	E	25	22	25	26	10'-9"	E	25	23	25	27
12 G Steel C	L18	20'-1"	G	28	23	25	27	19'-2"	G	28	23	25	27	18'-4"	G	28	23	26	27	17'-6"	G	29	23	26	27	16'-9"	G	29	23	26	27
Double 16 G Steel C	L18/L8	20'-4"	G	28	23	25	27	19'-9"	G	28	23	26	27	19'-4"	G	29	23	26	27	18'-10"	G	29	24	26	28	18'-2"	G	30	24	26	28
Double 14 G Steel C	L18/L8	22'-2"	G	29	23	26	27	21'-7"	G	29	24	26	28	21'-1"	H1	30	24	26	28	20'-7"	H1	30	24	27	28	20'-2"	H1	31	24	27	29
Double 12 G Steel C	L18/L8	26'-6"	H1	30	24	27	29	25'-10"	H1	31	25	27	29	25'-2"	H1	32	25	28	29	24'-8"	H1	32	25	28	30	24'-1"	H1	32	26	28	30

Header	Detail	trib 8.5'	Min Post Type	Uplift Footing (in)	Footing (in) Max Post Length 8'	12'	15'	trib 9'	Min Post Type	Uplift Footing (in)	8'	12'	15'	trib 10'	Min Post Type	Uplift Footing (in)	8'	12'	15'	trib 10.5'	Min Post Type	Uplift Footing (in)	8'	12'	15'	trib 11'	Min Post Type	Uplift Footing (in)	8'	12'	15'
On Slab	On Slab	4'-2"	A1					3'-11"	A1					3'-6"	A1					3'-4"	A1					3'-2"	A1				
0.042"x3"x8"	L1	5'-3"	A2	20	23	26	27	5'-1"	A2	20	23	26	28	4'-8"	A2	20	24	27	28	4'-6"	A2	20	24	27	29	4'-4"	A2	20	25	27	29
Double 3"x8"	L1/L12	8'-5"	D	23	23	26	27	8'-2"	D	24	23	26	28	7'-7"	D	24	24	27	28	7'-4"	D	24	24	27	29	7'-2"	D	24	25	27	29
Double 2"x6.625"	L2/L12	7'-8"	C	23	23	26	27	7'-5"	C	23	23	26	28	7'-0"	D	23	24	27	28	6'-9"	D	23	24	27	29	6'-7"	D	23	25	27	29
16 G Steel C	L18	7'-11"	C	23	23	26	27	7'-6"	C	23	23	26	28	6'-9"	C	23	24	27	28	6'-5"	C	23	24	27	29	6'-2"	C	23	25	27	29
14 G Steel C	L18	10'-4"	E	25	23	26	27	9'-11"	E	25	23	26	28	9'-1"	E	25	24	27	28	8'-8"	E	25	24	27	29	8'-4"	E	25	25	27	29
12 G Steel C	L18	16'-1"	G	29	23	26	28	15'-7"	G	29	24	26	28	14'-5"	G	30	24	27	28	14'-0"	H1	30	24	27	29	13'-7"	H1	30	25	27	29
Double 16 G Steel C	L18/L8	17'-7"	H1	30	24	27	28	17'-1"	H1	30	24	27	28	16'-1"	H1	31	24	27	29	15'-8"	H1	31	25	27	29	15'-4"	H1	31	25	27	29
Double 14 G Steel C	L18/L8	19'-9"	H1	31	25	27	29	19'-5"	H1	31	25	28	29	18'-9"	H1	32	25	28	30	18'-5"	H1	32	26	28	30	18'-0"	H1	33	26	29	30
Double 12 G Steel C	L18/L8	23'-8"	H1	33	26	29	30	23'-2"	H2	33	26	29	31	22'-5"	H2	34	27	29	31	22'-0"	H2	35	27	30	31	21'-8"	H2	35	27	30	32

Header	Detail	trib 11.5'	Min Post Type	Uplift Footing (in)	Footing (in) Max Post Length 8'	12'	15'	trib 12'	Min Post Type	Uplift Footing (in)	8'	12'	15'	trib 13'	Min Post Type	Uplift Footing (in)	8'	12'	15'	trib 14'	Min Post Type	Uplift Footing (in)	8'	12'	15'	trib 15'	Min Post Type	Uplift Footing (in)	8'	12'	15'
On Slab	On Slab	3'-1"	A1					2'-11"	A1					2'-8"	A1					2'-6"	A1					2'-4"	A1				
0.042"x3"x8"	L1	4'-2"	A2	21	25	28	29	4'-0"	A2	21	25	28	30	3'-9"	A3	21	26	29	30	3'-7"	A3	21	26	29	31	3'-4"	A3	21	27	30	31
Double 3"x8"	L1/L12	7'-0"	E	24	25	28	29	6'-9"	E	24	25	28	30	6'-5"	E	25	26	29	30	6'-1"	E	25	26	29	31	5'-9"	E	25	27	30	31
Double 2"x6.625"	L2/L12	6'-5"	D	24	25	28	29	6'-3"	D	24	25	28	30	5'-11"	D	24	26	29	30	5'-8"	E	24	26	29	31	5'-5"	E	24	27	30	31
16 G Steel C	L18	5'-11"	C	23	25	28	29	5'-7"	C	23	25	28	30	5'-2"	C	23	26	29	30	4'-10"	C	23	26	29	31	4'-6"	C	23	27	30	31
14 G Steel C	L18	8'-0"	E	25	25	28	29	7'-7"	E	25	25	28	30	7'-1"	E	25	26	29	30	6'-6"	E	25	26	29	31	6'-1"	E	25	27	30	31
12 G Steel C	L18	13'-3"	H1	30	25	28	29	12'-9"	H1	30	25	28	30	12'-2"	H1	30	26	29	30	11'-6"	H1	31	26	29	31	11'-0"	H1	31	27	30	31
Double 16 G Steel C	L18/L8	14'-11"	H1	31	25	28	29	14'-6"	H1	31	25	28	30	13'-11"	H1	32	26	29	30	13'-4"	H1	32	26	29	31	12'-10"	H1	32	27	30	31
Double 14 G Steel C	L18/L8	17'-7"	H1	33	26	29	30	17'-2"	H2	33	26	29	31	16'-6"	H2	34	26	29	31	15'-10"	H2	34	26	29	31	15'-3"	H2	34	27	30	31
Double 12 G Steel C	L18/L8	21'-5"	H2	35	27	30	32	21'-1"	H3	36	27	30	32	20'-6"	H3	36	28	31	33	20'-0"	H3	37	28	31	33	19'-7"	H4	37	28	32	33

Amerimax Exterior Home Products
28921 US Hwy 74
Romoland, CA 92585

Carl Putnam, P. E.
3441 Ivylink Place
Lynchburg, VA 24503
carlputnam@comcast.net

Ground Snow Load: 20 psf | **Live Load: 20 psf** | **Wind Speed: 100 MPH EXPOSURE C or 115 MPH EXPOSURE B** | **Seismic Ss= 150%** | **Seismic Design Category D** | **Freestanding Structures**

Table 2.12b

Header	Detail	trib 3'	Min Post Type	Uplift Footing (in)	cubic footing "d" Constrained Footing (in) Max Post Length 8'	12'	15'	trib 3.5'	Min Post Type	Uplift Footing (in)	8'	12'	15'	trib 4'	Min Post Type	Uplift Footing (in)	8'	12'	15'	trib 4.5'	Min Post Type	Uplift Footing (in)	8'	12'	15'	trib 5'	Min Post Type	Uplift Footing (in)	8'	12'	15'	trib 5.5'	Min Post Type	Uplift Footing (in)	8'	12'	15'
On Slab	On Slab	n/a	A1					n/a	A1					n/a	A1					n/a	A1					n/a	A1					n/a	A1				
0.042"x3"x8"	L1	10'-5"	A1	15	25	27	29	9'-6"	A1	16	24	27	28	8'-8"	A1	16	24	26	28	8'-1"	A1	16	23	26	27	7'-7"	A1	17	23	25	27	7'-2"	A1	17	23	25	26
Double 3"x8"	L1/L12	15'-5"	A2	18	27	30	32	14'-3"	A3	18	27	30	32	13'-1"	A3	18	26	29	31	12'-4"	A3	19	26	29	30	11'-7"	A3	19	25	28	30	11'-0"	C	19	25	28	30
Double 2"x6.625"	L2/L12	13'-9"	A1	17	25	28	30	12'-8"	A2	17	25	28	29	11'-9"	A2	18	24	27	29	11'-0"	A3	18	24	27	28	10'-5"	A3	18	24	26	28	9'-11"	A3	19	23	26	27
16 G Steel C	L18	17'-6"	A3	18	28	31	33	15'-10"	A3	19	28	31	32	14'-3"	A3	19	27	30	32	13'-2"	B	19	26	29	31	12'-4"	C	19	26	29	30	11'-6"	C	20	25	28	30
14 G Steel C	L18	21'-0"	C	20	30	33	35	19'-2"	C	20	29	32	34	17'-4"	D	20	28	31	33	16'-1"	D	21	28	31	32	15'-0"	D	21	27	30	32	14'-1"	D	21	27	30	31
12 G Steel C	L18	26'-4"	D	21	31	35	37	25'-1"	E	22	31	34	36	24'-0"	E	23	31	34	36	23'-1"	E	23	30	34	36	22'-4"	F	24	30	33	35	21'-4"	G	24	30	33	35
Double 16 G Steel C	L18/L8	25'-5"	D	21	31	34	36	24'-2"	E	22	31	34	36	23'-2"	E	22	30	34	36	22'-4"	E	23	30	33	35	21'-7"	F	23	30	33	35	20'-11"	F	24	30	33	35
Double 14 G Steel C	L18/L8	27'-9"	E	21	32	35	37	26'-5"	E	22	31	35	37	25'-3"	E	23	31	34	36	24'-4"	F	24	31	34	36	23'-6"	G	24	30	34	36	22'-9"	G	25	30	34	35
Double 12 G Steel C	L18/L8	33'-3"	E	23	33	37	39	31'-7"	F	24	33	36	39	30'-3"	G	24	33	36	38	29'-2"	G	25	32	36	38	28'-2"	G	26	32	35	37	27'-3"	H1	26	32	35	37

Header	Detail	trib 6'	Min Post Type	Uplift Footing (in)	cubic footing "d" Constrained Footing (in) Max Post Length 8'	12'	15'	trib 6.5'	Min Post Type	Uplift Footing (in)	8'	12'	15'	trib 7'	Min Post Type	Uplift Footing (in)	8'	12'	15'	trib 7.5'	Min Post Type	Uplift Footing (in)	8'	12'	15'	trib 8'	Min Post Type	Uplift Footing (in)	8'	12'	15'
On Slab	On Slab	n/a	A1					n/a	A1					n/a	A1					n/a	A1					n/a	A1				
0.042"x3"x8"	L1	6'-8"	A1	17	22	25	26	6'-4"	A1	17	22	24	26	6'-1"	A2	17	22	24	25	5'-9"	A2	17	22	24	25	5'-6"	A2	17	22	24	26
Double 3"x8"	L1/L12	10'-5"	C	20	25	27	29	9'-11"	C	20	25	27	29	9'-6"	C	20	24	27	28	9'-2"	D	20	24	27	28	8'-9"	D	20	24	26	28
Double 2"x6.625"	L2/L12	9'-5"	A3	19	23	26	27	9'-0"	A3	19	23	25	27	8'-8"	C	19	23	25	26	8'-4"	C	20	22	25	26	8'-0"	C	20	22	24	26
16 G Steel C	L18	10'-9"	C	20	25	28	29	10'-2"	C	20	25	27	29	9'-8"	C	20	24	27	29	9'-1"	C	20	24	27	28	8'-5"	C	20	23	26	28
14 G Steel C	L18	13'-2"	E	21	26	29	31	12'-6"	E	21	26	29	30	11'-11"	E	21	26	28	30	11'-4"	E	22	25	28	30	10'-9"	E	22	25	28	29
12 G Steel C	L18	20'-1"	G	24	29	32	34	19'-2"	G	25	29	32	34	18'-4"	G	25	29	32	34	17'-6"	G	25	28	31	33	16'-9"	G	25	28	31	33
Double 16 G Steel C	L18/L8	20'-4"	G	24	29	33	34	19'-9"	G	25	29	32	34	19'-4"	G	25	29	32	34	18'-10"	G	26	29	32	34	18'-2"	G	26	29	32	34
Double 14 G Steel C	L18/L8	22'-2"	G	25	30	33	35	21'-7"	G	26	30	33	35	21'-1"	H1	26	30	33	35	20'-7"	H1	26	29	33	35	20'-2"	H1	27	29	33	34
Double 12 G Steel C	L18/L8	26'-6"	H1	27	31	35	37	25'-10"	H1	27	31	35	37	25'-2"	H1	28	31	34	36	24'-8"	H1	28	31	34	36	24'-1"	H1	28	31	34	36

Header	Detail	trib 8.5'	Min Post Type	Uplift Footing (in)	cubic footing "d" Constrained Footing (in) Max Post Length 8'	12'	15'	trib 9'	Min Post Type	Uplift Footing (in)	8'	12'	15'	trib 10'	Min Post Type	Uplift Footing (in)	8'	12'	15'	trib 10.5'	Min Post Type	Uplift Footing (in)	8'	12'	15'	trib 11'	Min Post Type	Uplift Footing (in)	8'	12'	15'
On Slab	On Slab	n/a	A1					n/a	A1					n/a	A1					n/a	A1					n/a	A1				
0.042"x3"x8"	L1	5'-3"	A2	17	22	25	26	5'-1"	A2	18	23	25	27	4'-8"	A2	18	23	26	27	4'-6"	A2	18	24	26	28	4'-4"	A2	18	24	26	28
Double 3"x8"	L1/L12	8'-5"	D	20	24	26	28	8'-2"	D	21	23	26	27	7'-7"	D	21	23	26	27	7'-4"	D	21	24	26	28	7'-2"	D	21	24	26	28
Double 2"x6.625"	L2/L12	7'-8"	C	20	22	25	26	7'-5"	C	20	23	25	27	7'-0"	D	20	23	26	27	6'-9"	D	20	24	26	28	6'-7"	D	21	24	26	28
16 G Steel C	L18	7'-11"	C	20	23	26	27	7'-6"	C	20	23	25	27	6'-9"	C	20	23	26	27	6'-5"	C	20	24	26	28	6'-2"	C	20	24	26	28
14 G Steel C	L18	10'-4"	E	22	25	27	29	9'-11"	E	22	24	27	29	9'-1"	E	22	24	27	28	8'-8"	E	22	24	26	28	8'-4"	E	22	24	26	28
12 G Steel C	L18	16'-1"	G	25	28	31	33	15'-7"	G	26	27	30	32	14'-5"	G	26	27	30	32	14'-0"	H1	26	27	30	31	13'-7"	H1	26	27	29	31
Double 16 G Steel C	L18/L8	17'-7"	H1	26	28	31	33	17'-1"	H1	26	28	31	33	16'-1"	H1	27	28	31	32	15'-8"	H1	27	28	31	32	15'-4"	H1	27	27	30	32
Double 14 G Steel C	L18/L8	19'-9"	H1	27	29	32	34	19'-5"	H1	27	29	32	34	18'-9"	H1	28	29	32	34	18'-5"	H1	28	29	32	34	18'-0"	H1	29	29	32	33
Double 12 G Steel C	L18/L8	23'-8"	H1	29	31	34	36	23'-2"	H2	29	30	34	36	22'-5"	H2	30	30	33	35	22'-0"	H2	30	30	33	35	21'-8"	H2	31	30	33	35

Header	Detail	trib 11.5'	Min Post Type	Uplift Footing (in)	cubic footing "d" Constrained Footing (in) Max Post Length 8'	12'	15'	trib 12'	Min Post Type	Uplift Footing (in)	8'	12'	15'	trib 13'	Min Post Type	Uplift Footing (in)	8'	12'	15'	trib 14'	Min Post Type	Uplift Footing (in)	8'	12'	15'	trib 15'	Min Post Type	Uplift Footing (in)	8'	12'	15'
On Slab	On Slab	n/a	A1					n/a	A1					n/a	A1					n/a	A1					n/a	A1				
0.042"x3"x8"	L1	4'-2"	A2	18	24	27	28	4'-0"	A2	18	24	27	29	3'-9"	A3	18	25	28	29	3'-7"	A3	18	25	28	30	3'-4"	A3	18	26	29	30
Double 3"x8"	L1/L12	7'-0"	E	21	24	27	28	6'-9"	E	21	24	27	29	6'-5"	E	22	25	28	29	6'-1"	E	22	25	28	30	5'-9"	E	22	26	29	30
Double 2"x6.625"	L2/L12	6'-5"	D	21	24	27	28	6'-3"	D	21	24	27	29	5'-11"	D	21	25	28	29	5'-8"	E	21	25	28	30	5'-5"	E	21	26	29	30
16 G Steel C	L18	5'-11"	C	20	24	27	28	5'-7"	C	20	24	27	29	5'-2"	C	20	25	28	29	4'-10"	C	20	25	28	30	4'-6"	C	20	26	29	30
14 G Steel C	L18	8'-0"	E	22	24	27	28	7'-7"	E	22	24	27	29	7'-1"	E	22	25	28	29	6'-6"	E	22	25	28	30	6'-1"	E	22	26	29	30
12 G Steel C	L18	13'-3"	H1	26	26	29	31	12'-9"	H1	26	26	29	31	12'-2"	H1	27	26	29	30	11'-6"	H1	27	25	28	30	11'-0"	H1	27	26	29	30
Double 16 G Steel C	L18/L8	14'-11"	H1	27	27	30	32	14'-6"	H1	27	27	30	32	13'-11"	H1	28	27	30	31	13'-4"	H1	28	26	29	31	12'-10"	H1	28	26	29	31
Double 14 G Steel C	L18/L8	17'-7"	H1	29	28	31	33	17'-2"	H2	29	28	31	33	16'-6"	H2	29	28	31	33	15'-10"	H2	30	28	31	32	15'-3"	H2	30	27	30	32
Double 12 G Steel C	L18/L8	21'-5"	H2	31	30	33	35	21'-1"	H3	31	30	33	35	20'-6"	H3	32	29	33	35	20'-0"	H3	32	29	32	34	19'-7"	H4	33	29	32	34

Ground Snow Load: 20 psf | **Live Load: 20 psf** | **Wind Speed: 95 MPH EXPOSURE C or 110 MPH EXPOSURE B** | **Seismic Ss= 150%** | **Seismic Design Category D** | **Freestanding Structures**

Table 2.12c

Header	Detail	trib 3'	Min Post Type	Uplift Footing (in)	cubic footing "d" Constrained Footing (in) Max Post Length 8'	12'	15'	trib 3.5'	Min Post Type	Uplift Footing (in)	8'	12'	15'	trib 4'	Min Post Type	Uplift Footing (in)	8'	12'	15'	trib 4.5'	Min Post Type	Uplift Footing (in)	8'	12'	15'	trib 5'	Min Post Type	Uplift Footing (in)	8'	12'	15'	trib 5.5'	Min Post Type	Uplift Footing (in)	8'	12'	15'
On Slab	On Slab	n/a	A1					n/a	A1					n/a	A1					n/a	A1					n/a	A1					n/a	A1				
0.042"x3"x8"	L1	10'-5"	A1	15	24	27	28	9'-6"	A1	15	24	26	28	8'-8"	A1	15	23	26	27	8'-1"	A1	16	23	25	27	7'-7"	A1	16	22	25	26	7'-2"	A1	16	22	24	26
Double 3"x8"	L1/L12	15'-5"	A2	17	27	30	31	14'-3"	A3	17	26	29	31	13'-1"	A3	18	26	28	30	12'-4"	A3	18	25	28	30	11'-7"	A3	18	25	28	29	11'-0"	C	19	25	27	29
Double 2"x6.625"	L2/L12	13'-9"	A1	16	25	27	29	12'-8"	A2	17	24	27	28	11'-9"	A2	17	24	26	28	11'-0"	A3	17	23	26	27	10'-5"	A3	18	23	26	27	9'-11"	A3	18	23	25	27
16 G Steel C	L18	17'-6"	A3	18	28	31	32	15'-10"	A3	18	27	30	32	14'-3"	A3	18	26	29	31	13'-2"	B	18	26	28	30	12'-4"	C	19	25	28	30	11'-6"	C	19	25	27	29
14 G Steel C	L18	21'-0"	C	19	29	32	34	19'-2"	C	19	28	31	33	17'-4"	D	19	27	30	32	16'-1"	D	20	27	30	32	15'-0"	D	20	27	29	31	14'-1"	D	20	26	29	31
12 G Steel C	L18	26'-4"	D	20	31	34	36	25'-1"	E	21	30	33	35	24'-0"	E	22	30	33	35	23'-1"	E	22	30	33	35	22'-4"	F	23	29	33	34	21'-4"	G	23	29	32	34
Double 16 G Steel C	L18/L8	25'-5"	D	20	30	34	36	24'-2"	E	21	30	33	35	23'-2"	E	21	30	33	35	22'-4"	E	22	29	32	34	21'-7"	F	23	29	32	34	20'-11"	F	23	29	32	34
Double 14 G Steel C	L18/L8	27'-9"	E	21	31	34	36	26'-5"	E	21	31	34	36	25'-3"	E	22	30	34	36	24'-4"	F	23	30	33	35	23'-6"	G	23	30	33	35	22'-9"	G	24	29	33	35
Double 12 G Steel C	L18/L8	33'-3"	E	22	32	36	38	31'-7"	F	23	32	35	38	30'-3"	G	23	32	35	37	29'-2"	G	24	31	35	37	28'-2"	G	25	31	34	36	27'-3"	H1	25	31	34	36

Header	Detail	trib 6'	Min Post Type	Uplift Footing (in)	cubic footing "d" Constrained Footing (in) Max Post Length 8'	12'	15'	trib 6.5'	Min Post Type	Uplift Footing (in)	8'	12'	15'	trib 7'	Min Post Type	Uplift Footing (in)	8'	12'	15'	trib 7.5'	Min Post Type	Uplift Footing (in)	8'	12'	15'	trib 8'	Min Post Type	Uplift Footing (in)	8'	12'	15'
On Slab	On Slab	n/a	A1					n/a	A1					n/a	A1					n/a	A1					n/a	A1				
0.042"x3"x8"	L1	6'-8"	A1	16	22	24	25	6'-4"	A1	16	21	24	25	6'-1"	A2	17	21	23	25	5'-9"	A2	17	21	23	25	5'-6"	A2	17	21	24	25
Double 3"x8"	L1/L12	10'-5"	C	19	24	27	28	9'-11"	C	19	24	26	28	9'-6"	C	19	24	26	28	9'-2"	D	19	23	26	27	8'-9"	D	20	23	26	27
Double 2"x6.625"	L2/L12	9'-5"	A3	18	22	25	26	9'-0"	A3	18	22	25	26	8'-8"	C	19	22	24	26	8'-4"	C	19	22	24	26	8'-0"	C	19	22	24	25
16 G Steel C	L18	10'-9"	C	19	24	27	29	10'-2"	C	19	24	27	28	9'-8"	C	19	24	26	28	9'-1"	C	19	23	26	27	8'-5"	C	19	23	25	27
14 G Steel C	L18	13'-2"	E	20	26	28	30	12'-6"	E	21	25	28	30	11'-11"	E	21	25	28	29	11'-4"	E	21	25	27	29	10'-9"	E	21	24	27	29
12 G Steel C	L18	20'-1"	G	23	29	32	33	19'-2"	G	24	28	31	33	18'-4"	G	24	28	31	33	17'-6"	G	24	28	31	32	16'-9"	G	24	27	30	32
Double 16 G Steel C	L18/L8	20'-4"	G	23	29	32	34	19'-9"	G	24	28	32	33	19'-4"	G	24	28	31	33	18'-10"	G	25	28	31	33	18'-2"	G	25	28	31	33
Double 14 G Steel C	L18/L8	22'-2"	G	24	29	32	34	21'-7"	G	25	29	32	34	21'-1"	H1	25	29	32	34	20'-7"	H1	25	29	32	34	20'-2"	H1	26	29	32	34
Double 12 G Steel C	L18/L8	26'-6"	H1	26	31	34	36	25'-10"	H1	26	30	34	36	25'-2"	H1	27	30	34	35	24'-8"	H1	27	30	33	35	24'-1"	H1	27	30	33	35

Header	Detail	trib 9'	Min Post Type	Uplift Footing (in)	cubic footing "d" Constrained Footing (in) Max Post Length 8'	12'	15'	trib 10'	Min Post Type	Uplift Footing (in)	8'	12'	15'	trib 11'	Min Post Type	Uplift Footing (in)	8'	12'	15'	trib 12'	Min Post Type	Uplift Footing (in)	8'	12'	15'	trib 13'	Min Post Type	Uplift Footing (in)	8'	12'	15'
On Slab	On Slab	n/a	A1					n/a	A1					n/a	A1					n/a	A1					n/a	A1				
0.042"x3"x8"	L1	5'-1"	A1	17	22	24	26	4'-8"	A1	17	23	25	27	4'-4"	A1	17	23	26	27	4'-0"	A1	17	24	26	28	3'-9"	A1	17	24	27	28
Double 3"x8"	L1/L12	8'-2"	A1	20	23	25	27	7'-7"	A1	20	23	25	27	7'-2"	A1	20	23	26	27	6'-9"	A1	21	24	26	28	6'-5"	A1	21	24	27	28
Double 2"x6.625"	L2/L12	7'-5"	A1	19	22	24	26	7'-0"	A1	20	23	25	27	6'-7"	A1	20	23	26	27	6'-3"	A1	20	24	26	28	5'-11"	A1	20	24	27	28
16 G Steel C	L18	7'-6"	A1	19	22	25	26	6'-9"	A1	19	23	25	27	6'-2"	A1	19	23	26	27	5'-7"	A1	19	24	26	28	5'-2"	A1	19	24	27	28
14 G Steel C	L18	9'-11"	A1	21	24	26	28	9'-1"	A1	21	23	26	27	8'-4"	A1	21	23	26	27	7'-7"	A1	21	24	26	28	7'-1"	A1	21	24	27	28
12 G Steel C	L18	15'-7"	A2	25	27	30	31	14'-5"	A3	25	26	29	31	13'-7"	A3	25	26	29	30	12'-9"	A3	25	25	28	30	12'-2"	C	26	25	28	29
Double 16 G Steel C	L18/L8	17'-1"	A3	25	27	30	32	16'-1"	A3	26	27	30	32	15'-4"	C	26	27	30	31	14'-6"	C	26	26	29	31	13'-11"	D	27	26	29	31
Double 14 G Steel C	L18/L8	19'-5"	A3	26	28	31	33	18'-9"	C	27	28	31	33	18'-0"	D	28	28	31	33	17'-2"	D	28	27	30	32	16'-6"	E	28	27	30	32
Double 12 G Steel C	L18/L8	23'-2"	D	28	30	33	35	22'-5"	D	29	29	33	34	21'-8"	E	29	29	32	34	21'-1"	E	30	29	32	34	20'-6"	E	31	29	32	34

Header	Detail	trib 14'	Min Post Type	Uplift Footing (in)	cubic footing "d" Constrained Footing (in) Max Post Length 8'	12'	15'	trib 15'	Min Post Type	Uplift Footing (in)	8'	12'	15'	trib 16'	Min Post Type	Uplift Footing (in)	8'	12'	15'	trib 17'	Min Post Type	Uplift Footing (in)	8'	12'	15'	trib 18'	Min Post Type	Uplift Footing (in)	8'	12'	15'
On Slab	On Slab	n/a	A1					n/a	A1					n/a	A1					n/a	A1					n/a	A1				
0.042"x3"x8"	L1	3'-7"	A1	17	25	27	29	3'-4"	A1	18	25	28	29	3'-2"	A1	18	26	28	30	3'-0"	A1	18	26	29	30	2'-10"	A1	18	26	29	31
Double 3"x8"	L1/L12	6'-1"	A1	21	25	27	29	5'-9"	A1	21	25	28	29	5'-6"	A1	21	26	28	30	5'-3"	A1	21	26	29	30	5'-1"	A1	21	26	29	31
Double 2"x6.625"	L2/L12	5'-8"	A1	20	25	27	29	5'-5"	A1	21	25	28	29	5'-2"	A1	21	26	28	30	5'-0"	A1	21	26	29	30	4'-9"	A1	21	26	29	31
16 G Steel C	L18	4'-10"	A1	19	25	27	29	4'-6"	A1	19	25	28	29	4'-3"	A1	19	26	28	30	4'-0"	A1	19	26	29	30	3'-9"	A1	19	26	29	31
14 G Steel C	L18	6'-6"	A1	21	25	27	29	6'-1"	A1	21	25	28	29	5'-8"	A1	21	26	28	30	5'-5"	A1	21	26	29	30	5'-1"	A1	21	26	29	31
12 G Steel C	L18	11'-6"	C	26	25	27	29	11'-0"	C	26	25	28	29	10'-6"	D	26	26	28	30	10'-1"	D	26	26	29	30	9'-8"	D	26	26	29	31
Double 16 G Steel C	L18/L8	13'-4"	D	27	26	29	30	12'-10"	D	27	26	28	30	12'-4"	E	28	26	29	30	11'-11"	E	28	26	29	30	11'-6"	E	28	26	29	31
Double 14 G Steel C	L18/L8	15'-10"	E	29	27	30	32	15'-3"	E	29	27	30	31	14'-8"	E	29	27	30	32	14'-2"	E	29	27	30	32	13'-8"	E	30	27	30	32
Double 12 G Steel C	L18/L8	20'-0"	F	31	29	32	33	19'-7"	G	31	28	32	33	19'-2"	G	32	29	32	34	18'-9"	G	32	29	32	34	18'-5"	G	33	29	33	34

Registered Professional Engineer (Civil)
CERTIFICATE NO. 39702
CARL PUTNAM
Date Signed
ARIZONA U.S.A.
Expires 09/30/2024

JAN 20 2023

SECTION 2.0 POST SPACING, POST TYPE AND FOOTING SIZE FOR LATTICE COVERS

Roof Solidity: 60%

Ground Snow Load: 20 psf | **Live Load: 20 psf** | **Wind Speed: 110 MPH EXPOSURE C or 130 MPH EXPOSURE B** | **Seismic Ss= 150%** | **Seismic Design Category D** | **Structures are Attached to Existing Building**

Table 2.13a (Uplift Footing = cubic footing "d"; Constrained Footing (in) by Max Post Length 8', 12', 15')

Header	Detail	trib 3'	Min Post Type	Uplift Footing (in)	8'	12'	15'	trib 3.5'	Min Post Type	Uplift Footing (in)	8'	12'	15'	trib 4'	Min Post Type	Uplift Footing (in)	8'	12'	15'	trib 4.5'	Min Post Type	Uplift Footing (in)	8'	12'	15'	trib 5'	Min Post Type	Uplift Footing (in)	8'	12'	15'
On Slab	On Slab	11'-10"	A1					10'-2"	A1					8'-11"	A1					7'-11"	A1					7'-1"	A1				
0.042"x3"x8"	L1	10'-5"	A1	19	19	21	22	9'-6"	A1	19	19	21	23	8'-8"	A1	20	20	22	24	8'-1"	A1	20	21	23	24	7'-7"	A1	20	21	24	25
Double 3"x8"	L1/L12	15'-5"	A2	22	19	21	22	14'-3"	A3	22	19	21	23	13'-1"	A3	22	20	22	24	12'-4"	A3	23	21	23	24	11'-7"	A3	23	21	24	25
Double 2"x6.625"	L2/L12	13'-9"	A1	21	19	21	22	12'-8"	A2	21	19	21	23	11'-9"	A2	22	20	22	24	11'-0"	A3	22	21	23	24	10'-5"	A3	22	21	24	25
16 G Steel C	L18	17'-6"	A3	22	19	21	22	15'-10"	A3	23	19	21	23	14'-3"	A3	23	20	22	24	13'-2"	B	23	21	23	24	12'-4"	C	24	21	24	25
14 G Steel C	L18	21'-0"	C	24	19	21	23	19'-2"	C	24	20	22	23	17'-4"	D	25	20	22	24	16'-1"	D	25	21	23	24	15'-0"	D	25	21	24	25
12 G Steel C	L18	26'-4"	D	26	20	23	24	25'-1"	E	27	21	23	25	24'-0"	E	28	21	24	25	23'-1"	E	28	22	24	26	22'-4"	F	29	22	25	26
Double 16 G Steel C	L18/L8	25'-5"	D	25	20	22	24	24'-2"	E	26	21	23	24	23'-2"	E	27	21	24	25	22'-4"	E	28	22	24	25	21'-7"	F	29	22	24	26
Double 14 G Steel C	L18/L8	27'-9"	E	26	21	23	24	26'-5"	E	27	21	24	25	25'-3"	E	28	22	24	25	24'-4"	F	29	22	25	26	23'-6"	G	29	23	25	26
Double 12 G Steel C	L18/L8	33'-3"	E	28	22	24	25	31'-7"	F	29	22	25	26	30'-3"	G	30	23	25	27	29'-2"	G	31	23	26	27	28'-2"	G	31	24	26	28

Header	Detail	trib 5.5'	Min Post Type	Uplift Footing (in)	8'	12'	15'	trib 6'	Min Post Type	Uplift Footing (in)	8'	12'	15'	trib 6.5'	Min Post Type	Uplift Footing (in)	8'	12'	15'	trib 7'	Min Post Type	Uplift Footing (in)	8'	12'	15'	trib 7.5'	Min Post Type	Uplift Footing (in)	8'	12'	15'	trib 8'	Min Post Type	Uplift Footing (in)	8'	12'	15'
On Slab	On Slab	6'-5"	A1					5'-11"	A1					5'-5"	A1					5'-1"	A1					4'-9"	A1					4'-5"	A1				
0.042"x3"x8"	L1	7'-2"	A1	20	22	24	26	6'-8"	A1	21	22	25	26	6'-4"	A1	21	23	25	27	6'-1"	A2	21	23	26	27	5'-9"	A2	21	24	26	28	5'-6"	A2	21	24	27	28
Double 3"x8"	L1/L12	11'-0"	C	24	22	24	26	10'-5"	C	24	22	25	26	9'-11"	C	24	23	25	27	9'-6"	C	24	23	26	27	9'-2"	D	25	24	26	28	8'-9"	D	25	24	27	28
Double 2"x6.625"	L2/L12	9'-11"	A3	23	22	24	26	9'-5"	A3	23	22	25	26	9'-0"	A3	23	23	25	27	8'-8"	C	24	23	26	27	8'-4"	C	24	24	26	28	8'-0"	C	24	24	27	28
16 G Steel C	L18	11'-6"	C	24	22	24	26	10'-9"	C	24	22	25	26	10'-2"	C	24	23	25	27	9'-8"	C	24	23	26	27	9'-1"	C	25	24	26	28	8'-5"	C	24	24	27	28
14 G Steel C	L18	14'-1"	D	26	22	24	26	13'-2"	E	26	22	25	26	12'-6"	E	26	23	25	27	11'-11"	E	26	23	26	27	11'-4"	E	26	24	26	28	10'-9"	E	27	24	27	28
12 G Steel C	L18	21'-4"	G	29	23	25	26	20'-1"	G	30	23	25	27	19'-2"	G	30	23	25	27	18'-4"	G	30	23	26	27	17'-6"	G	31	24	26	28	16'-9"	G	31	24	27	28
Double 16 G Steel C	L18/L8	20'-11"	F	29	22	25	26	20'-4"	G	30	23	25	27	19'-9"	G	30	23	26	27	19'-4"	G	31	23	26	27	18'-10"	G	31	24	26	28	18'-2"	G	32	24	27	28
Double 14 G Steel C	L18/L8	22'-9"	G	30	23	25	27	22'-2"	G	31	23	26	27	21'-7"	G	31	24	26	28	21'-1"	H1	32	24	26	28	20'-7"	H1	32	24	27	28	20'-2"	H1	33	24	27	29
Double 12 G Steel C	L18/L8	27'-3"	H1	32	24	27	28	26'-6"	H1	33	24	27	29	25'-10"	H1	33	25	27	29	25'-2"	H1	34	25	28	29	24'-8"	H1	34	25	28	30	24'-1"	H1	35	26	28	30

Header	Detail	trib 8.5'	Min Post Type	Uplift Footing (in)	8'	12'	15'	trib 9'	Min Post Type	Uplift Footing (in)	8'	12'	15'	trib 10'	Min Post Type	Uplift Footing (in)	8'	12'	15'	trib 10.5'	Min Post Type	Uplift Footing (in)	8'	12'	15'	trib 11'	Min Post Type	Uplift Footing (in)	8'	12'	15'
On Slab	On Slab	4'-2"	A1					3'-11"	A1					3'-6"	A1					3'-4"	A1					3'-2"	A1				
0.042"x3"x8"	L1	5'-3"	A2	21	24	27	29	5'-1"	A2	22	25	27	29	4'-8"	A2	22	25	28	30	4'-6"	A2	22	26	28	30	4'-4"	A2	22	26	29	30
Double 3"x8"	L1/L12	8'-5"	D	25	24	27	29	8'-2"	D	25	25	27	29	7'-7"	D	25	25	28	30	7'-4"	D	26	26	28	30	7'-2"	D	26	26	29	30
Double 2"x6.625"	L2/L12	7'-8"	C	24	24	27	29	7'-5"	C	24	25	27	29	7'-0"	D	25	25	28	30	6'-9"	D	25	26	28	30	6'-7"	D	25	26	29	30
16 G Steel C	L18	7'-11"	C	25	24	27	29	7'-6"	C	25	25	27	29	6'-9"	C	24	25	28	30	6'-5"	C	25	26	28	30	6'-2"	C	25	26	29	30
14 G Steel C	L18	10'-4"	E	27	24	27	29	9'-11"	E	27	25	27	29	9'-1"	E	27	25	28	30	8'-8"	E	27	26	28	30	8'-4"	E	27	26	29	30
12 G Steel C	L18	16'-1"	G	31	24	27	29	15'-7"	G	31	25	27	29	14'-5"	G	32	25	28	30	14'-0"	H1	32	26	28	30	13'-7"	H1	32	26	29	30
Double 16 G Steel C	L18/L8	17'-7"	H1	32	24	27	29	17'-1"	H1	32	25	27	29	16'-1"	H1	33	25	28	30	15'-8"	H1	33	26	28	30	15'-4"	H1	33	26	29	30
Double 14 G Steel C	L18/L8	19'-9"	H1	33	25	27	29	19'-5"	H1	34	25	28	29	18'-9"	H1	34	25	28	30	18'-5"	H1	35	26	28	30	18'-0"	H1	35	26	29	30
Double 12 G Steel C	L18/L8	23'-8"	H1	35	26	29	30	23'-2"	H2	36	26	29	31	22'-5"	H2	37	27	29	31	22'-0"	H2	37	27	30	31	21'-8"	H2	37	27	30	32

Header	Detail	trib 11.5'	Min Post Type	Uplift Footing (in)	8'	12'	15'	trib 12'	Min Post Type	Uplift Footing (in)	8'	12'	15'	trib 13'	Min Post Type	Uplift Footing (in)	8'	12'	15'	trib 14'	Min Post Type	Uplift Footing (in)	8'	12'	15'	trib 15'	Min Post Type	Uplift Footing (in)	8'	12'	15'
On Slab	On Slab	3'-1"	A1					2'-11"	A1					2'-8"	A1					2'-6"	A1					2'-4"	A1				
0.042"x3"x8"	L1	4'-2"	A2	22	26	29	31	4'-0"	A2	22	27	29	31	3'-9"	A3	22	27	30	32	3'-7"	A3	22	28	31	32	3'-4"	A3	22	28	31	33
Double 3"x8"	L1/L12	7'-0"	E	26	26	29	31	6'-9"	E	26	27	29	31	6'-5"	E	26	27	30	32	6'-1"	E	26	28	31	32	5'-9"	E	27	28	31	33
Double 2"x6.625"	L2/L12	6'-5"	D	25	26	29	31	6'-3"	D	25	27	29	31	5'-11"	D	26	27	30	32	5'-8"	E	26	28	31	32	5'-5"	E	26	28	31	33
16 G Steel C	L18	5'-11"	C	25	26	29	31	5'-7"	C	25	27	29	31	5'-2"	C	25	27	30	32	4'-10"	C	25	28	31	32	4'-6"	C	25	28	31	33
14 G Steel C	L18	8'-0"	E	27	26	29	31	7'-7"	E	27	27	29	31	7'-1"	E	27	27	30	32	6'-6"	E	27	28	31	32	6'-1"	E	27	28	31	33
12 G Steel C	L18	13'-3"	H1	32	26	29	31	12'-9"	H1	32	27	29	31	12'-2"	H1	32	27	30	32	11'-6"	H1	33	28	31	32	11'-0"	H1	33	28	31	33
Double 16 G Steel C	L18/L8	14'-11"	H1	33	26	29	31	14'-6"	H1	34	27	29	31	13'-11"	H1	34	27	30	32	13'-4"	H1	34	28	31	32	12'-10"	H1	35	28	31	33
Double 14 G Steel C	L18/L8	17'-7"	H1	35	26	29	31	17'-2"	H2	36	27	29	31	16'-6"	H2	36	27	30	32	15'-10"	H2	36	28	31	32	15'-3"	H2	37	28	31	33
Double 12 G Steel C	L18/L8	21'-5"	H2	38	27	30	32	21'-1"	H3	38	27	30	32	20'-6"	H3	39	28	31	33	20'-0"	H3	39	28	31	33	19'-7"	H4	40	28	32	33

Amerimax Exterior Home Products
28921 US Hwy 74
Romoland, CA 92585

Carl Putnam, P. E.
3441 Ivylink Place
Lynchburg, VA 24503
carlputnam@comcast.net

Ground Snow Load: 20 psf | **Live Load: 20 psf** | **Wind Speed: 110 MPH EXPOSURE C or 130 MPH EXPOSURE B** | **Seismic Ss= 150%** | **Seismic Design Category D** | **Freestanding Structures**

Table 2.13b (Uplift Footing = cubic footing "d"; Constrained Footing (in) by Max Post Length 8', 12', 15')

Header	Detail	trib 3'	Min Post Type	Uplift Footing (in)	8'	12'	15'	trib 3.5'	Min Post Type	Uplift Footing (in)	8'	12'	15'	trib 4'	Min Post Type	Uplift Footing (in)	8'	12'	15'	trib 4.5'	Min Post Type	Uplift Footing (in)	8'	12'	15'	trib 5'	Min Post Type	Uplift Footing (in)	8'	12'	15'
On Slab	On Slab	n/a	A1					n/a	A1					n/a	A1					n/a	A1					n/a	A1				
0.042"x3"x8"	L1	10'-5"	A1	17	26	29	31	9'-6"	A1	17	25	28	30	8'-8"	A1	17	25	28	29	8'-1"	A1	17	24	27	29	7'-7"	A1	18	24	27	28
Double 3"x8"	L1/L12	15'-5"	A2	19	29	32	34	14'-3"	A3	19	28	31	33	13'-1"	A3	20	28	31	32	12'-4"	A3	20	27	30	32	11'-7"	A3	20	27	30	31
Double 2"x6.625"	L2/L12	13'-9"	A1	18	27	30	31	12'-8"	A2	19	26	29	31	11'-9"	A2	19	26	28	30	11'-0"	A3	19	25	28	30	10'-5"	A3	20	25	28	29
16 G Steel C	L18	17'-6"	A3	20	30	33	35	15'-10"	A3	20	29	32	34	14'-3"	A3	20	28	31	33	13'-2"	B	21	28	31	32	12'-4"	C	21	27	30	32
14 G Steel C	L18	21'-0"	C	21	31	34	36	19'-2"	C	21	30	34	36	17'-4"	D	22	30	33	35	16'-1"	D	22	29	32	34	15'-0"	D	22	29	32	34
12 G Steel C	L18	26'-4"	D	23	33	37	39	25'-1"	E	23	33	36	38	24'-0"	E	24	32	36	38	23'-1"	E	25	32	35	37	22'-4"	F	25	32	35	37
Double 16 G Steel C	L18/L8	25'-5"	D	22	33	36	38	24'-2"	E	23	32	36	38	23'-2"	E	24	32	35	37	22'-4"	E	25	32	35	37	21'-7"	F	25	31	35	37
Double 14 G Steel C	L18/L8	27'-9"	E	23	33	37	39	26'-5"	E	24	33	37	39	25'-3"	E	25	33	36	38	24'-4"	F	25	32	36	38	23'-6"	G	26	32	35	38
Double 12 G Steel C	L18/L8	33'-3"	E	24	35	39	41	31'-7"	F	25	35	38	40	30'-3"	G	26	34	38	40	29'-2"	G	27	34	37	40	28'-2"	G	27	33	37	39

Header	Detail	trib 5.5'	Min Post Type	Uplift Footing (in)	8'	12'	15'	trib 6'	Min Post Type	Uplift Footing (in)	8'	12'	15'	trib 6.5'	Min Post Type	Uplift Footing (in)	8'	12'	15'	trib 7'	Min Post Type	Uplift Footing (in)	8'	12'	15'	trib 7.5'	Min Post Type	Uplift Footing (in)	8'	12'	15'	trib 8'	Min Post Type	Uplift Footing (in)	8'	12'	15'
On Slab	On Slab	n/a	A1					n/a	A1					n/a	A1					n/a	A1					n/a	A1					n/a	A1				
0.042"x3"x8"	L1	7'-2"	A1	18	24	26	28	6'-8"	A1	18	23	26	27	6'-4"	A1	18	23	25	27	6'-1"	A2	18	23	25	27	5'-9"	A2	19	23	25	27	5'-6"	A2	19	23	26	27
Double 3"x8"	L1/L12	11'-0"	C	21	26	29	31	10'-5"	C	21	26	29	31	9'-11"	C	21	26	29	30	9'-6"	C	21	25	28	30	9'-2"	D	22	25	28	30	8'-9"	D	22	25	28	29
Double 2"x6.625"	L2/L12	9'-11"	A3	20	25	27	29	9'-5"	A3	20	24	27	28	9'-0"	A3	20	24	27	28	8'-8"	C	21	24	26	28	8'-4"	C	21	23	26	28	8'-0"	C	21	23	26	27
16 G Steel C	L18	11'-6"	C	21	27	30	31	10'-9"	C	21	26	29	31	10'-2"	C	21	26	29	30	9'-8"	C	21	26	28	30	9'-1"	C	22	25	28	29	8'-5"	C	21	25	27	29
14 G Steel C	L18	14'-1"	D	23	28	31	33	13'-2"	E	23	28	31	32	12'-6"	E	23	27	30	32	11'-11"	E	23	27	30	32	11'-4"	E	23	27	30	31	10'-9"	E	23	26	29	31
12 G Steel C	L18	21'-4"	G	26	31	35	37	20'-1"	G	26	31	34	36	19'-2"	G	26	30	34	36	18'-4"	G	27	30	33	35	17'-6"	G	27	30	33	35	16'-9"	G	27	29	33	34
Double 16 G Steel C	L18/L8	20'-11"	F	26	31	34	36	20'-4"	G	26	31	34	36	19'-9"	G	27	31	34	36	19'-4"	G	27	30	34	36	18'-10"	G	27	30	34	36	18'-2"	G	28	30	33	35
Double 14 G Steel C	L18/L8	22'-9"	G	26	32	35	37	22'-2"	G	27	32	35	37	21'-7"	G	27	31	35	37	21'-1"	H1	28	31	34	37	20'-7"	H1	28	31	34	36	20'-2"	H1	29	31	34	36
Double 12 G Steel C	L18/L8	27'-3"	H1	28	33	37	39	26'-6"	H1	29	33	37	39	25'-10"	H1	29	33	36	38	25'-2"	H1	30	33	36	38	24'-8"	H1	30	32	36	38	24'-1"	H1	30	32	36	38

Header	Detail	trib 8.5'	Min Post Type	Uplift Footing (in)	8'	12'	15'	trib 9'	Min Post Type	Uplift Footing (in)	8'	12'	15'	trib 10'	Min Post Type	Uplift Footing (in)	8'	12'	15'	trib 10.5'	Min Post Type	Uplift Footing (in)	8'	12'	15'	trib 11'	Min Post Type	Uplift Footing (in)	8'	12'	15'
On Slab	On Slab	n/a	A1					n/a	A1					n/a	A1					n/a	A1					n/a	A1				
0.042"x3"x8"	L1	5'-3"	A2	19	23	26	27	5'-1"	A2	19	24	26	28	4'-8"	A2	19	24	27	29	4'-6"	A2	19	25	27	29	4'-4"	A2	19	25	28	29
Double 3"x8"	L1/L12	8'-5"	D	22	25	27	29	8'-2"	D	22	24	27	29	7'-7"	D	22	24	27	29	7'-4"	D	22	25	27	29	7'-2"	D	23	25	28	29
Double 2"x6.625"	L2/L12	7'-8"	C	21	23	26	27	7'-5"	C	21	24	26	28	7'-0"	D	22	24	27	29	6'-9"	D	22	25	27	29	6'-7"	D	22	25	28	29
16 G Steel C	L18	7'-11"	C	21	24	27	29	7'-6"	C	22	24	27	28	6'-9"	C	21	24	27	29	6'-5"	C	22	25	27	29	6'-2"	C	22	25	28	29
14 G Steel C	L18	10'-4"	E	23	26	29	30	9'-11"	E	24	26	29	30	9'-1"	E	24	25	28	30	8'-8"	E	24	25	28	29	8'-4"	E	24	25	28	29
12 G Steel C	L18	16'-1"	G	27	29	32	34	15'-7"	G	27	29	32	34	14'-5"	G	28	28	31	33	14'-0"	H1	28	28	31	33	13'-7"	H1	28	28	31	33
Double 16 G Steel C	L18/L8	17'-7"	H1	28	30	33	35	17'-1"	H1	28	30	33	35	16'-1"	H1	29	29	32	34	15'-8"	H1	29	29	32	34	15'-4"	H1	29	29	32	34
Double 14 G Steel C	L18/L8	19'-9"	H1	29	31	34	36	19'-5"	H1	29	30	34	36	18'-9"	H1	30	30	33	35	18'-5"	H1	30	30	33	35	18'-0"	H1	31	30	33	35
Double 12 G Steel C	L18/L8	23'-8"	H1	31	32	36	38	23'-2"	H2	31	32	35	37	22'-5"	H2	32	32	35	37	22'-0"	H2	32	31	35	37	21'-8"	H2	33	31	35	37

Header	Detail	trib 11.5'	Min Post Type	Uplift Footing (in)	8'	12'	15'	trib 12'	Min Post Type	Uplift Footing (in)	8'	12'	15'	trib 13'	Min Post Type	Uplift Footing (in)	8'	12'	15'	trib 14'	Min Post Type	Uplift Footing (in)	8'	12'	15'	trib 15'	Min Post Type	Uplift Footing (in)	8'	12'	15'
On Slab	On Slab	n/a	A1					n/a	A1					n/a	A1					n/a	A1					n/a	A1				
0.042"x3"x8"	L1	4'-2"	A2	19	25	28	30	4'-0"	A2	19	26	28	30	3'-9"	A3	19	26	29	31	3'-7"	A3	19	27	29	31	3'-4"	A3	20	27	30	32
Double 3"x8"	L1/L12	7'-0"	E	23	25	28	30	6'-9"	E	23	26	28	30	6'-5"	E	23	26	29	31	6'-1"	E	23	27	29	31	5'-9"	E	23	27	30	32
Double 2"x6.625"	L2/L12	6'-5"	D	22	25	28	30	6'-3"	D	22	26	28	30	5'-11"	D	22	26	29	31	5'-8"	E	23	27	29	31	5'-5"	E	23	27	30	32
16 G Steel C	L18	5'-11"	C	22	25	28	30	5'-7"	C	21	26	28	30	5'-2"	C	22	26	29	31	4'-10"	C	22	27	29	31	4'-6"	C	22	27	30	32
14 G Steel C	L18	8'-0"	E	24	25	28	30	7'-7"	E	24	26	28	30	7'-1"	E	24	26	29	31	6'-6"	E	24	27	29	31	6'-1"	E	24	27	30	32
12 G Steel C	L18	13'-3"	H1	28	28	31	32	12'-9"	H1	28	27	30	32	12'-2"	H1	29	27	30	32	11'-6"	H1	29	27	30	31	11'-0"	H1	29	27	30	32
Double 16 G Steel C	L18/L8	14'-11"	H1	29	29	32	33	14'-6"	H1	29	28	31	33	13'-11"	H1	30	28	31	33	13'-4"	H1	30	28	31	33	12'-10"	H1	30	27	30	32
Double 14 G Steel C	L18/L8	17'-7"	H1	31	30	33	35	17'-2"	H2	31	30	33	35	16'-6"	H2	32	29	32	34	15'-10"	H2	32	29	32	34	15'-3"	H2	32	29	32	34
Double 12 G Steel C	L18/L8	21'-5"	H2	33	31	35	37	21'-1"	H3	33	31	35	37	20'-6"	H3	34	31	34	36	20'-0"	H3	35	31	34	36	19'-7"	H4	35	31	34	36

Ground Snow Load: 20 psf | **Live Load: 20 psf** | **Wind Speed: 105 MPH EXPOSURE C or 120 MPH EXPOSURE B** | **Seismic Ss= 150%** | **Seismic Design Category D** | **Structures are Attached to Existing Building**

Table 2.13c (Uplift Footing = cubic footing "d"; Constrained Footing (in) by Max Post Length 8', 12', 15')

Header	Detail	trib 3'	Min Post Type	Uplift Footing (in)	8'	12'	15'	trib 3.5'	Min Post Type	Uplift Footing (in)	8'	12'	15'	trib 4'	Min Post Type	Uplift Footing (in)	8'	12'	15'	trib 4.5'	Min Post Type	Uplift Footing (in)	8'	12'	15'	trib 5'	Min Post Type	Uplift Footing (in)	8'	12'	15'
On Slab	On Slab	11'-10"	A1					10'-2"	A1					8'-11"	A1					7'-11"	A1					7'-1"	A1				
0.042"x3"x8"	L1	10'-5"	A1	18	18	20	21	9'-6"	A1	19	19	21	22	8'-8"	A1	19	20	22	23	8'-1"	A1	19	20	22	24	7'-7"	A1	20	21	23	24
Double 3"x8"	L1/L12	15'-5"	A2	21	18	20	21	14'-3"	A3	21	19	21	22	13'-1"	A3	22	20	22	23	12'-4"	A3	22	20	22	24	11'-7"	A3	23	21	23	24
Double 2"x6.625"	L2/L12	13'-9"	A1	20	18	20	21	12'-8"	A2	21	19	21	22	11'-9"	A2	21	20	22	23	11'-0"	A3	21	20	22	24	10'-5"	A3	22	21	23	24
16 G Steel C	L18	17'-6"	A3	22	18	20	22	15'-10"	A3	22	19	21	22	14'-3"	A3	22	20	22	23	13'-2"	B	23	20	22	24	12'-4"	C	23	21	23	24
14 G Steel C	L18	21'-0"	C	23	19	21	23	19'-2"	C	24	20	22	23	17'-4"	D	24	20	22	23	16'-1"	D	24	20	22	24	15'-0"	D	25	21	23	24
12 G Steel C	L18	26'-4"	D	25	20	23	24	25'-1"	E	26	21	23	25	24'-0"	E	27	21	24	25	23'-1"	E	27	22	24	26	22'-4"	F	28	22	25	26
Double 16 G Steel C	L18/L8	25'-5"	D	25	20	22	24	24'-2"	E	26	21	23	24	23'-2"	E	26	21	24	25	22'-4"	E	27	22	24	25	21'-7"	F	28	22	24	26
Double 14 G Steel C	L18/L8	27'-9"	E	25	21	23	24	26'-5"	E	26	21	24	25	25'-3"	E	27	22	24	25	24'-4"	F	28	22	25	26	23'-6"	G	28	23	25	26
Double 12 G Steel C	L18/L8	33'-3"	E	27	22	24	25	31'-7"	F	28	22	25	26	30'-3"	G	29	23	25	27	29'-2"	G	30	23	26	27	28'-2"	G	30	24	26	28

Header	Detail	trib 5.5'	Min Post Type	Uplift Footing (in)	8'	12'	15'	trib 6'	Min Post Type	Uplift Footing (in)	8'	12'	15'	trib 6.5'	Min Post Type	Uplift Footing (in)	8'	12'	15'	trib 7'	Min Post Type	Uplift Footing (in)	8'	12'	15'	trib 7.5'	Min Post Type	Uplift Footing (in)	8'	12'	15'	trib 8'	Min Post Type	Uplift Footing (in)	8'	12'	15'
On Slab	On Slab	6'-5"	A1					5'-11"	A1					5'-5"	A1					5'-1"	A1					4'-9"	A1					4'-5"	A1				
0.042"x3"x8"	L1	7'-2"	A1	20	21	24	25	6'-8"	A1	20	22	24	25	6'-4"	A1	20	22	25	26	6'-1"	A2	20	23	25	26	5'-9"	A2	20	23	25	27	5'-6"	A2	21	23	26	27
Double 3"x8"	L1/L12	11'-0"	C	23	21	24	25	10'-5"	C	23	22	24	25	9'-11"	C	23	22	25	26	9'-6"	C	24	23	25	26	9'-2"	D	24	23	25	27	8'-9"	D	24	23	26	27
Double 2"x6.625"	L2/L12	9'-11"	A3	22	21	24	25	9'-5"	A3	22	22	24	25	9'-0"	A3	23	22	25	26	8'-8"	C	23	23	25	26	8'-4"	C	23	23	25	27	8'-0"	C	23	23	26	27
16 G Steel C	L18	11'-6"	C	23	21	24	25	10'-9"	C	23	22	24	25	10'-2"	C	24	22	25	26	9'-8"	C	24	23	25	26	9'-1"	C	24	23	25	27	8'-5"	C	24	23	26	27
14 G Steel C	L18	14'-1"	D	25	21	24	25	13'-2"	E	25	22	24	25	12'-6"	E	25	22	25	26	11'-11"	E	25	23	25	26	11'-4"	E	26	23	25	27	10'-9"	E	26	23	26	27
12 G Steel C	L18	21'-4"	G	28	23	25	26	20'-1"	G	29	23	25	27	19'-2"	G	29	23	25	27	18'-4"	G	29	23	26	27	17'-6"	G	30	23	26	27	16'-9"	G	30	23	26	27
Double 16 G Steel C	L18/L8	20'-11"	F	28	22	25	26	20'-4"	G	29	23	25	27	19'-9"	G	29	23	26	27	19'-4"	G	30	23	26	27	18'-10"	G	30	24	26	28	18'-2"	G	31	24	26	28
Double 14 G Steel C	L18/L8	22'-9"	G	29	23	25	27	22'-2"	G	30	23	26	27	21'-7"	G	30	24	26	28	21'-1"	H1	31	24	26	28	20'-7"	H1	31	24	27	28	20'-2"	H1	32	24	27	29
Double 12 G Steel C	L18/L8	27'-3"	H1	31	24	27	28	26'-6"	H1	32	24	27	29	25'-10"	H1	32	25	27	29	25'-2"	H1	33	25	28	29	24'-8"	H1	33	25	28	30	24'-1"	H1	34	26	28	30

Header	Detail	trib 8.5'	Min Post Type	Uplift Footing (in)	8'	12'	15'	trib 9'	Min Post Type	Uplift Footing (in)	8'	12'	15'	trib 10'	Min Post Type	Uplift Footing (in)	8'	12'	15'	trib 10.5'	Min Post Type	Uplift Footing (in)	8'	12'	15'	trib 11'	Min Post Type	Uplift Footing (in)	8'	12'	15'
On Slab	On Slab	4'-2"	A1					3'-11"	A1					3'-6"	A1					3'-4"	A1					3'-2"	A1				
0.042"x3"x8"	L1	5'-3"	A1	21	24	26	28	5'-1"	A1	21	24	27	28	4'-8"	A1	21	25	27	29	4'-6"	A1	21	25	28	29	4'-4"	A1	21	25	28	30
Double 3"x8"	L1/L12	8'-5"	A1	24	24	26	28	8'-2"	A1	24	24	27	28	7'-7"	A1	25	25	27	29	7'-4"	A1	25	25	28	29	7'-2"	A1	25	25	28	30
Double 2"x6.625"	L2/L12	7'-8"	A1	23	24	26	28	7'-5"	A1	24	24	27	28	7'-0"	A1	24	25	27	29	6'-9"	A1	24	25	28	29	6'-7"	A1	24	25	28	30
16 G Steel C	L18	7'-11"	A1	24	24	26	28	7'-6"	A1	24	24	27	28	6'-9"	A1	24	25	27	29	6'-5"	A1	24	25	28	29	6'-2"	A1	24	25	28	30
14 G Steel C	L18	10'-4"	A1	26	24	26	28	9'-11"	A1	26	24	27	28	9'-1"	A1	26	25	27	29	8'-8"	A1	26	25	28	29	8'-4"	A2	26	25	28	30
12 G Steel C	L18	16'-1"	A2	30	24	26	28	15'-7"	A3	30	24	27	28	14'-5"	A3	31	25	27	29	14'-0"	C	31	25	28	29	13'-7"	C	31	25	28	30
Double 16 G Steel C	L18/L8	17'-7"	A3	31	24	27	28	17'-1"	B	31	24	27	28	16'-1"	C	32	25	27	29	15'-8"	D	32	25	28	29	15'-4"	D	32	25	28	30
Double 14 G Steel C	L18/L8	19'-9"	B	32	25	27	29	19'-5"	C	33	25	28	29	18'-9"	D	33	25	28	30	18'-5"	E	34	26	28	30	18'-0"	E	34	26	29	30
Double 12 G Steel C	L18/L8	23'-8"	D	34	26	29	30	23'-2"	E	35	26	29	31	22'-5"	E	35	27	29	31	22'-0"	E	36	27	30	31	21'-8"	F	36	27	30	32

Header	Detail	trib 11.5'	Min Post Type	Uplift Footing (in)	8'	12'	15'	trib 12'	Min Post Type	Uplift Footing (in)	8'	12'	15'	trib 13'	Min Post Type	Uplift Footing (in)	8'	12'	15'	trib 14'	Min Post Type	Uplift Footing (in)	8'	12'	15'	trib 15'	Min Post Type	Uplift Footing (in)	8'	12'	15'
On Slab	On Slab	3'-1"	A1					2'-11"	A1					2'-8"	A1					2'-6"	A1					2'-4"	A1				
0.042"x3"x8"	L1	4'-2"	A1	21	26	28	30	4'-0"	A1	21	26	29	30	3'-9"	A1	21	26	29	31	3'-7"	A1	21	27	30	32	3'-4"	A1	22	27	30	32
Double 3"x8"	L1/L12	7'-0"	A1	25	26	28	30	6'-9"	A1	25	26	29	30	6'-5"	A2	25	26	29	31	6'-1"	A2	26	27	30	32	5'-9"	A2	26	27	30	32
Double 2"x6.625"	L2/L12	6'-5"	A1	24	26	28	30	6'-3"	A1	25	26	29	30	5'-11"	A1	25	26	29	31	5'-8"	A1	25	27	30	32	5'-5"	A1	25	27	30	32
16 G Steel C	L18	5'-11"	A1	24	26	28	30	5'-7"	A1	24	26	29	30	5'-2"	A1	24	26	29	31	4'-10"	A1	24	27	30	32	4'-6"	A1	24	27	30	32
14 G Steel C	L18	8'-0"	A2	26	26	28	30	7'-7"	A2	26	26	29	30	7'-1"	A2	26	26	29	31	6'-6"	A2	26	27	30	32	6'-1"	A2	26	27	30	32
12 G Steel C	L18	13'-3"	D	31	26	28	30	12'-9"	D	31	26	29	30	12'-2"	D	31	26	29	31	11'-6"	E	32	27	30	32	11'-0"	E	32	27	30	32
Double 16 G Steel C	L18/L8	14'-11"	E	32	26	28	30	14'-6"	E	33	26	29	30	13'-11"	E	33	26	29	31	13'-4"	E	33	27	30	32	12'-10"	E	34	27	30	32
Double 14 G Steel C	L18/L8	17'-7"	E	34	26	29	30	17'-2"	E	34	26	29	31	16'-6"	F	35	26	29	31	15'-10"	F	35	27	30	32	15'-3"	F	36	27	30	32
Double 12 G Steel C	L18/L8	21'-5"	G	36	27	30	32	21'-1"	G	37	27	30	32	20'-6"	G	37	28	31	33	20'-0"	G	38	28	31	33	19'-7"	H1	39	28	32	33

Registered Professional Engineer (Civil) CERTIFICATE NO. 39702 CARL PUTNAM Date Signed ARIZONA U.S.A. Expires 09/30/2024

SECTION 2.0 POST SPACING, POST TYPE AND FOOTING SIZE FOR LATTICE COVERS

Roof Solidity: 60%

Ground Snow Load: 20 psf **Live Load: 20 psf** **Wind Speed: 115 MPH EXPOSURE C or 130 MPH EXPOSURE B** **Seismic Ss= 150%** **Seismic Design Category D** **Structures are Attached to Existing Building**

Table 2.14a — cubic footing "d" Constrained Footing (in) Max Post Length

Header	Detail	3' trib	Min Post Type	Uplift Footing (in)	8'	12'	15'	3.5' trib	Min Post Type	Uplift Footing (in)	8'	12'	15'	4' trib	Min Post Type	Uplift Footing (in)	8'	12'	15'	4.5' trib	Min Post Type	Uplift Footing (in)	8'	12'	15'	5' trib	Min Post Type	Uplift Footing (in)	8'	12'	15'	5.5' trib	Min Post Type	Uplift Footing (in)	8'	12'	15'	6' trib	Min Post Type	Uplift Footing (in)	8'	12'	15'	6.5' trib	Min Post Type	Uplift Footing (in)	8'	12'	15'	7' trib	Min Post Type	Uplift Footing (in)	8'	12'	15'	7.5' trib	Min Post Type	Uplift Footing (in)	8'	12'	15'	8' trib	Min Post Type	Uplift Footing (in)	8'	12'	15'
On Slab	On Slab	11'-10''	A1					10'-2''	A1					8'-11''	A1					7'-11''	A1					7'-1''	A1					6'-5''	A1					5'-11''	A1					5'-5''	A1					5'-1''	A1					4'-9''	A1					4'-5''	A1				
0.042"x3"x8"	L1	10'-5''	A1	20	19	21	22	9'-6''	A1	20	20	22	23	8'-8''	A1	20	20	23	24	8'-1''	A1	21	21	23	25	7'-7''	A1	21	22	24	25	7'-2''	A1	21	22	25	26	6'-8''	A1	21	23	25	27	6'-4''	A1	21	23	26	27	6'-1''	A2	22	24	26	28	5'-9''	A2	22	24	27	28	5'-6''	A2	22	24	27	29
Double 3"x8"	L1/L12	15'-5''	A2	22	19	21	22	14'-3''	A3	23	20	22	23	13'-1''	A3	23	20	23	24	12'-4''	A3	24	21	23	25	11'-7''	A3	24	22	24	25	11'-0''	C	24	22	25	26	10'-5''	C	25	23	25	27	9'-11''	C	25	23	26	27	9'-6''	C	25	24	26	28	9'-2''	D	25	24	27	28	8'-9''	D	26	24	27	29
Double 2"x6.625"	L2/L12	13'-9''	A1	21	19	21	22	12'-8''	A2	22	20	22	23	11'-9''	A2	22	20	23	24	11'-0''	A3	23	21	23	25	10'-5''	A3	23	22	24	25	9'-11''	A3	24	22	25	26	9'-5''	A3	24	23	25	27	9'-0''	A3	24	23	26	27	8'-8''	C	24	24	26	28	8'-4''	C	25	24	27	28	8'-0''	C	25	24	27	29
16 G Steel C	L18	17'-6''	A3	23	19	21	22	15'-10''	A3	24	20	22	23	14'-3''	A3	24	20	23	24	13'-2''	B	24	21	23	25	12'-4''	C	24	22	24	25	11'-6''	C	25	22	25	26	10'-9''	C	25	23	25	27	10'-2''	C	25	23	26	27	9'-8''	C	25	24	26	28	9'-1''	C	25	24	27	28	8'-5''	C	25	24	27	29
14 G Steel C	L18	21'-0''	C	25	19	21	23	19'-2''	C	25	20	22	23	17'-4''	D	25	20	23	24	16'-1''	D	26	21	23	25	15'-0''	D	26	22	24	25	14'-1''	D	26	22	25	26	13'-2''	E	27	23	25	27	12'-6''	E	27	23	26	27	11'-11''	E	27	24	26	28	11'-4''	E	27	24	27	28	10'-9''	E	27	24	27	29
12 G Steel C	L18	26'-4''	D	27	20	23	24	25'-1''	E	28	21	23	25	24'-0''	E	28	21	24	25	23'-1''	E	29	22	24	26	22'-4''	F	30	22	25	26	21'-4''	G	30	23	25	26	20'-1''	G	31	23	25	27	19'-2''	G	31	23	26	27	18'-4''	G	31	24	26	28	17'-6''	G	32	24	27	28	16'-9''	G	32	24	27	29
Double 16 G Steel C	L18/L8	25'-5''	D	26	20	22	24	24'-2''	E	27	21	23	24	23'-2''	E	28	21	24	25	22'-4''	E	29	22	24	25	21'-7''	F	30	22	24	26	20'-11''	F	30	22	25	26	20'-4''	G	31	23	25	27	19'-9''	G	31	23	26	27	19'-4''	G	32	24	26	28	18'-10''	G	32	24	27	28	18'-2''	G	33	24	27	29
Double 14 G Steel C	L18/L8	27'-9''	E	27	21	23	24	26'-5''	E	28	21	24	25	25'-3''	E	29	22	24	25	24'-4''	F	30	22	25	26	23'-6''	G	30	23	25	26	22'-9''	G	31	23	25	27	22'-2''	G	32	23	26	27	21'-7''	G	32	24	26	28	21'-1''	H1	33	24	26	28	20'-7''	H1	33	24	27	28	20'-2''	H1	34	24	27	29
Double 12 G Steel C	L18/L8	33'-3''	E	29	22	24	25	31'-7''	F	30	22	25	26	30'-3''	G	31	23	25	27	29'-2''	G	31	23	26	27	28'-2''	G	32	24	26	28	27'-3''	H1	33	24	27	28	26'-6''	H1	34	24	27	29	25'-10''	H1	34	25	27	29	25'-2''	H1	35	25	28	29	24'-8''	H1	35	25	28	30	24'-1''	H1	36	26	28	30

Table 2.14b — cubic footing "d" Constrained Footing (in) Max Post Length

Header	Detail	3' trib	Min Post Type	Uplift Footing (in)	8'	12'	15'	3.5' trib	Min Post Type	Uplift Footing (in)	8'	12'	15'	4' trib	Min Post Type	Uplift Footing (in)	8'	12'	15'	4.5' trib	Min Post Type	Uplift Footing (in)	8'	12'	15'	5' trib	Min Post Type	Uplift Footing (in)	8'	12'	15'	5.5' trib	Min Post Type	Uplift Footing (in)	8'	12'	15'	6' trib	Min Post Type	Uplift Footing (in)	8'	12'	15'	6.5' trib	Min Post Type	Uplift Footing (in)	8'	12'	15'	7' trib	Min Post Type	Uplift Footing (in)	8'	12'	15'	7.5' trib	Min Post Type	Uplift Footing (in)	8'	12'	15'	8' trib	Min Post Type	Uplift Footing (in)	8'	12'	15'
On Slab	On Slab	n/a	A1					n/a	A1					n/a	A1					n/a	A1					n/a	A1					n/a	A1					n/a	A1					n/a	A1					n/a	A1					n/a	A1					n/a	A1				
0.042"x3"x8"	L1	10'-5''	A1	17	27	30	31	9'-6''	A1	18	26	29	31	8'-8''	A1	18	25	28	30	8'-1''	A1	18	25	28	29	7'-7''	A1	18	25	27	29	7'-2''	A1	19	24	27	28	6'-8''	A1	19	24	26	28	6'-4''	A1	19	24	26	28	6'-1''	A2	19	23	26	27	5'-9''	A2	19	23	26	27	5'-6''	A2	19	24	26	28
Double 3"x8"	L1/L12	15'-5''	A2	20	29	33	35	14'-3''	A3	20	29	32	34	13'-1''	A3	20	28	31	33	12'-4''	A3	21	28	31	33	11'-7''	A3	21	27	30	32	11'-0''	C	21	27	30	32	10'-5''	C	22	27	30	31	9'-11''	C	22	26	29	31	9'-6''	C	22	26	29	31	9'-2''	D	22	26	29	30	8'-9''	D	22	25	28	30
Double 2"x6.625"	L2/L12	13'-9''	A1	19	27	30	32	12'-8''	A2	19	27	30	31	11'-9''	A2	20	26	29	31	11'-0''	A3	20	26	29	30	10'-5''	A3	20	25	28	30	9'-11''	A3	21	25	28	29	9'-5''	A3	21	25	27	29	9'-0''	A3	21	24	27	29	8'-8''	C	21	24	27	28	8'-4''	C	22	24	27	28	8'-0''	C	22	24	26	28
16 G Steel C	L18	17'-6''	A3	20	30	34	36	15'-10''	A3	21	30	33	35	14'-3''	A3	21	29	32	34	13'-2''	B	21	28	31	33	12'-4''	C	21	28	31	33	11'-6''	C	22	27	30	32	10'-9''	C	22	27	30	31	10'-2''	C	22	26	29	31	9'-8''	C	22	26	29	30	9'-1''	C	22	26	29	30	8'-5''	C	22	25	28	30
14 G Steel C	L18	21'-0''	C	22	32	35	37	19'-2''	C	22	31	34	36	17'-4''	D	22	30	34	36	16'-1''	D	23	30	33	35	15'-0''	D	23	29	32	34	14'-1''	D	23	29	32	34	13'-2''	E	23	28	31	33	12'-6''	E	24	28	31	33	11'-11''	E	24	28	31	32	11'-4''	E	24	27	30	32	10'-9''	E	24	27	30	32
12 G Steel C	L18	26'-4''	D	23	34	37	40	25'-1''	E	24	33	37	39	24'-0''	E	25	33	36	39	23'-1''	E	26	33	36	38	22'-4''	F	26	32	36	38	21'-4''	G	27	32	35	37	20'-1''	G	27	31	35	37	19'-2''	G	27	31	34	36	18'-4''	G	27	31	34	36	17'-6''	G	28	30	34	36	16'-9''	G	28	30	33	35
Double 16 G Steel C	L18/L8	25'-5''	D	23	33	37	39	24'-2''	E	24	33	37	39	23'-2''	E	25	33	36	38	22'-4''	E	25	32	36	38	21'-7''	F	26	32	35	38	20'-11''	F	26	32	35	37	20'-4''	G	27	32	35	37	19'-9''	G	27	31	35	37	19'-4''	G	28	31	35	37	18'-10''	G	28	31	34	36	18'-2''	G	29	31	34	36
Double 14 G Steel C	L18/L8	27'-9''	E	24	34	38	40	26'-5''	E	25	34	37	40	25'-3''	E	25	33	37	39	24'-4''	F	26	33	37	39	23'-6''	G	27	33	36	38	22'-9''	G	27	32	36	38	22'-2''	G	28	32	36	38	21'-7''	G	28	32	36	38	21'-1''	H1	29	32	35	37	20'-7''	H1	29	32	35	37	20'-2''	H1	30	31	35	37
Double 12 G Steel C	L18/L8	33'-3''	E	25	36	40	42	31'-7''	F	26	35	39	41	30'-3''	G	27	35	39	41	29'-2''	G	28	35	38	41	28'-2''	G	28	34	38	40	27'-3''	H1	29	34	38	40	26'-6''	H1	29	34	37	40	25'-10''	H1	30	34	37	39	25'-2''	H1	31	33	37	39	24'-8''	H1	31	33	37	39	24'-1''	H1	31	33	37	39

Amerimax Exterior Home Products
28921 US Hwy 74
Romoland, CA 92585

Carl Putnam, P. E.
3441 Ivylink Place
Lynchburg, VA 24503
carlputnam@comcast.net

Ground Snow Load: 20 psf **Live Load: 20 psf** **Wind Speed: 115 MPH EXPOSURE C or 130 MPH EXPOSURE B** **Seismic Ss= 150%** **Seismic Design Category D** **Freestanding Structures**

Table 2.14c — cubic footing "d" Constrained Footing (in) Max Post Length

Header	Detail	3' trib	Min Post Type	Uplift Footing (in)	8'	12'	15'	3.5' trib	Min Post Type	Uplift Footing (in)	8'	12'	15'	4' trib	Min Post Type	Uplift Footing (in)	8'	12'	15'	4.5' trib	Min Post Type	Uplift Footing (in)	8'	12'	15'	5' trib	Min Post Type	Uplift Footing (in)	8'	12'	15'	5.5' trib	Min Post Type	Uplift Footing (in)	8'	12'	15'	6' trib	Min Post Type	Uplift Footing (in)	8'	12'	15'	6.5' trib	Min Post Type	Uplift Footing (in)	8'	12'	15'	7' trib	Min Post Type	Uplift Footing (in)	8'	12'	15'	7.5' trib	Min Post Type	Uplift Footing (in)	8'	12'	15'	8' trib	Min Post Type	Uplift Footing (in)	8'	12'	15'
On Slab	On Slab	n/a	A1					n/a	A1					n/a	A1					n/a	A1					n/a	A1					n/a	A1					n/a	A1					n/a	A1					n/a	A1					n/a	A1					n/a	A1				
0.042"x3"x8"	L1	10'-5''	A1	16	25	28	29	9'-6''	A1	16	25	28	29	8'-8''	A1	17	24	27	28	8'-1''	A1	17	24	26	28	7'-7''	A1	17	23	26	28	7'-2''	A1	17	23	26	27	6'-8''	A1	17	23	25	27	6'-4''	A1	18	22	25	26	6'-1''	A2	18	22	25	26	5'-9''	A2	18	22	25	26	5'-6''	A2	18	23	25	26
Double 3"x8"	L1/L12	15'-5''	A2	18	28	31	33	14'-3''	A3	19	28	31	32	13'-1''	A3	19	27	30	32	12'-4''	A3	19	27	29	31	11'-7''	A3	20	26	29	31	11'-0''	C	20	26	29	30	10'-5''	C	20	25	28	30	9'-11''	C	20	25	28	29	9'-6''	C	21	25	28	29	9'-2''	D	21	25	27	29	8'-9''	D	21	24	27	29
Double 2"x6.625"	L2/L12	13'-9''	A1	18	26	29	31	12'-8''	A2	18	25	28	29	11'-9''	A2	19	25	28	29	11'-0''	A3	19	25	27	29	10'-5''	A3	19	24	27	28	9'-11''	A3	19	24	27	28	9'-5''	A3	20	24	26	28	9'-0''	A3	20	23	26	27	8'-8''	C	20	23	26	27	8'-4''	C	20	23	25	27	8'-0''	C	20	23	25	27
16 G Steel C	L18	17'-6''	A3	19	29	32	34	15'-10''	A3	19	28	31	33	14'-3''	A3	20	28	31	32	13'-2''	B	20	27	30	32	12'-4''	C	20	27	29	31	11'-6''	C	20	26	29	31	10'-9''	C	20	26	28	30	10'-2''	C	21	25	28	30	9'-8''	C	21	25	28	29	9'-1''	C	21	25	27	29	8'-5''	C	21	24	27	28
14 G Steel C	L18	21'-0''	C	20	30	34	36	19'-2''	C	21	30	33	35	17'-4''	D	21	29	32	34	16'-1''	D	21	28	31	33	15'-0''	D	22	28	31	33	14'-1''	D	22	27	30	32	13'-2''	E	22	27	30	32	12'-6''	E	22	27	30	31	11'-11''	E	22	26	29	31	11'-4''	E	22	26	29	30	10'-9''	E	23	26	28	30
12 G Steel C	L18	26'-4''	D	22	32	36	38	25'-1''	E	23	32	35	37	24'-0''	E	23	31	35	37	23'-1''	E	24	31	34	37	22'-4''	F	25	31	34	36	21'-4''	G	25	31	34	36	20'-1''	G	25	30	33	35	19'-2''	G	25	30	33	35	18'-4''	G	26	29	33	34	17'-6''	G	26	29	32	34	16'-9''	G	26	29	32	34
Double 16 G Steel C	L18/L8	25'-5''	D	22	32	35	37	24'-2''	E	22	31	35	37	23'-2''	E	23	31	35	37	22'-4''	E	24	31	34	36	21'-7''	F	24	31	34	36	20'-11''	F	25	30	34	36	20'-4''	G	25	30	33	35	19'-9''	G	26	30	33	35	19'-4''	G	26	30	33	35	18'-10''	G	27	30	33	35	18'-2''	G	27	29	32	34
Double 14 G Steel C	L18/L8	27'-9''	E	22	33	36	38	26'-5''	E	23	32	36	38	25'-3''	E	24	32	35	37	24'-4''	F	24	32	35	37	23'-6''	G	25	31	35	37	22'-9''	G	26	31	34	36	22'-2''	G	26	31	34	36	21'-7''	G	26	31	34	36	21'-1''	H1	27	30	34	36	20'-7''	H1	27	30	34	35	20'-2''	H1	28	30	33	35
Double 12 G Steel C	L18/L8	33'-3''	E	24	34	38	40	31'-7''	F	24	34	37	40	30'-3''	G	25	33	37	39	29'-2''	G	26	33	37	39	28'-2''	G	27	33	36	38	27'-3''	H1	27	32	36	38	26'-6''	H1	28	32	36	38	25'-10''	H1	28	32	35	38	25'-2''	H1	29	32	35	37	24'-8''	H1	29	32	35	37	24'-1''	H1	29	31	35	37

Table 2.14d — cubic footing "d" Constrained Footing (in) Max Post Length

Header	Detail	3' trib	Min Post Type	Uplift Footing (in)	8'	12'	15'	3.5' trib	Min Post Type	Uplift Footing (in)	8'	12'	15'	4' trib	Min Post Type	Uplift Footing (in)	8'	12'	15'	4.5' trib	Min Post Type	Uplift Footing (in)	8'	12'	15'	5' trib	Min Post Type	Uplift Footing (in)	8'	12'	15'	5.5' trib	Min Post Type	Uplift Footing (in)	8'	12'	15'	6' trib	Min Post Type	Uplift Footing (in)	8'	12'	15'	6.5' trib	Min Post Type	Uplift Footing (in)	8'	12'	15'	7' trib	Min Post Type	Uplift Footing (in)	8'	12'	15'	7.5' trib	Min Post Type	Uplift Footing (in)	8'	12'	15'	8' trib	Min Post Type	Uplift Footing (in)	8'	12'	15'
On Slab	On Slab	n/a	A1					n/a	A1					n/a	A1					n/a	A1					n/a	A1					n/a	A1					n/a	A1					n/a	A1					n/a	A1					n/a	A1					n/a	A1				
0.042"x3"x8"	L1	5'-3''	A1	18	23	25	27	5'-1''	A1	18	23	26	27	4'-8''	A1	18	24	26	28	4'-6''	A1	18	24	27	28	4'-4''	A1	19	24	27	29	4'-2''	A1	19	25	27	29	4'-0''	A1	19	25	28	29	3'-9''	A1	19	25	28	30	3'-7''	A1	19	26	29	30	3'-4''	A1	19	26	29	31	3'-2''	A1	19	26	29	31
Double 3"x8"	L1/L12	8'-5''	A1	21	24	27	28	8'-2''	A1	21	24	26	28	7'-7''	A1	22	24	26	28	7'-4''	A1	22	24	27	28	7'-2''	A1	22	24	27	29	7'-0''	A1	22	25	27	29	6'-9''	A1	22	25	28	29	6'-5''	A2	22	25	28	30	6'-1''	A2	22	26	29	30	5'-9''	A2	22	26	29	31	5'-5''	A2	22	26	29	31
Double 2"x6.625"	L2/L12	7'-8''	A1	21	23	25	27	7'-5''	A1	21	23	26	27	7'-0''	A1	21	24	26	28	6'-9''	A1	21	24	27	28	6'-7''	A1	21	24	27	29	6'-5''	A1	21	25	27	29	6'-3''	A1	22	25	28	29	5'-11''	A1	22	25	28	30	5'-8''	A1	22	26	29	30	5'-5''	A1	22	26	29	31	5'-2''	A1	22	26	29	31
16 G Steel C	L18	7'-11''	A1	24	26	28	29	7'-6''	A1	23	26	27	29	6'-9''	A1	21	24	26	28	6'-5''	A1	23	24	27	28	6'-2''	A1	21	24	27	29	5'-11''	A1	21	25	27	29	5'-7''	A1	21	25	28	29	5'-2''	A1	21	25	28	30	4'-10''	A1	21	26	29	30	4'-6''	A1	21	26	29	31	4'-3''	A1	21	26	29	31
14 G Steel C	L18	10'-4''	A1	23	25	28	30	9'-11''	A1	23	25	28	29	9'-1''	A1	23	25	27	29	8'-8''	A1	23	24	27	29	8'-4''	A2	23	24	27	29	8'-0''	A2	23	25	27	29	7'-7''	A2	23	25	28	29	7'-1''	A2	23	25	28	30	6'-6''	A2	23	26	29	30	6'-1''	A2	23	26	29	31	5'-8''	A2	23	26	29	31
12 G Steel C	L18	16'-1''	G	28	30	33	35	15'-7''	G	28	29	33	35	14'-5''	G	29	29	32	34	14'-0''	H1	29	29	32	34	13'-7''	H1	29	28	32	33	13'-3''	H1	29	28	31	33	12'-9''	H1	29	28	31	33	12'-2''	H1	29	28	31	32	11'-6''	H1	30	27	30	32	11'-0''	H1	30	28	31	32	10'-5''	H1	30	28	31	32
Double 16 G Steel C	L18/L8	17'-7''	H1	29	30	34	36	17'-1''	H1	29	30	33	35	16'-1''	H1	30	30	33	35	15'-8''	H1	30	30	33	35	15'-4''	H1	30	29	33	34	14'-11''	H1	30	29	32	34	14'-6''	H1	30	29	32	34	13'-11''	H1	31	29	32	34	13'-4''	H1	31	28	31	33	12'-10''	H1	31	28	31	33	12'-3''	H1	31	28	31	33
Double 14 G Steel C	L18/L8	19'-9''	H1	30	31	35	37	19'-5''	H1	30	31	35	37	18'-9''	H1	31	31	34	36	18'-5''	H1	31	31	34	36	18'-0''	H1	32	31	34	36	17'-7''	H1	32	30	34	36	17'-2''	H2	32	30	34	35	16'-6''	H2	33	30	33	35	15'-10''	H2	33	30	33	35	15'-3''	H2	33	29	33	34	14'-8''	H2	33	29	33	34
Double 12 G Steel C	L18/L8	23'-8''	H1	32	33	36	38	23'-2''	H2	32	33	36	38	22'-5''	H2	33	32	36	38	22'-0''	H2	33	32	36	38	21'-8''	H2	34	32	36	38	21'-5''	H2	34	32	35	37	21'-1''	H3	34	32	35	37	20'-6''	H3	35	32	35	37	20'-0''	H3	36	31	35	37	19'-7''	H4	36	31	35	37

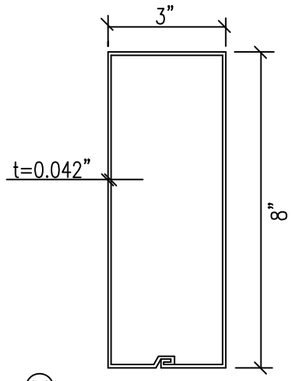

L1 HEADER
(3004–H34 ALUM. ALLOY)

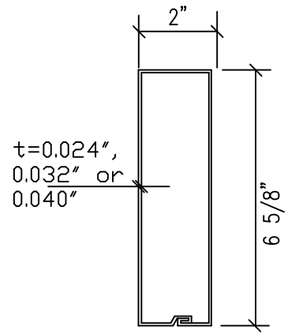

L2 RAFTER & SIDEPLATES
(3004–H34 ALUM. ALLOY)

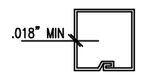

L3

LATTICE TUBES
1.5"x1.5" @3' o/c
2"x2" @4' o/c
3"x3" @6' o/c DETAIL L4
2"X3" @5' o/c

LATTICE
3105 H24
ALUM ALLOY

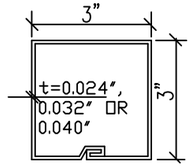

L4 POST/RAFTER/LATTICE TUBE
(3004–H34 ALUM. ALLOY)

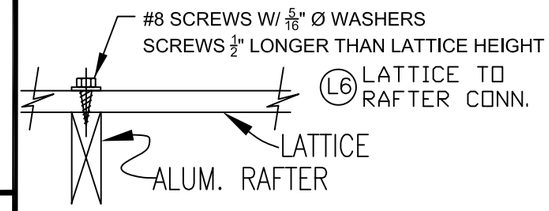

L6 LATTICE TO RAFTER CONN.

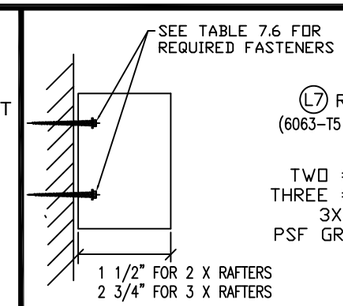

L7 RAFTER HANGER
(6063–T5 ALUM. ALLOY, 't'= 0.078")

TWO #8 SMS EACH SIDE
THREE #8 SMS EACH SIDE
3X8 RAFTERS IN 60+
PSF GROUND SNOW LOADS

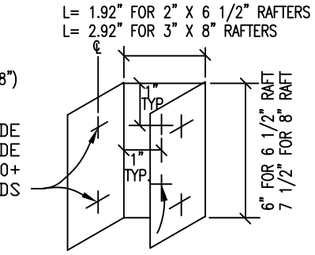

	Required # of #14 Self Drilling Screws (# of 1/4" Bolts)									
Beam	4 (4)	5 (4)	6 (5)	7 (6)	8 (7)	10 (4)	12 (5)	14 (6)	16 (7)	18 (8)
Type	**BREAKPOINT Span**									
All C Beams "On Slab"	All Spans									
16G Steel 3x8	All Spans									
14G Steel 3x8	All Spans									
12G Steel 3x8	28'-8"	20'-1"	15'-5"	10'-7"	All Spans					
Double 16G Steel 3x8						All Spans				
Double 14G Steel 3x8						15'-8"	All Spans			
Double 12G Steel 3x8						28'-6"	22'-11"	19'-0"	16'-5"	All Spans

Spans in Tables of Section 2.0 GREATER than the BREAKPOINT span require the number of screw/bolts shown.
Spans in Tables of Section 2.0 LESS than the BREAKPOINT span require a LARGER anount of screws/bolts because the load will be heavier (higher live/snow/wind or trib width)

EXAMPLE Table 2.1a (10 psf Live, 95 mph Exp B) for a 4' trib and a 12G Steel C allows a maximum post spacing of 38'-9". From the table above this is above 28'-8" and will require four #14 Self Drilling Screws or four 1/4" steel bolts. If the user desires a smaller span because of practical matters (site conditions, aesthetics etc) only four screws or bolts would be required. Using the same load conditions but the trib is 18', the allowable span is now 15'-0" and would require seven #14 screws or 6 bolts as the allowable span is under 15'-5" and over 10'-7".

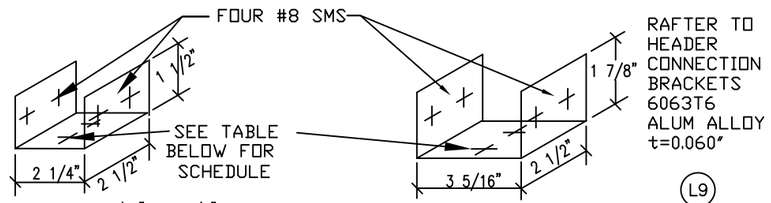

L9

Wind Speed	t (in)	Header	Allowable Trib Width No. of #8 Screws 2	3	4	5
110 MPH EXP C	0.040	Double 2x6	9'	14'	18'	
	0.042	0.042"x3"x8"	5'	7'	9'	12'
	0.042	Double 3x8	9'	14'	18'	
115 MPH EXP C	0.040	Double 2x6	8'	12'	16'	18'
	0.042	0.042"x3"x8"	4'	6'	9'	11'
	0.042	Double 3x8	9'	13'	17'	18'
			#14 Screws			
130 MPH EXP C	0.040	Double 2x6	10'	15'	18'	
	0.042	0.042"x3"x8"	5'	8'	10'	13'
	0.042	Double 3x8	10'	15'	18'	18'
150 MPH EXP C	16G min	8" Steel C	10'	14'	18'	
	16G min	Double Steel C	18'			
170 MPH EXP C	16G min	8" Steel C	7'	11'	15'	18'
	16G min	Double Steel C	15'	18'		

DOUBLE HEADERS USE ONE BRACKET PER HEADER

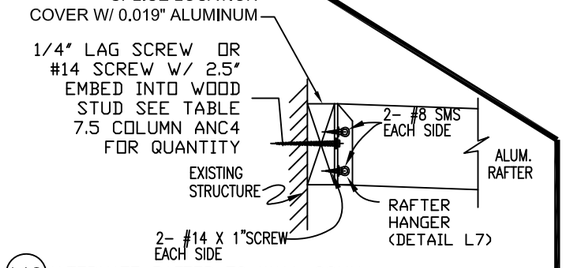

L10 ALTERNATE RAFTER TO WALL CONN.

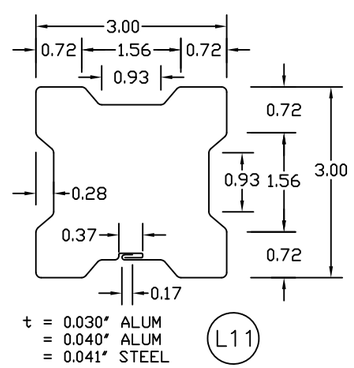

L11

3" ALTERNATE POST
(3105 H25 ALUM. ALLOY OR
A–653 Fy=40 KSI STEEL)

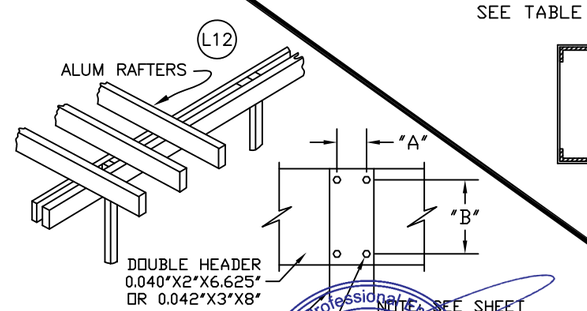

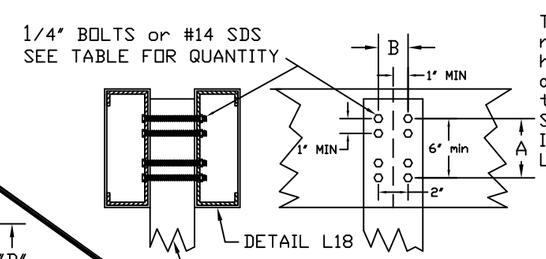

L8

Tables L1 and L2 may require "A" and "B" to have larger values and/or more screws than shown here. See General Instructions for Lattice Covers

DOUBLE OR SINGLE 3"X8" STEEL C BEAM.
BOLT LAYOUT FOR SPLICED AND
NON-SPLICE ATTACHMENT

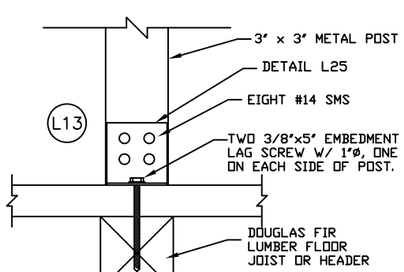

L13

ATTACHED STRUCTURE POST
TO DECK FLOOR JOIST

SEE GENERAL NOTE #19 AND
LATTICE NOTE #3
UNITS MUST COMPY WITH
TABLES L1 AND L2 ON SHEET
Misc5

MAX WIND SPEED
IS 130 mph
EXPOSURE C

Registered Professional Engineer
CERTIFICATE OF AUTHORITY
39702
CARL PUTNAM
Date Signed
ARIZONA U.S.A.
Expires 09/30/2024

JAN 20 2023

Amerimax
EXTERIOR HOME PRODUCTS

28921 US Hwy 74
Romoland, CA 92585

DRAWN BY: BEJ/CP	TYPE:
SCALE: NTS	Component Parts & Connection Details For Patio & Commercial Lattice Structures
DATE:	FILE#: LT01–2021 — SHEET: 1 of 4

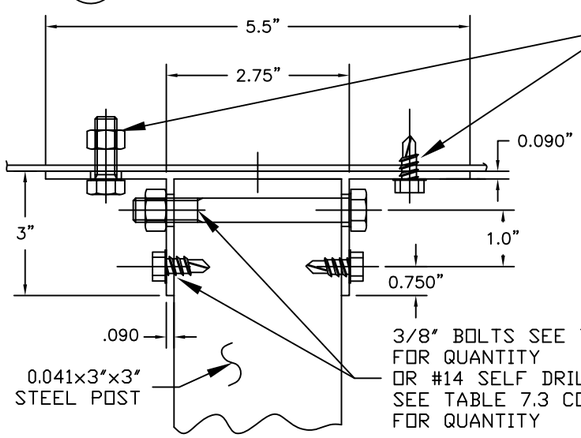

3/8" BOLTS W/ 1" DIA.
x 3/32" THK. STL. WASHER
TO 8" STEEL "C" BEAM
SEE TABLE 7.4 COLUMN "N"
FOR QUANTITY
FOR #14 SELF DRILLING
SCREWS SEE TABLE 7.4
COLUMN "O".

ALTERNATE 3" SQ POST CONNECTOR
BRACKET (6063T6 ALUM)
IF DETAIL L29 IS NOT USED
ATTACH SIDE PLATES AS PER
DETAIL L26

3/8" BOLTS SEE TABLE 7.3 COLUMN "J"
FOR QUANTITY
OR #14 SELF DRILLING SCREWS
SEE TABLE 7.3 COLUMN "I"
FOR QUANTITY

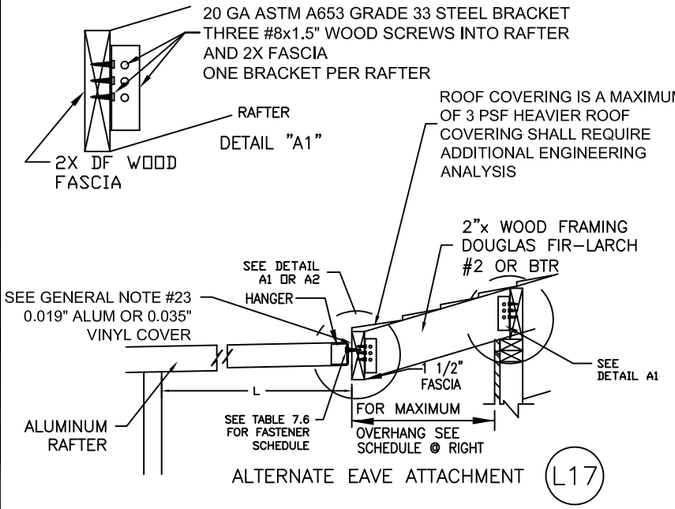

ALTERNATE EAVE ATTACHMENT

Live Snow	RAFTER SIZE	MAX DISTANCE TO FIRST ROW OF POSTS "L" EAVE OVERHANG 6"	12"	18"	24"	30"	Number of #14 Screws
10 psf 130 mph Exp C	**2x4**	26'-0'	18'-10'	10'-11'	6'-5'	3'-4'	2
	2x6	26'-0'	26'-0'	26'-0'	21'-8'	15'-6'	
	2x8	26'-0'	26'-0'	26'-0'	26'-0'	26'-0'	
20 psf 130 mph Exp C	**2x4**	19'-0'	9'-10'	5'-8'	3'-4'	1'-9'	3
	2x6	19'-0'	19'-0'	16'-5'	11'-4'	8'-1'	
	2x8	19'-0'	19'-0'	19'-0'	19'-0'	16'-1'	
25 psf 130 mph Exp C	**2x4**	18'-0'	9'-4'	5'-4'	3'-1'	1'-6'	3
	2x6	18'-0'	18'-0'	15'-7'	10'-9'	7'-8'	
	2x8	18'-0'	18'-0'	18'-0'	18'-0'	15'-3'	
30 psf 130 mph Exp C	**2x4**	17'-0'	7'-8'	4'-3'	2'-3'	0'-11'	4
	2x6	17'-0'	17'-0'	12'-10'	8'-8'	6'-0'	
	2x8	17'-0'	17'-0'	17'-0'	16'-8'	12'-4'	
36 psf 130 mph Exp C	**2x4**	14'-3'	6'-4'	3'-4'	1'-7'	0'-4'	4
	2x6	16'-0'	16'-0'	10'-7'	7'-0'	4'-8'	
	2x8	16'-0'	16'-0'	16'-0'	13'-9'	10'-1'	
42 psf 130 mph Exp C	**2x4**	12'-1'	5'-3'	2'-8'	1'-1'	0'-0'	4
	2x6	14'-12'	14'-12'	8'-10'	5'-9'	3'-8'	
	2x8	14'-12'	14'-12'	14'-12'	11'-6'	8'-3'	
50 psf 130 mph Exp C	**2x4**	10'-2'	4'-3'	2'-0'	0'-7'	0'-0'	5
	2x6	13'-0'	12'-1'	7'-3'	4'-6'	2'-8'	
	2x8	13'-0'	13'-0'	13'-0'	9'-4'	6'-6'	
60 psf 130 mph Exp C	**2x4**	8'-5'	3'-5'	1'-5'	0'-2'	0'-0'	5
	2x6	12'-0'	10'-0'	5'-9'	3'-5'	1'-10'	
	2x8	12'-0'	12'-0'	11'-2'	7'-6'	5'-1'	

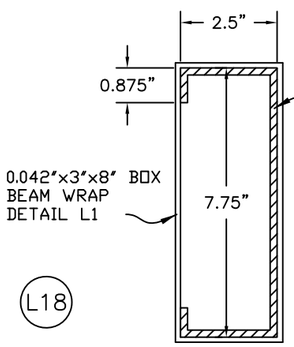

3"x8" 12 (t=0.105")
14 (t=0.070") OR
16 GAUGE (t=0.059")
STEEL C BEAM
Fy= 50 KSI

12, 14 and 16 GA 3"x8" STEEL C
BEAM W/ 0.042"X3"X8" ALUM WRAP

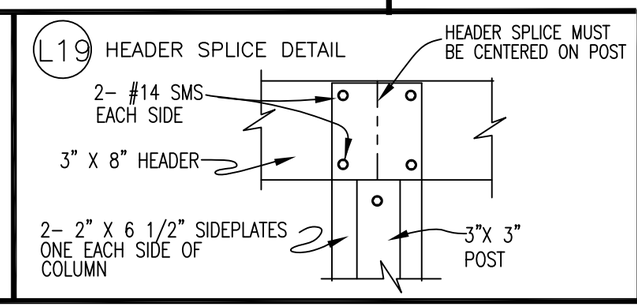

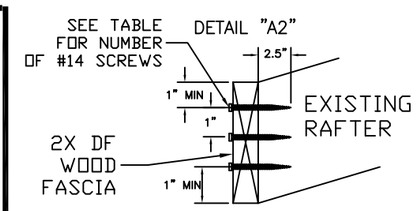

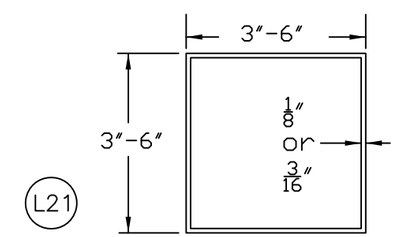

3", 4", 5" OR 6" ASTM A500
GRADE B STEEL POST
SEE GENERAL NOTE #9 FOR
CORROSION PROTECTION

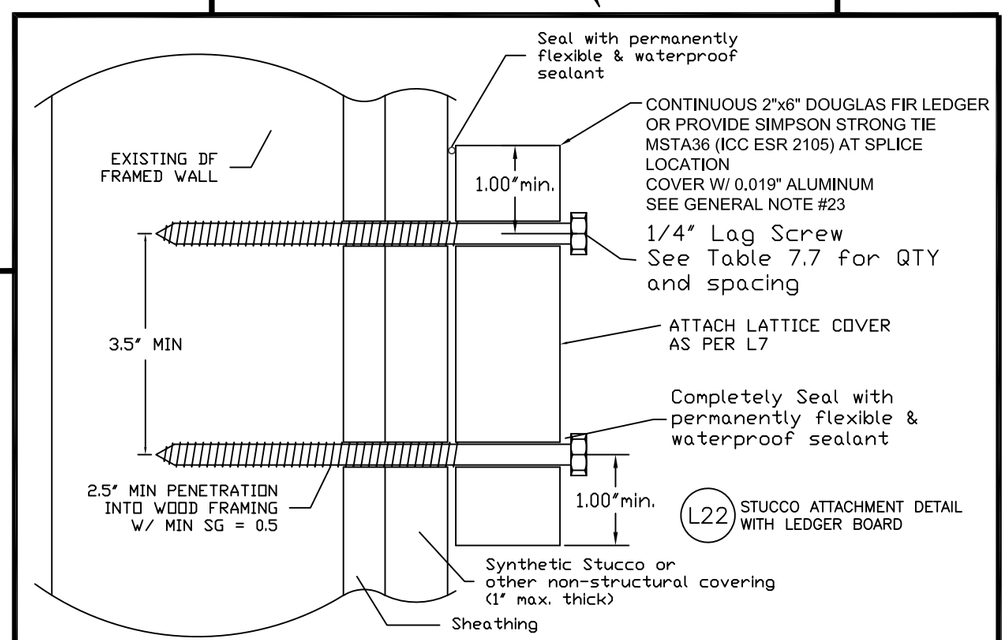

SEE ALLOWABLE DISTANCE TO FIRST
ROW OF POSTS IN TABLE 7.7

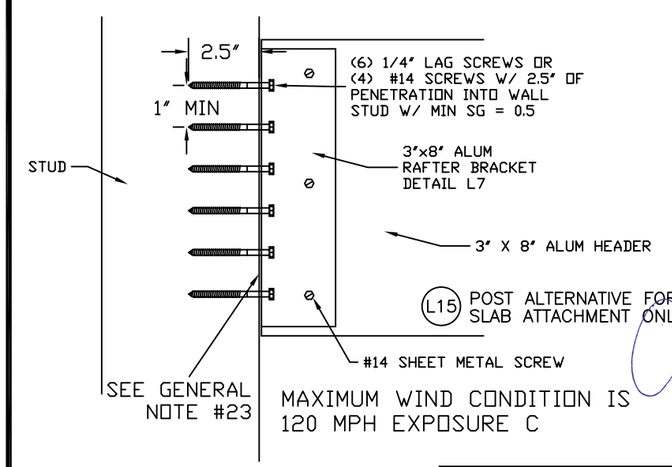

MAXIMUM WIND CONDITION IS
120 MPH EXPOSURE C

Registered Professional Engineer (Civil)
CERTIFICATE NO.
39702
CARL PUTNAM
Date Signed
ARIZONA U.S.A.
Expires 09/30/2024

JAN 20 2023

Amerimax
EXTERIOR HOME PRODUCTS

28921 US Hwy 74
Romoland, CA 92585

DRAWN BY: BEJ/CP	TYPE:
SCALE: NTS	Component Parts & Connection Details For Patio & Commercial Lattice Structures
DATE:	FILE#: LT02-2021 — SHEET: 2 of 4

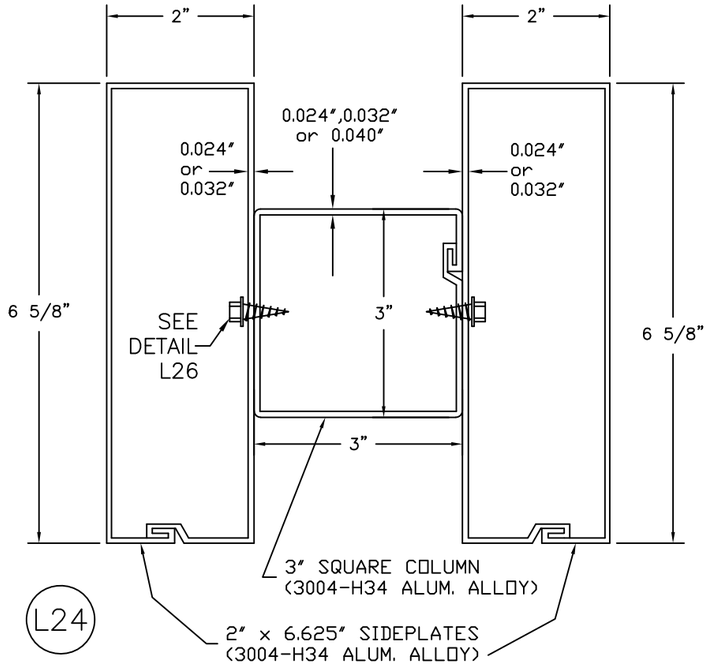

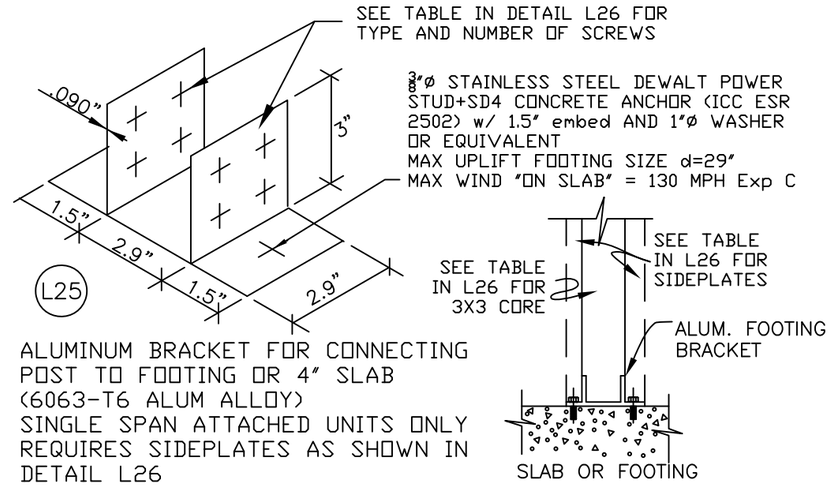

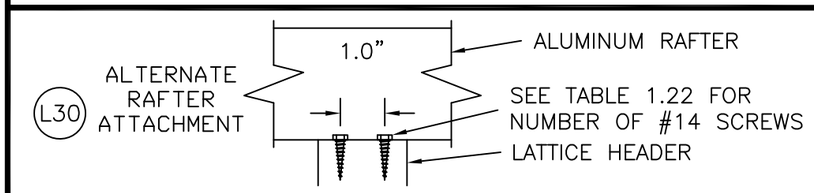

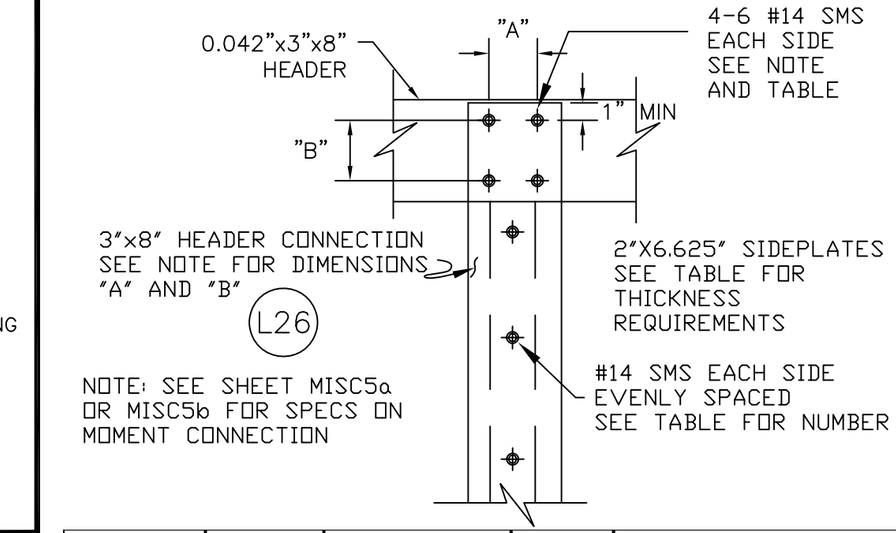

FOOTING d (in)	Number of #14 SMS	Side Plates	3"x3" Core	Maximim Wind Condition for "On Slab" Attachment
26	8	0.024"x2"x6.625"	0.024"	140 mph Exp B (Lattice) 115 mph Exp C (Lattice)
29	8	0.032"x2"x6.625"	0.032"	130 mph Exp C (Lattice)
30	12	0.024"x2"x6.625"	0.024"	130 mph Exp C (Lattice)

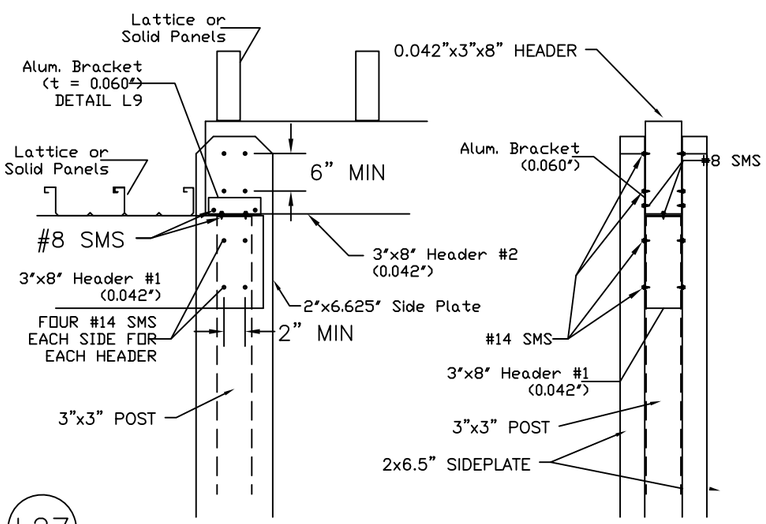

ALTERNATIVE SPLICE FOR ATTACHED UNITS

USE SAME TABLE IN L26 FOR FOOTING SIZES.
USE TABLE IN N22 FOR "ON SLAB"
CONNECTIONS

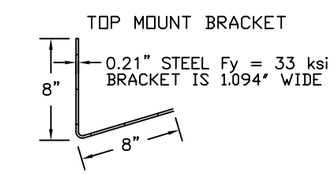

Live Load (psf)	Wind Speed and Exposure	MAX "L" FOR TOP OR SIDE MOUNT 16" o/c	24"o/c
10	130 mph Exp C	21'-8"	14'-5"
20	130 mph Exp C	11'-4"	7'-6"

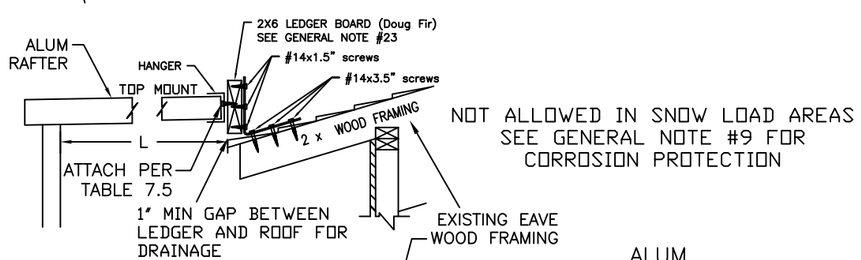

ALL HOUSE PENETRATIONS
MUST BE COMPLETELY AND
PERMANENTLY SEALED

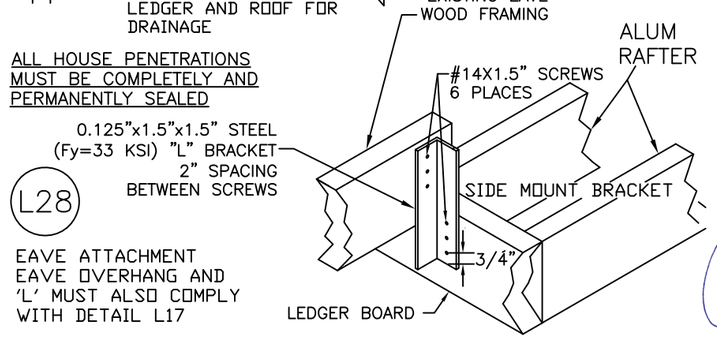

EAVE ATTACHMENT
EAVE OVERHANG AND
'L' MUST ALSO COMPLY
WITH DETAIL L17

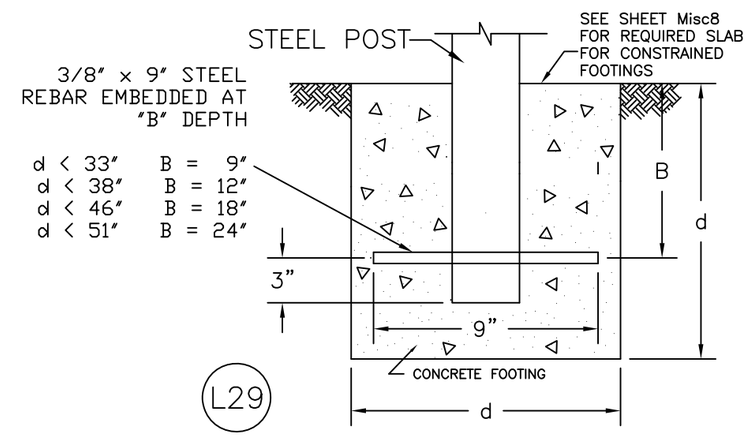

FREESTANDING OR ATTACHED STRUCTURE
COLUMN TO FOOTING CONNECTION DETAIL

Registered Professional Engineer (Civil)
CERTIFICATE NO.
39702
CARL PUTNAM
Date Signed
ARIZONA U.S.A.
Expires 09/30/2024

JAN 20 2023

Amerimax
EXTERIOR HOME PRODUCTS
28921 US Hwy 74
Romoland, CA 92585

DRAWN BY: BEJ/CP	TYPE:
SCALE: NTS	Component Parts & Connection Details For Patio & Commercial Lattice Structures
DATE:	FILE#: LT03-2021 — SHEET: 3 of 4

L31 UNDERHUNG DOUBLE RAFTERS

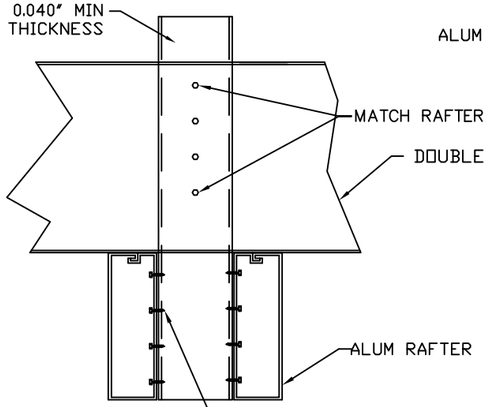

ALL SCREW REQUIREMENTS ARE PER RAFTER
THREE #14 SMS FOR 10 PSF LIVE/GSL
FOUR #14 SMS FOR 36 PSF GSL
FIVE #14 SMS FOR 60 PSF GSL
*GSL = GROUND SNOW LOAD
MAX WIND LOAD IS 170 MPH EXP C

L32 DOUBLE RAFTERS

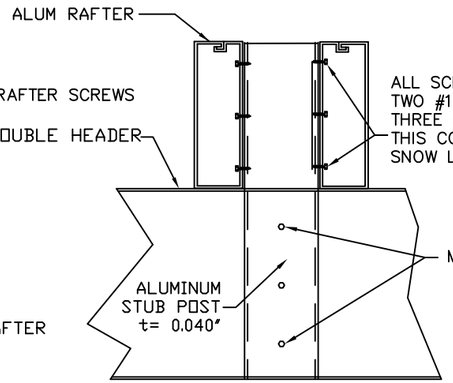

ALL SCREWS REQUIREMENTS ARE PER RAFTER
TWO #14 SMS UP TO 150 MPH EXP C
THREE #14 SMS UP TO 170 MPH EXP C
THIS CONNECTION DOES NOT DEPEND ON SNOW LOADS

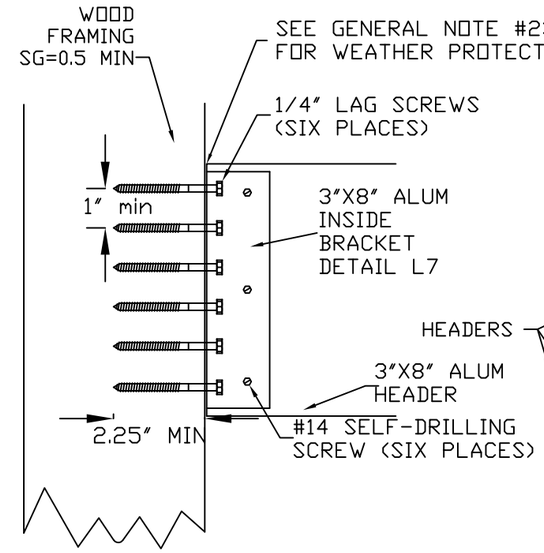

HEADER ATTACHMENT TO WALL L34

MAY NOT ATTACH HEADER OVER WINDOW OR OTHER WALL OPENING

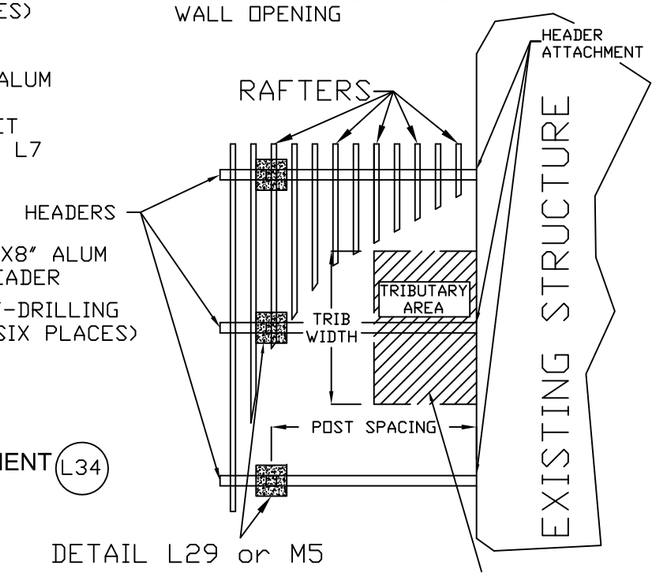

DETAIL L29 or M5

MAX TRIBUTARY AREA
79 SQ. FT FOR 10 PSF
62 SQ FT FOR 15 PSF GSL*
41 SQ FT FOR 20 PSF
47 SQ FT FOR 25 PSF GSL*
40 SQ FT FOR 30 PSF GSL*
*GROUND SNOW LOAD

CHECK ALLOWABLE POST SPACING FOR HEADER IN TABLES

L33 CRIPPLE RESISTANT CONNECTION FOR RAFTERS

ALUMINUM RAFTER DETAIL L1 OR L2

DOUBLE RAFTERS USING THIS DETAIL MAY BE SPACED AS PER TABLES 1.13-1.20 OR SINGLE RAFTERS MAY USE HALF OF THAT SPACING (ex: 48" FOR DOUBLE, 24" FOR SINGLE)

RAFTER HANGING BRACKET DETAIL L7

(2) #8 SCREWS FOR ALL GROUND SNOW LOADS UP TO 42 PSF
(4) #8 SCREWS FOR 42 to 60 PSF GROUND SNOW LOAD

3X8 HEADER

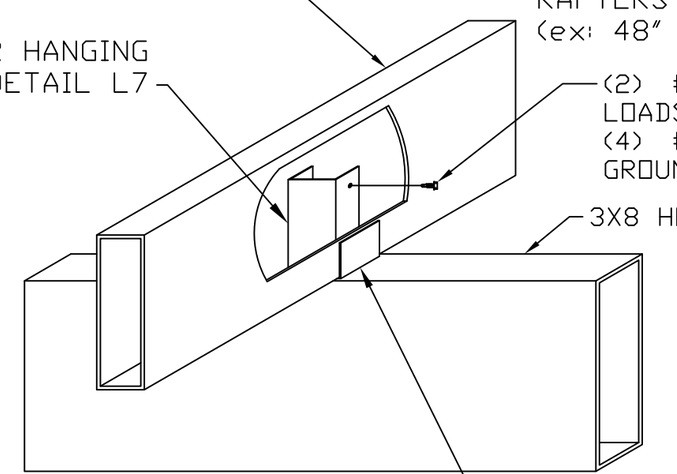

SECTIONED VIEW

RAFTER MOUNTING BRACKET ATTACHED AS PER DETAIL L9

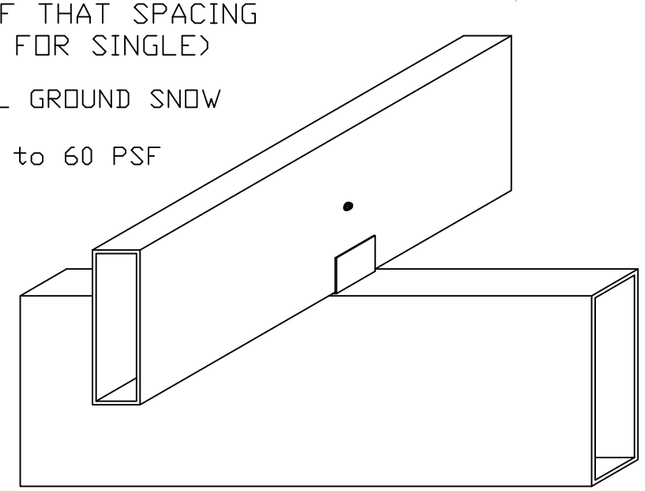

ASSEMBLED VIEW

Registered Professional Engineer (Civil) CERTIFICATE NO. 39702 CARL PUTNAM Date Signed ARIZONA U.S.A. Expires 09/30/2024

JAN 20 2023

Amerimax EXTERIOR HOME PRODUCTS
28921 US Hwy 74
Romoland, CA 92585

DRAWN BY: CP	TYPE:	
SCALE: NTS	Component Parts & Connection Details For Patio & Commercial Lattice Structures	
DATE:	FILE#: LT04-2021	SHEET: 4 of 4

SECTION 4.0 SOLID COVER INSTRUCTIONS AND POST TABLES

GENERAL INSTRUCTIONS FOR THESE TABLES

1. CHOOSE FREESTANDING OR ATTACHED STRUCTURE
2. CHOOSE PROJECTION (DIMENSION PARALLEL W/ PANELS), WIDTH (DIMENSION PERP TO PANELS) AND OVERHANG OF UNIT
3. DETERMINE WIND, LIVE (OR GROUND SNOW LOAD) AND Ss (see Gen Not #3) OF STRUCTURE SITE
   (PATIO COVERS USE 10 PSF MIN, CARPORT & COMMERCIAL UNITS USE 20 PSF MIN)
4. a. DETERMINE IF PANELS ARE SINGLE OR MULTISPAN. CHOOSE A PANEL FROM **SECTION 4.0** THAT HAS ADEQUATE CLEARSPAN FOR YOUR NEEDS.
   b. FOR AN ATTACHED STRUCTURE, CONFIRM THE ALLOWABLE SPAN BASED ON THE PANEL SUPPORT DETAIL.
   c. DETERMINE THE PANEL TO HEADER FASTENING REQUIREMENTS
5. DETERMINE TRIBUTARY WIDTH FROM TABLE 4.1 OR CALCULATE FROM TRIBUTARY DIAGRAM ON SC02 PAGE 2 OF 2
6. LOCATE HEADER TABLE IN **SECTION 5.0** W/ CORRECT PARAMETERS
   a. GROUND SNOW LOAD, SEE GEN NOTE #3
   b. LIVE LOAD, SEE #3 ABOVE
   c. WIND SPEED, SEE GEN NOTE #3
   d. EXPOSURE, SEE GEN NOTE #3
   e. SEISMIC, SEE GEN NOTE #3
   f. ATTACHED OR FREESTANDING
   g. TRIBUTARY WIDTH
   h. a-e ARE SET BY YOUR LOCAL BUILDING AUTHORITY
7. CHOOSE A HEADER FROM TABLES IN **SECTION 5.0** THAT HAS ADEQUATE POST SPACING. FOR PATIO COVERS SUPPORTED BY CONCRETE SLAB GOT TO STEP SLAB7
8. DETERMINE FOOTING SIZE
   USE THE UPLIFT FOOTING IF BOTH OF THESE CONDITIONS ARE MET
   a. STRUCTURE IS ATTACHED TO AN EXISTING STRUCTURE
   b. PROJECTION IS EQUAL OR SHORTER THAN WIDTH (SEE SHEET SCO1) OR TABLES L1 AND L2 ON MISC5 ARE SATISFIED
   c. GO TO #9a TO DETERMINE POST TYPE
   IF **EITHER** 8a OR 8b ARE **NOT** TRUE THEN:
   d. CHOOSE CONSTRAINED FOOTING SIZE FROM SECTION 5.0 BASED ON THE POST HEIGHT
   e. USE THE **LARGER** OF THE UPLIFT OR CONSTRAINED FOOTING SIZE
   f. CONSTRAINED FOOTINGS **MUST** USE DETAIL N29, AQ OR M5
   g. GO TO 9b
9. DETERMINE POST TYPE
   a. IF **BOTH** 8a AND 8b ARE TRUE THEN USE POST SHOWN IN TABLE IN SECTION 5.0 UNDER MIN POST TYPE. CROSS REFERENCE LETTER CODE W/ TABLE 4.2
   IF THIS POST'S MAX HEIGHT IS TOO SHORT, UPGRADE THE POST.
   EXAMPLE: IF POST CODE FROM SECTION 5.0 IS H3, WHICH HAS A MAX HEIGHT OF 9' BUT A 10' IS DESIRED THEN UPGRADE POST TO TYPE I1
   b. IF EITHER 8a OR 8b ARE **NOT** TRUE THEN:
   DETERMINE POST TYPE FROM CROSS REFERENCING THE UPLIFT FOOTING AND CONSTRAINED FOOTING ON TABLE 4.3
   example 1: A 40" UPLIFT FOOTING AND A 20" CONSTRAINED FOOTING ARE REQUIRED. POST TYPE "H4" IS REQUIRED. TABLE 4.2 SHOWS POST TYPE "H4" TO BE A 0.041"X3"X3" STEEL CLOVER POST WITH A MAX HEIGHT OF 8'.
   example 2: A 20" UPLIFT FOOTING AND A 40" CONSTRAINED FOOTING ARE REQUIRED. POST TYPE "K2" IS REQUIRED. TABLE 4.2 SHOWS POST TYPE "K2" TO BE A 3/16"X4"X4" STEEL POST WITH A MAX HEIGHT OF 12'.
10. DETERMINE HEADER TO POST OR EXISTING STRUCTURE REQUIREMENTS
11. USE THE APPROPRIATE DETAILS (N1-N35 on SHEETS NP01-NP04 or A-BM ON SHEETS CD01-CD09)
12. UPLIFT FOOTING MAY CHANGE SHAPE (ROUND, SET DEPTH) OR REDUCE SIZE USING TABLES 7.8, 7.9, 7.10, 7.11 AND 7.12.
13. CONSTRAINED FOOTINGS MAY CHANGE SHAPE OR BECOME NONCONSTRAINED USING TABLE 7.8
    CONSTRAINED FOOTINGS MAY BE REDUCED IN SIZE USING TABLE 7.12

FOR PATIO SLABS FOLLOW 1-7 FROM ABOVE THEN

SLAB 7. FROM THE APPLICABLE TABLE IN SECTION 5.0, USE THE **SMALLER** OF THE POST SPACING "ON SLAB" OR HEADER POST SPACING
SLAB 8. BOTH 8a AND 8b MUST BE TRUE
SLAB 9. FOLLOW **9a** FROM ABOVE
SLAB 10. FOLLOW 10 AND 11 FROM ABOVE
SLAB 11. FOR **TWO** POST STRUCTURES USE **TABLE 7.1** ON SHEET **Misc3** TO DETERMINE **"ON SLAB"** POST POST SPACING REQUIREMENTS INSTEAD OF SECTION 5.0. **HEADER** POST SPACING REQUIREMENTS ARE STILL DETERMINED FROM SECTION 5.0

Registered Professional Engineer (Civil) CERTIFICATE NO. 39702 CARL PUTNAM Date Signed ARIZONA U.S.A.

JAN 20 2023

TABLE 4.1 TRIBUTARY WIDTHS FOR SINGLE SPAN ATTACHED STRUCTURES

OVER-HANG	PROJECTION OF SINGLE SPAN STRUCTURES (FT)																
	6'	7'	8'	9'	10'	11'	12'	13'	14'	15'	16'	17'	18'	19'	20'	21'	22'
0'	3'	3.5'	4'	4.5'	5'	5.5'	6'	6.5'	7'	7.5'	8'	8.5'	9'	9.5'	10'	10.5'	11'
0.5'	3.25'	3.75'	4.25'	4.75'	5.25'	5.75'	6.25'	6.75'	7.25'	7.75'	8.25'	8.75'	9.25'	9.75'	10.3'	10.8'	11.3'
1'	3.5'	4'	4.5'	5'	5.5'	6'	6.5'	7'	7.5'	8'	8.5'	9'	9.5'	10'	10.5'	11'	11.5'
1.5'	n/a	4.25'	4.75'	5.25'	5.75'	6.25'	6.75'	7.25'	7.75'	8.25'	8.75'	9.25'	9.75'	10.3'	10.8'	11.3'	11.8'
2'	n/a	n/a	n/a	5.5'	6'	6.5'	7'	7.5'	8'	8.5'	9'	9.5'	10'	10.5'	11'	11.5'	12'
2.5'	n/a	n/a	n/a	n/a	n/a	6.75'	7.25'	7.75'	8.25'	8.75'	9.25'	9.75'	10.25'	10.8'	11.3'	11.8'	12.3'
3'	n/a	n/a	n/a	n/a	n/a	n/a	n/a	8'	8.5'	9'	9.5'	10'	10.5'	11'	11.5'	12'	12.5'
3.5'	n/a	n/a	n/a	n/a	n/a	n/a	n/a	n/a	n/a	9.25'	9.75'	10.25'	10.75'	11.3'	11.8'	12.3'	12.8'
4'	n/a	n/a	n/a	n/a	n/a	n/a	n/a	n/a	n/a	n/a	n/a	10.5'	11'	11.5'	12'	12.5'	13'
4.5'	n/a	n/a	n/a	n/a	n/a	n/a	n/a	n/a	n/a	n/a	n/a	n/a	n/a	11.8'	12.3'	12.8'	13.3'
5'	n/a	n/a	n/a	n/a	n/a	n/a	n/a	n/a	n/a	n/a	n/a	n/a	n/a	n/a	n/a	13'	13.5'

Table 4.2

Post Description	Max Hgt	POST Type	Detail
Twin 0.060"x1.5"x1.5" Scroll	10'	A1	AC
0.040"x3"x3" Aluminum Post	10'	A2	N14/Z
0.042"x3"x8" Aluminum Post	11'	A3	N30
0.024"x3"x3"Post with 0.024" Sideplates	10'	B	N16, BK
0.040"x3"x3"Post with 0.024" Sideplates	10'	C	N16, BK
Clover 0.030"x3"x3" Alum	11'	D	N11, AH
Clover 0.040"x3"x3" Alum	11'	E	N11, AH
0.040"x3"x3"Post with 0.032" Sideplates	10'	F	N16, BK
Colonial 0.062" Extruded	11'	G	AE
0.041"x3"x3" Steel Clover	11'	H1	N11, AH
0.041"x3"x3" Steel Clover	10'	H2	N11, AH
0.041"x3"x3" Steel Clover	9'	H3	N11, AH
0.041"x3"x3" Steel Clover	8'	H4	N11, AH
0.041"x3"x3" Steel Clover	7'	H5	N11, AH
1/8"x3"x3" Steel Square	12'	I1	N17, AG
1/8"x3"x3" Steel Square	10'	I2	N17, AG
3/16"x3"x3" Steel Square	12'	J1	N17, AG
3/16"x3"x3" Steel Square	10'	J2	N17, AG
3/16"x4"x4" Steel Square	15'	K1	N17, AG
3/16"x4"x4" Steel Square	12'	K2	N17, AG
3/16"x5"x5" Steel Square	15'	L1	N17, AG
3/16"x5"x5" Steel Square	12'	L2	N17, AG
3/16"x6"x6" Steel Square	15'	M1	N17, AG

TABLE 4.3

Uplift	Constrained d (in)																																
d (in)	16	17	18	19	20	21	22	23	24	25	26	27	28	29	30	31	32	33	34	35	36	37	38	39	40	41	42	43	44	45	46	47	48	49
14	H1	H1	H1	H1	H1	H1	H1	H1	I1	I1	I1	I1	I1	I1	I1	I1	J1	J1	J2	J2	J2	J2	J2	J2	K2	K2	K2	K2	K2	M1	M1	M1	M1	M1
15	H1	H1	H1	H1	H1	H1	H1	H1	I1	I1	I1	I1	I1	I1	I1	I1	J1	J1	J2	J2	J2	J2	J2	J2	K2	K2	K2	K2	K2	M1	M1	M1	M1	M1
16	H1	H1	H1	H1	H1	H1	H1	H1	I1	I1	I1	I1	I1	I1	I1	I1	J1	J1	J2	J2	J2	J2	J2	J2	K2	K2	K2	K2	K2	M1	M1	M1	M1	M1
17	H1	H1	H1	H1	H1	H1	H1	H1	I1	I1	I1	I1	I1	I1	I1	I2	J1	J1	J2	J2	J2	J2	J2	J2	K2	K2	K2	K2	K2	M1	M1	M1	M1	M1
18	H1	H1	H1	H1	H1	H1	H1	H1	I1	I1	I1	I1	I1	I1	I1	I2	J1	J1	J2	J2	J2	J2	J2	J2	K2	K2	K2	K2	K2	M1	M1	M1	M1	M1
19	H1	H1	H1	H1	H1	H1	H1	H1	I1	I1	I1	I1	I1	I1	I1	J1	J1	J1	J2	J2	J2	J2	J2	J2	K2	K2	K2	K2	K2	M1	M1	M1	M1	M1
20	H1	H1	H1	H1	H1	H1	H1	H1	I1	I1	I1	I1	I1	I1	I1	J1	J1	J1	J2	J2	J2	J2	J2	J2	K2	K2	K2	K2	K2	M1	M1	M1	M1	M1
21	H1	H1	H1	H1	H1	H1	H1	H1	I1	I1	I1	I1	I1	I1	I1	J1	J1	J1	J2	J2	J2	J2	J2	J2	K2	K2	K2	K2	K2	M1	M1	M1	M1	M1
22	H1	H1	H1	H1	H1	H1	H1	H2	I1	I1	I1	I1	I1	I1	I1	J1	J1	J1	J2	J2	J2	J2	J2	J2	K2	K2	K2	K2	K2	M1	M1	M1	M1	M1
23	H1	H1	H1	H1	H1	H1	H1	H2	I1	I1	I1	I1	I1	I1	I1	J1	J1	J1	J2	J2	J2	J2	J2	J2	K2	K2	K2	K2	K2	M1	M1	M1	M1	M1
24	H1	H1	H1	H1	H1	H1	H1	H3	I1	I1	I1	I1	I1	I1	I1	J1	J1	J1	J2	J2	J2	J2	J2	J2	K2	K2	K2	K2	K2	M1	M1	M1	M1	M1
25	H1	H1	H1	H1	H1	H1	H1	H4	I1	I1	I1	I1	I1	I1	I1	J1	J1	J1	J2	J2	J2	J2	J2	J2	K2	K2	K2	K2	K2	M1	M1	M1	M1	M1
26	H1	H1	H1	H1	H1	H1	H1	H5	I1	I1	I1	I1	I1	I1	I1	J1	J1	J1	J2	J2	J2	J2	J2	J2	K2	K2	K2	K2	K2	M1	M1	M1	M1	M1
27	H1	H1	H1	H1	H1	H1	H1	H5	I1	I1	I1	I1	I1	I1	I1	J1	J1	J1	J2	J2	J2	J2	J2	J2	K2	K2	K2	K2	K2	M1	M1	M1	M1	0
28	H1	H1	H1	H1	H1	H1	H1	I1	I1	I1	I1	I1	I1	I1	I1	J1	J1	J1	J2	J2	J2	J2	J2	J2	K2	K2	K2	K2	K2	M1	M1	M1	M1	0
29	H1	H1	H1	H1	H1	H1	H2	I1	I1	I1	I1	I1	I1	I1	I1	J1	J1	J1	J2	J2	J2	J2	J2	J2	K2	K2	K2	K2	K2	M1	M1	M1	M1	0
30	H1	H1	H1	H1	H1	H1	H3	I1	I1	I1	I1	I1	I1	I1	I2	J1	J1	J1	J2	J2	J2	J2	J2	J2	K2	K2	K2	K2	K2	M1	M1	M1	M1	0
31	H1	H1	H1	H1	H1	H1	H3	I1	I1	I1	I1	I1	I1	I1	I2	J1	J1	J1	J2	J2	J2	J2	J2	K1	K2	K2	K2	K2	K2	M1	M1	M1	M1	0
32	H1	H1	H1	H1	H1	H2	H4	I1	I1	I1	I1	I1	I1	I1	I2	J1	J1	J2	J2	J2	J2	J2	J2	K1	K2	K2	K2	K2	K2	M1	M1	M1	M1	0
33	H1	H1	H1	H1	H1	H2	H4	I1	I1	I1	I1	I1	I1	I1	I2	J1	J1	J2	J2	J2	J2	J2	J2	K1	K2	K2	K2	K2	K2	M1	M1	M1	M1	0
34	H1	H1	H1	H1	H1	H3	H5	I1	I1	I1	I1	I1	I1	I1	J1	J1	J1	J2	J2	J2	J2	J2	J2	K1	K2	K2	K2	K2	K2	M1	M1	M1	M1	0
35	H1	H1	H1	H1	H2	H3	I1	I1	I1	I1	I1	I1	I1	I1	J1	J1	J1	J2	J2	J2	J2	J2	J2	K2	K2	K2	K2	K2	K2	M1	M1	M1	M1	0
36	H1	H1	H1	H1	H2	H4	I1	I1	I1	I1	I1	I1	I1	I2	J1	J1	J1	J2	J2	J2	J2	J2	J2	K2	K2	K2	K2	K2	K2	M1	M1	M1	M1	0
37	H1	H1	H1	H2	H3	H4	I1	I1	I1	I1	I1	I1	I1	I2	J1	J1	J1	J2	J2	J2	J2	J2	J2	K2	K2	K2	K2	K2	L1	M1	M1	M1	M1	0
38	H1	H1	H1	H2	H3	H5	I1	I1	I1	I1	I1	I1	I1	I2	J1	J1	J1	J2	J2	J2	J2	J2	J2	K2	K2	K2	K2	K2	L1	M1	M1	M1	M1	0
39	H1	H1	H2	H3	H4	H5	I1	I1	I1	I1	I1	I1	I1	I2	J1	J1	J2	J2	J2	J2	J2	J2	J2	K2	K2	K2	K2	K2	L1	M1	M1	M1	M1	0
40	H1	H2	H2	H3	H4	I1	I1	I1	I1	I1	I1	I1	I2	I2	J1	J1	J2	J2	J2	J2	J2	J2	K1	K2	K2	K2	K2	K2	L1	M1	M1	M1	M1	0
41	H2	H2	H3	H3	H4	I1	I1	I1	I1	I1	I1	I1	I2	J1	J1	J1	J2	J2	J2	J2	J2	J2	K1	K2	K2	K2	K2	K2	M1	M1	M1	M1	M1	0
42	H2	H3	H3	H4	H5	I1	I1	I1	I1	I1	I1	I1	I2	J1	J1	J1	J2	J2	J2	J2	J2	J2	K1	K2	K2	K2	K2	K2	M1	M1	M1	M1	M1	0
43	H3	H3	H3	H4	H5	I1	I1	I1	I1	I1	I1	I2	I2	J1	J1	J1	J2	J2	J2	J2	J2	J2	K1	K2	K2	K2	K2	K2	M1	M1	M1	M1	M1	0
44	H3	H3	H4	H5	I1	I1	I1	I1	I1	I1	I1	I2	I2	J1	J1	J2	J2	J2	J2	J2	J2	J2	K1	K2	K2	K2	K2	K2	M1	M1	M1	M1	M1	0
45	H3	H4	H4	H5	I1	I1	I1	I1	I1	I1	I1	I2	J1	J1	J1	J2	J2	J2	J2	J2	J2	J2	K1	K2	K2	K2	K2	K2	M1	M1	M1	M1	M1	0
46	H4	H4	H5	I1	I1	I1	I1	I1	I1	I1	I2	I2	J1	J1	J1	J2	J2	J2	J2	J2	J2	J2	K1	K2	K2	K2	K2	K2	M1	M1	M1	M1	M1	0
47	H4	H5	H5	I1	I1	I1	I1	I1	I1	I1	I2	I2	J1	J1	J1	J2	J2	J2	J2	J2	J2	K1	K2	K2	K2	K2	K2	K2	M1	M1	M1	M1	M1	0
48	H5	H5	I1	I1	I1	I1	I1	I1	I1	I2	I2	I2	J1	J1	J2	J2	J2	J2	J2	J2	J2	K1	K2	K2	K2	K2	K2	K2	M1	M1	M1	M1	M1	0
49	H5	I1	I1	I1	I1	I1	I1	I1	I2	I2	I2	J1	J1	J1	J2	J2	J2	J2	J2	J2	J2	K1	K2	K2	K2	K2	K2	K2	L1	M1	M1	M1	M1	0	0
50	H5	I1	I1	I1	I1	I1	I1	I1	I2	I2	I2	J1	J1	J1	J2	J2	J2	J2	J2	J2	J2	K1	K2	K2	K2	K2	K2	K2	L1	M1	M1	M1	M1	0	0
51	I1	I1	I1	I1	I1	I1	I1	I2	I2	I2	J1	J1	J1	J2	J2	J2	J2	J2	J2	J2	K1	K1	K2	K2	K2	K2	K2	K2	L1	M1	M1	M1	M1	0	0
52	I1	I1	I1	I1	I1	I1	I2	I2	I2	I2	J1	J1	J1	J2	J2	J2	J2	J2	J2	J2	K1	K1	K2	K2	K2	K2	K2	K2	L1	M1	M1	M1	M1	0	0

SECTION 4.0 SOLID COVER PANEL SPANS FOR **ATTACHED** COMMERCIAL AND PATIO STRUCTURES

Amerimax Exterior Home Products
28921 US Hwy 74
Romoland, CA 92585

Carl Putnam, P. E.
3441 Ivylink Place
Lynchburg, VA 24503
(434) 384-2514
carlputnam@comcast.net

2.5" x6" Super Six (Single Span) Detail N3, A

Ground Snow Load (psf)	Panel Gauge (in)	Exposure B 105	Exposure B 110	Exposure B 115	Exposure C 100	Exposure C 105	Exposure C 110	Exposure C 115
10	0.018	11'-2"	10'-7"	10'-0"	9'-9"	9'-2"	8'-9"	8'-4"
	0.024	14'-8"	13'-11"	13'-3"	12'-10"	12'-1"	11'-6"	10'-11"
	0.032	17'-4"	17'-4"	17'-3"	16'-8"	15'-9"	14'-11"	14'-2"
	0.036	17'-11"	17'-11"	17'-11"	17'-11"	17'-7"	16'-8"	15'-10"
15	0.018	10'-8"	10'-5"	10'-0"	9'-9"	9'-2"	8'-9"	8'-4"
	0.024	14'-1"	13'-11"	13'-3"	12'-10"	12'-1"	11'-6"	10'-11"
	0.032	16'-1"	16'-1"	16'-1"	15'-10"	15'-9"	14'-11"	14'-2"
	0.036	16'-8"	16'-8"	16'-8"	16'-5"	16'-5"	16'-2"	15'-10"
20	0.018	9'-9"	9'-6"	9'-6"	9'-4"	9'-2"	8'-9"	8'-4"
	0.024	12'-10"	12'-10"	12'-10"	12'-7"	12'-1"	11'-6"	10'-11"
	0.032	15'-1"	15'-1"	15'-1"	15'-1"	14'-9"	14'-6"	14'-2"
	0.036	15'-8"	15'-8"	15'-8"	15'-8"	15'-6"	15'-3"	15'-1"
25	0.018	9'-6"	9'-6"	9'-4"	9'-2"	9'-0"	8'-9"	8'-4"
	0.024	12'-10"	12'-7"	12'-7"	12'-4"	12'-1"	11'-6"	10'-11"
	0.032	15'-1"	15'-1"	14'-11"	14'-9"	14'-6"	14'-6"	14'-2"
	0.036	15'-8"	15'-8"	15'-6"	15'-6"	15'-3"	15'-1"	14'-11"
30	0.018	9'-0"	8'-10"	8'-10"	8'-8"	8'-6"	8'-5"	8'-3"
	0.024	11'-10"	11'-8"	11'-8"	11'-5"	11'-3"	11'-1"	10'-11"
	0.032	14'-4"	14'-4"	14'-4"	14'-2"	14'-0"	13'-11"	13'-9"
	0.036	14'-11"	14'-11"	14'-11"	14'-9"	14'-7"	14'-5"	14'-3"
35.7	0.018	8'-6"	8'-5"	8'-3"	8'-3"	8'-2"	8'-0"	7'-8"
	0.024	11'-3"	11'-1"	10'-11"	10'-11"	10'-9"	10'-7"	10'-5"
	0.032	13'-11"	13'-11"	13'-9"	13'-9"	13'-7"	13'-5"	13'-2"
	0.036	14'-5"	14'-5"	14'-3"	14'-3"	14'-1"	14'-0"	13'-10"
42	0.018	7'-10"	7'-10"	7'-8"	7'-8"	7'-7"	7'-5"	7'-4"
	0.024	10'-4"	10'-4"	10'-4"	10'-4"	10'-2"	10'-0"	9'-11"
	0.032	12'-10"	12'-10"	12'-10"	12'-10"	12'-10"	12'-8"	12'-6"
	0.036	13'-7"	13'-7"	13'-7"	13'-7"	13'-7"	13'-6"	13'-4"
50	0.018	7'-2"	7'-2"	7'-2"	7'-2"	7'-2"	7'-0"	6'-11"
	0.024	9'-5"	9'-5"	9'-5"	9'-5"	9'-5"	9'-5"	9'-4"
	0.032	11'-9"	11'-9"	11'-9"	11'-9"	11'-9"	11'-9"	11'-8"
	0.036	12'-7"	12'-7"	12'-7"	12'-7"	12'-7"	12'-7"	12'-7"

TABLE 4.4

3.5" x12 Super 12 (Single Span) Detail D

Ground Snow Load (psf)	Panel Gauge (in)	Exposure B 105	Exposure B 110	Exposure B 115	Exposure C 100	Exposure C 105	Exposure C 110	Exposure C 115
10	0.018	12'-1"	12'-1"	10'-8"	10'-6"	9'-3"	8'-3"	7'-5"
	0.024	14'-7"	14'-7"	14'-2"	14'-2"	13'-9"	13'-5"	13'-0"
	0.032	17'-2"	17'-2"	17'-2"	16'-7"	16'-2"	16'-2"	15'-8"
	0.036	18'-4"	18'-4"	18'-4"	18'-4"	17'-9"	17'-3"	16'-9"
15	0.018	9'-7"	9'-2"	8'-8"	8'-8"	8'-4"	7'-7"	7'-4"
	0.024	13'-0"	13'-0"	12'-9"	12'-9"	12'-5"	12'-2"	11'-8"
	0.032	15'-4"	15'-4"	15'-4"	14'-11"	14'-7"	14'-3"	13'-11"
	0.036	16'-4"	16'-4"	16'-4"	16'-0"	16'-0"	15'-7"	15'-3"
20	0.018	7'-7"	7'-7"	7'-4"	7'-1"	6'-9"	6'-7"	6'-4"
	0.024	11'-10"	11'-8"	11'-8"	11'-5"	11'-2"	11'-0"	10'-9"
	0.032	13'-11"	13'-11"	13'-11"	13'-8"	13'-5"	13'-2"	12'-11"
	0.036	14'-11"	14'-11"	14'-11"	14'-7"	14'-4"	14'-1"	13'-10"
25	0.018	7'-7"	7'-4"	7'-1"	6'-9"	6'-7"	6'-4"	6'-1"
	0.024	11'-8"	11'-8"	11'-5"	11'-2"	11'-0"	10'-9"	10'-7"
	0.032	13'-11"	13'-8"	13'-8"	13'-5"	13'-2"	13'-2"	12'-11"
	0.036	14'-11"	14'-7"	14'-7"	14'-4"	14'-1"	14'-1"	13'-10"
30	0.018	6'-7"	6'-7"	6'-4"	6'-1"	5'-11"	5'-9"	5'-7"
	0.024	11'-0"	10'-9"	10'-9"	10'-7"	10'-5"	10'-3"	10'-1"
	0.032	12'-11"	12'-11"	12'-11"	12'-8"	12'-5"	12'-3"	12'-1"
	0.036	13'-10"	13'-10"	13'-10"	13'-7"	13'-4"	13'-1"	12'-11"
35.7	0.018	5'-11"	5'-9"	5'-7"	5'-7"	5'-5"	5'-1"	5'-0"
	0.024	10'-5"	10'-3"	10'-1"	10'-1"	9'-11"	9'-10"	9'-8"
	0.032	12'-3"	12'-3"	12'-1"	12'-1"	11'-8"	11'-6"	11'-4"
	0.036	13'-1"	13'-1"	12'-11"	12'-11"	12'-8"	12'-6"	12'-4"
42	0.018	5'-1"	5'-1"	5'-0"	5'-0"	4'-10"	4'-7"	4'-6"
	0.024	9'-6"	9'-6"	9'-6"	9'-6"	9'-5"	9'-3"	9'-2"
	0.032	11'-2"	11'-2"	11'-2"	11'-2"	11'-1"	10'-11"	10'-9"
	0.036	12'-0"	12'-0"	12'-0"	12'-0"	12'-0"	11'-8"	11'-6"
50	0.018	4'-3"	4'-3"	4'-3"	4'-3"	4'-3"	4'-1"	4'-0"
	0.024	8'-9"	8'-9"	8'-9"	8'-9"	8'-9"	8'-9"	8'-7"
	0.032	10'-3"	10'-3"	10'-3"	10'-3"	10'-3"	10'-3"	10'-2"
	0.036	11'-0"	11'-0"	11'-0"	11'-0"	11'-0"	11'-0"	10'-10"

TABLE 4.5

2.5" x 12" Mark X (Single Span) Detail B

Ground Snow Load (psf)	Panel Gauge (in)	Exposure B 105	Exposure B 110	Exposure B 115	Exposure C 100	Exposure C 105	Exposure C 110	Exposure C 115
10	0.018	7'-3"	6'-11"	6'-7"	6'-4"	6'-0"	5'-9"	5'-5"
	0.024	10'-0"	9'-6"	9'-0"	8'-9"	8'-3"	7'-10"	7'-6"
	0.032	13'-7"	13'-1"	12'-6"	12'-1"	11'-5"	10'-10"	10'-4"
	0.036	14'-1"	14'-1"	13'-9"	13'-4"	12'-7"	11'-11"	11'-4"
15	0.018	7'-3"	6'-11"	6'-7"	6'-4"	6'-0"	5'-9"	5'-5"
	0.024	9'-11"	9'-6"	9'-0"	8'-9"	8'-3"	7'-10"	7'-6"
	0.032	12'-7"	12'-7"	12'-5"	12'-1"	11'-5"	10'-10"	10'-4"
	0.036	13'-1"	13'-1"	12'-11"	12'-11"	12'-7"	11'-11"	11'-4"
20	0.018	6'-8"	6'-8"	6'-6"	6'-4"	6'-0"	5'-9"	5'-5"
	0.024	9'-1"	8'-11"	8'-11"	8'-8"	8'-3"	7'-10"	7'-6"
	0.032	11'-10"	11'-8"	11'-8"	11'-6"	11'-4"	10'-10"	10'-4"
	0.036	12'-4"	12'-4"	12'-4"	12'-2"	12'-0"	11'-8"	11'-4"
25	0.018	6'-8"	6'-6"	6'-5"	6'-3"	6'-0"	5'-9"	5'-5"
	0.024	8'-11"	8'-11"	8'-8"	8'-6"	8'-3"	7'-10"	7'-6"
	0.032	11'-8"	11'-8"	11'-6"	11'-4"	11'-2"	10'-10"	10'-4"
	0.036	12'-4"	12'-2"	12'-2"	12'-0"	11'-8"	11'-7"	11'-4"
30	0.018	6'-2"	6'-2"	6'-1"	6'-0"	5'-10"	5'-9"	5'-5"
	0.024	8'-5"	8'-3"	8'-3"	8'-1"	7'-10"	7'-8"	7'-6"
	0.032	11'-2"	10'-11"	10'-11"	10'-9"	10'-7"	10'-5"	10'-3"
	0.036	11'-9"	11'-7"	11'-7"	11'-5"	11'-4"	11'-2"	11'-1"
35.7	0.018	5'-10"	5'-9"	5'-8"	5'-8"	5'-7"	5'-5"	5'-5"
	0.024	7'-10"	7'-8"	7'-7"	7'-7"	7'-6"	7'-3"	7'-2"
	0.032	10'-7"	10'-5"	10'-3"	10'-3"	10'-1"	9'-11"	9'-10"
	0.036	11'-4"	11'-2"	11'-1"	11'-1"	10'-11"	10'-10"	10'-8"
42	0.018	5'-5"	5'-5"	5'-5"	5'-5"	5'-4"	5'-2"	5'-1"
	0.024	7'-3"	7'-3"	7'-2"	7'-2"	7'-1"	6'-11"	6'-10"
	0.032	9'-8"	9'-8"	9'-8"	9'-8"	9'-7"	9'-5"	9'-4"
	0.036	10'-7"	10'-7"	10'-7"	10'-7"	10'-5"	10'-3"	10'-2"
50	0.018	5'-0"	5'-0"	5'-0"	5'-0"	5'-0"	4'-11"	4'-10"
	0.024	6'-8"	6'-8"	6'-8"	6'-8"	6'-8"	6'-6"	6'-5"
	0.032	8'-10"	8'-10"	8'-10"	8'-10"	8'-10"	8'-10"	8'-9"
	0.036	9'-8"	9'-8"	9'-8"	9'-8"	9'-8"	9'-8"	9'-7"

TABLE 4.6

2"x6" Flat Panel (Single Span) Detail N2, C

Ground Snow Load (psf)	Panel Gauge (in)	Exposure B 105	Exposure B 110	Exposure B 115	Exposure C 100	Exposure C 105	Exposure C 110	Exposure C 115
10	0.018	10'-7"	10'-3"	9'-11"	9'-11"	9'-8"	9'-5"	9'-2"
	0.024	13'-2"	13'-2"	12'-11"	12'-11"	12'-8"	12'-5"	12'-3"
	0.032	14'-5"	14'-5"	14'-2"	14'-2"	13'-11"	13'-8"	13'-5"
	0.040	15'-6"	15'-6"	15'-6"	15'-2"	14'-11"	14'-8"	14'-5"
15	0.018	9'-5"	9'-2"	9'-0"	9'-0"	8'-9"	8'-7"	8'-5"
	0.024	12'-3"	12'-3"	12'-0"	12'-0"	11'-7"	11'-4"	11'-1"
	0.032	13'-5"	13'-5"	13'-2"	13'-2"	13'-0"	12'-10"	12'-7"
	0.040	14'-5"	14'-5"	14'-2"	14'-2"	13'-11"	13'-9"	13'-7"
20	0.018	8'-7"	8'-5"	8'-5"	8'-3"	8'-1"	7'-9"	7'-8"
	0.024	11'-4"	11'-1"	11'-1"	10'-10"	10'-8"	10'-6"	10'-3"
	0.032	12'-7"	12'-7"	12'-7"	12'-5"	12'-3"	12'-2"	12'-0"
	0.040	13'-7"	13'-7"	13'-7"	13'-4"	13'-2"	13'-0"	12'-10"
25	0.018	8'-5"	8'-5"	8'-3"	8'-1"	7'-9"	7'-8"	7'-6"
	0.024	11'-1"	11'-1"	10'-10"	10'-8"	10'-6"	10'-3"	10'-1"
	0.032	12'-7"	12'-5"	12'-5"	12'-3"	12'-2"	12'-2"	12'-0"
	0.040	13'-7"	13'-4"	13'-4"	13'-2"	13'-0"	13'-0"	12'-10"
30	0.018	7'-9"	7'-9"	7'-8"	7'-6"	7'-5"	7'-3"	7'-2"
	0.024	10'-6"	10'-3"	10'-3"	10'-1"	9'-11"	9'-9"	9'-8"
	0.032	12'-0"	12'-0"	12'-0"	11'-8"	11'-7"	11'-5"	11'-4"
	0.040	12'-10"	12'-10"	12'-10"	12'-9"	12'-7"	12'-5"	12'-4"
35.7	0.018	7'-5"	7'-3"	7'-2"	7'-2"	7'-1"	6'-10"	6'-9"
	0.024	9'-11"	9'-9"	9'-8"	9'-8"	9'-6"	9'-4"	9'-3"
	0.032	11'-7"	11'-5"	11'-4"	11'-4"	11'-3"	11'-1"	11'-0"
	0.040	12'-5"	12'-5"	12'-4"	12'-4"	12'-2"	12'-1"	11'-10"
42	0.018	6'-10"	6'-10"	6'-9"	6'-9"	6'-8"	6'-6"	6'-5"
	0.024	9'-1"	9'-1"	9'-1"	9'-1"	9'-0"	8'-10"	8'-9"
	0.032	10'-11"	10'-11"	10'-11"	10'-11"	10'-10"	10'-9"	10'-8"
	0.040	11'-9"	11'-9"	11'-9"	11'-9"	11'-8"	11'-6"	11'-5"
50	0.018	6'-4"	6'-4"	6'-4"	6'-4"	6'-4"	6'-2"	6'-1"
	0.024	8'-4"	8'-4"	8'-4"	8'-4"	8'-4"	8'-4"	8'-3"
	0.032	10'-4"	10'-4"	10'-4"	10'-4"	10'-4"	10'-4"	10'-2"
	0.040	11'-1"	11'-1"	11'-1"	11'-1"	11'-1"	11'-1"	11'-0"

TABLE 4.7

NOTE: PANELS MAY OVERHANG 25% OF THEIR CLEARSPAN

2.5" x6" Super Six (Multispan) Detail N3, A

Ground Snow Load (psf)	Panel Gauge (in)	Exposure B 105	Exposure B 110	Exposure B 115	Exposure C 100	Exposure C 105	Exposure C 110	Exposure C 115
10	0.018	10'-3"	10'-3"	10'-3"	10'-3"	9'-9"	9'-4"	8'-11"
	0.024	13'-2"	13'-2"	13'-2"	13'-2"	12'-7"	12'-0"	11'-5"
	0.032	16'-6"	16'-6"	16'-6"	16'-6"	15'-11"	15'-2"	14'-6"
	0.036	17'-11"	17'-11"	17'-11"	17'-11"	17'-7"	16'-9"	16'-0"
15	0.018	9'-1"	9'-1"	9'-1"	9'-1"	8'-10"	8'-8"	8'-5"
	0.024	11'-9"	11'-9"	11'-9"	11'-9"	11'-6"	11'-2"	10'-11"
	0.032	14'-9"	14'-9"	14'-9"	14'-9"	14'-5"	14'-1"	13'-9"
	0.036	16'-2"	16'-2"	16'-2"	16'-2"	15'-10"	15'-5"	15'-1"
20	0.018	8'-3"	8'-3"	8'-3"	8'-3"	8'-1"	7'-11"	7'-9"
	0.024	10'-8"	10'-8"	10'-8"	10'-8"	10'-6"	10'-3"	10'-3"
	0.032	13'-6"	13'-6"	13'-6"	13'-6"	13'-3"	13'-0"	13'-0"
	0.036	14'-10"	14'-10"	14'-10"	14'-10"	14'-6"	14'-3"	14'-3"
25	0.018	8'-3"	8'-3"	8'-1"	8'-1"	7'-11"	7'-9"	7'-7"
	0.024	10'-8"	10'-8"	10'-8"	10'-6"	10'-3"	10'-3"	10'-1"
	0.032	13'-6"	13'-6"	13'-6"	13'-3"	13'-0"	13'-0"	12'-9"
	0.036	14'-10"	14'-10"	14'-10"	14'-6"	14'-3"	14'-3"	13'-11"
30	0.018	7'-7"	7'-7"	7'-7"	7'-7"	7'-4"	7'-2"	7'-1"
	0.024	9'-11"	9'-11"	9'-11"	9'-11"	9'-9"	9'-9"	9'-7"
	0.032	12'-6"	12'-6"	12'-6"	12'-6"	12'-3"	12'-3"	12'-1"
	0.036	13'-8"	13'-8"	13'-8"	13'-8"	13'-6"	13'-6"	13'-3"
35.7	0.018	7'-2"	7'-2"	7'-1"	7'-1"	6'-11"	6'-10"	6'-9"
	0.024	9'-5"	9'-5"	9'-5"	9'-5"	9'-3"	9'-1"	8'-11"
	0.032	11'-10"	11'-10"	11'-10"	11'-10"	11'-8"	11'-6"	11'-4"
	0.036	13'-0"	13'-0"	13'-0"	13'-0"	12'-10"	12'-7"	12'-5"
42	0.018	6'-6"	6'-6"	6'-6"	6'-6"	6'-6"	6'-5"	6'-4"
	0.024	8'-7"	8'-7"	8'-7"	8'-7"	8'-7"	8'-7"	8'-5"
	0.032	10'-10"	10'-10"	10'-10"	10'-10"	10'-10"	10'-10"	10'-8"
	0.036	11'-11"	11'-11"	11'-11"	11'-11"	11'-11"	11'-11"	11'-9"
50	0.018	5'-11"	5'-11"	5'-11"	5'-11"	5'-11"	5'-11"	5'-10"
	0.024	7'-10"	7'-10"	7'-10"	7'-10"	7'-10"	7'-10"	7'-10"
	0.032	9'-11"	9'-11"	9'-11"	9'-11"	9'-11"	9'-11"	9'-11"
	0.036	10'-11"	10'-11"	10'-11"	10'-11"	10'-11"	10'-11"	10'-11"

TABLE 4.8

3.5" x12 Super 12 (Multi Span) Detail D

Ground Snow Load (psf)	Panel Gauge (in)	Exposure B 105	Exposure B 110	Exposure B 115	Exposure C 100	Exposure C 105	Exposure C 110	Exposure C 115
10	0.018	10'-8"	10'-8"	10'-8"	10'-8"	10'-1"	9'-6"	8'-8"
	0.024	14'-7"	14'-7"	14'-7"	14'-5"	13'-8"	13'-1"	12'-6"
	0.032	17'-2"	17'-2"	17'-2"	17'-0"	16'-2"	15'-5"	14'-9"
	0.036	18'-4"	18'-4"	18'-4"	18'-3"	17'-4"	16'-7"	15'-10"
15	0.018	8'-9"	8'-9"	8'-9"	8'-9"	8'-5"	8'-1"	7'-9"
	0.024	13'-0"	13'-0"	13'-0"	13'-0"	12'-9"	12'-5"	12'-2"
	0.032	15'-4"	15'-4"	15'-4"	15'-4"	14'-11"	14'-7"	14'-3"
	0.036	16'-4"	16'-4"	16'-4"	16'-4"	16'-0"	15'-7"	15'-3"
20	0.018	7'-5"	7'-5"	7'-5"	7'-2"	6'-11"	6'-8"	6'-5"
	0.024	11'-10"	11'-10"	11'-10"	11'-10"	11'-8"	11'-5"	11'-5"
	0.032	13'-11"	13'-11"	13'-11"	13'-11"	13'-8"	13'-5"	13'-5"
	0.036	14'-11"	14'-11"	14'-11"	14'-11"	14'-7"	14'-4"	14'-4"
25	0.018	7'-5"	7'-2"	7'-2"	6'-11"	6'-8"	6'-8"	6'-5"
	0.024	11'-10"	11'-10"	11'-10"	11'-8"	11'-5"	11'-5"	11'-2"
	0.032	13'-11"	13'-11"	13'-11"	13'-8"	13'-5"	13'-5"	13'-2"
	0.036	14'-11"	14'-11"	14'-11"	14'-7"	14'-4"	14'-4"	14'-1"
30	0.018	6'-5"	6'-5"	6'-5"	6'-3"	6'-0"	5'-8"	5'-6"
	0.024	11'-0"	11'-0"	11'-0"	11'-0"	10'-9"	10'-9"	10'-7"
	0.032	12'-11"	12'-11"	12'-11"	12'-11"	12'-8"	12'-8"	12'-5"
	0.036	13'-10"	13'-10"	13'-10"	13'-10"	13'-7"	13'-7"	13'-4"
35.7	0.018	5'-10"	5'-8"	5'-6"	5'-6"	5'-4"	5'-3"	5'-1"
	0.024	10'-5"	10'-5"	10'-5"	10'-5"	10'-3"	10'-1"	9'-11"
	0.032	12'-3"	12'-3"	12'-3"	12'-3"	12'-1"	11'-10"	11'-8"
	0.036	13'-1"	13'-1"	13'-1"	13'-1"	12'-11"	12'-8"	12'-6"
42	0.018	4'-11"	4'-11"	4'-11"	4'-11"	4'-10"	4'-8"	4'-7"
	0.024	9'-6"	9'-6"	9'-6"	9'-6"	9'-6"	9'-6"	9'-5"
	0.032	11'-2"	11'-2"	11'-2"	11'-2"	11'-2"	11'-2"	11'-1"
	0.036	12'-0"	12'-0"	12'-0"	12'-0"	12'-0"	12'-0"	11'-10"
50	0.018	4'-2"	4'-2"	4'-2"	4'-2"	4'-2"	4'-2"	4'-1"
	0.024	8'-5"	8'-5"	8'-5"	8'-5"	8'-5"	8'-5"	8'-5"
	0.032	10'-3"	10'-3"	10'-3"	10'-3"	10'-3"	10'-3"	10'-3"
	0.036	11'-0"	11'-0"	11'-0"	11'-0"	11'-0"	11'-0"	11'-0"

TABLE 4.9

2.5" x 12" Mark X (Multispan) Detail B

Ground Snow Load (psf)	Panel Gauge (in)	Exposure B 105	Exposure B 110	Exposure B 115	Exposure C 100	Exposure C 105	Exposure C 110	Exposure C 115
10	0.018	6'-7"	6'-7"	6'-4"	6'-4"	6'-2"	5'-9"	5'-7"
	0.024	9'-0"	9'-0"	9'-0"	9'-0"	8'-8"	8'-5"	8'-1"
	0.032	12'-2"	12'-2"	12'-2"	12'-2"	11'-9"	11'-4"	10'-10"
	0.036	13'-3"	13'-3"	13'-3"	13'-3"	12'-10"	12'-5"	11'-10"
15	0.018	5'-9"	5'-7"	5'-5"	5'-5"	5'-4"	5'-2"	5'-0"
	0.024	7'-11"	7'-11"	7'-11"	7'-9"	7'-9"	7'-6"	7'-2"
	0.032	10'-9"	10'-9"	10'-9"	10'-9"	10'-6"	10'-3"	10'-0"
	0.036	11'-9"	11'-9"	11'-9"	11'-9"	11'-6"	11'-2"	10'-11"
20	0.018	5'-2"	5'-0"	5'-0"	4'-11"	4'-10"	4'-8"	4'-7"
	0.024	7'-2"	7'-2"	7'-2"	7'-0"	6'-10"	6'-8"	6'-7"
	0.032	9'-9"	9'-9"	9'-9"	9'-9"	9'-6"	9'-4"	9'-4"
	0.036	10'-8"	10'-8"	10'-8"	10'-8"	10'-5"	10'-2"	10'-2"
25	0.018	5'-0"	5'-0"	4'-11"	4'-10"	4'-8"	4'-7"	4'-6"
	0.024	7'-2"	7'-0"	7'-0"	6'-10"	6'-8"	6'-8"	6'-7"
	0.032	9'-9"	9'-9"	9'-9"	9'-6"	9'-4"	9'-4"	9'-2"
	0.036	10'-8"	10'-8"	10'-8"	10'-5"	10'-2"	10'-2"	10'-0"
30	0.018	4'-8"	4'-7"	4'-7"	4'-6"	4'-5"	4'-4"	4'-3"
	0.024	6'-7"	6'-7"	6'-7"	6'-5"	6'-3"	6'-2"	6'-1"
	0.032	9'-0"	9'-0"	9'-0"	9'-0"	8'-9"	8'-9"	8'-8"
	0.036	9'-10"	9'-10"	9'-10"	9'-10"	9'-7"	9'-7"	9'-5"
35.7	0.018	4'-5"	4'-4"	4'-3"	4'-3"	4'-2"	4'-1"	4'-0"
	0.024	6'-2"	6'-2"	6'-1"	6'-1"	5'-10"	5'-9"	5'-8"
	0.032	8'-6"	8'-6"	8'-6"	8'-4"	8'-2"	8'-2"	8'-1"
	0.036	9'-3"	9'-3"	9'-3"	9'-3"	9'-1"	9'-0"	8'-10"
42	0.018	3'-11"	3'-11"	3'-11"	3'-11"	3'-10"	3'-8"	3'-8"
	0.024	5'-7"	5'-7"	5'-7"	5'-7"	5'-6"	5'-5"	5'-4"
	0.032	7'-8"	7'-8"	7'-8"	7'-8"	7'-8"	7'-8"	7'-7"
	0.036	8'-5"	8'-5"	8'-5"	8'-5"	8'-5"	8'-5"	8'-3"
50	0.018	3'-6"	3'-6"	3'-6"	3'-6"	3'-6"	3'-5"	3'-5"
	0.024	5'-0"	5'-0"	5'-0"	5'-0"	5'-0"	5'-0"	4'-11"
	0.032	7'-0"	7'-0"	7'-0"	7'-0"	7'-0"	7'-0"	7'-0"
	0.036	7'-8"	7'-8"	7'-8"	7'-8"	7'-8"	7'-8"	7'-8"

TABLE 4.10

2"x6" Flat Panel (Multispan) Detail N2, C

Ground Snow Load (psf)	Panel Gauge (in)	Exposure B 105	Exposure B 110	Exposure B 115	Exposure C 100	Exposure C 105	Exposure C 110	Exposure C 115
10	0.018	10'-7"	10'-7"	10'-7"	10'-5"	9'-11"	9'-5"	9'-0"
	0.024	13'-2"	13'-2"	13'-2"	13'-2"	12'-11"	12'-6"	12'-0"
	0.032	14'-5"	14'-5"	14'-5"	14'-5"	14'-2"	13'-11"	13'-8"
	0.040	15'-6"	15'-6"	15'-6"	15'-6"	15'-2"	14'-11"	14'-8"
15	0.018	9'-5"	9'-5"	9'-5"	9'-5"	9'-2"	9'-0"	8'-9"
	0.024	12'-3"	12'-3"	12'-3"	12'-3"	12'-0"	11'-10"	11'-7"
	0.032	13'-5"	13'-5"	13'-5"	13'-5"	13'-2"	13'-0"	12'-10"
	0.040	14'-5"	14'-5"	14'-5"	14'-5"	14'-2"	13'-11"	13'-9"
20	0.018	8'-7"	8'-7"	8'-7"	8'-7"	8'-5"	8'-3"	8'-1"
	0.024	11'-4"	11'-4"	11'-4"	11'-4"	11'-1"	10'-10"	10'-10"
	0.032	12'-7"	12'-7"	12'-7"	12'-7"	12'-5"	12'-3"	12'-3"
	0.040	13'-7"	13'-7"	13'-7"	13'-7"	13'-4"	13'-2"	13'-2"
25	0.018	8'-7"	8'-7"	8'-5"	8'-5"	8'-3"	8'-1"	7'-11"
	0.024	11'-4"	11'-4"	11'-4"	11'-1"	10'-10"	10'-10"	10'-8"
	0.032	12'-7"	12'-7"	12'-7"	12'-5"	12'-3"	12'-3"	12'-2"
	0.040	13'-7"	13'-7"	13'-7"	13'-4"	13'-2"	13'-2"	13'-0"
30	0.018	7'-11"	7'-11"	7'-11"	7'-11"	7'-9"	7'-8"	7'-6"
	0.024	10'-6"	10'-6"	10'-6"	10'-6"	10'-3"	10'-3"	10'-1"
	0.032	12'-0"	12'-0"	12'-0"	12'-0"	11'-10"	11'-10"	11'-8"
	0.040	12'-10"	12'-10"	12'-10"	12'-10"	12'-9"	12'-9"	12'-7"
35.7	0.018	7'-6"	7'-6"	7'-6"	7'-5"	7'-3"	7'-2"	7'-1"
	0.024	9'-11"	9'-11"	9'-11"	9'-11"	9'-9"	9'-8"	9'-6"
	0.032	11'-7"	11'-7"	11'-7"	11'-7"	11'-5"	11'-4"	11'-3"
	0.040	12'-5"	12'-5"	12'-5"	12'-5"	12'-4"	12'-2"	12'-1"
42	0.018	6'-10"	6'-10"	6'-10"	6'-10"	6'-10"	6'-9"	6'-8"
	0.024	9'-1"	9'-1"	9'-1"	9'-1"	9'-1"	9'-1"	9'-0"
	0.032	10'-11"	10'-11"	10'-11"	10'-11"	10'-11"	10'-11"	10'-10"
	0.040	11'-9"	11'-9"	11'-9"	11'-9"	11'-9"	11'-9"	11'-8"
50	0.018	6'-4"	6'-4"	6'-4"	6'-4"	6'-4"	6'-4"	6'-4"
	0.024	8'-4"	8'-4"	8'-4"	8'-4"	8'-4"	8'-4"	8'-4"
	0.032	10'-4"	10'-4"	10'-4"	10'-4"	10'-4"	10'-4"	10'-4"
	0.040	11'-1"	11'-1"	11'-1"	11'-1"	11'-1"	11'-1"	11'-1"

TABLE 4.11

JAN 20 2023

SECTION 4.0 SOLID COVER PANEL SPANS FOR **FREESTANDING** COMMERCIAL AND PATIO STRUCTURES

Amerimax Exterior Home Products
28921 US Hwy 74
Romoland, CA 92585

Carl Putnam, P. E.
3441 Ivylink Place
Lynchburg, VA 24503
(434) 384-2514
carlputnam@comcast.net

2.5" x6" Super Six (Single Span) DetaiL N3, A

Ground Snow Load (psf)	Panel Gauge (in)	Wind Speed and Exposure: Exposure B 100	Exposure B 110	Exposure B 115	Exposure C 100	Exposure C 105	Exposure C 110	Exposure C 115
10	0.018	12'-0"	12'-0"	11'-7"	11'-7"	11'-3"	11'-0"	10'-8"
	0.024	15'-9"	15'-9"	15'-3"	15'-3"	14'-10"	14'-5"	13'-10"
	0.032	17'-4"	17'-4"	16'-11"	16'-11"	16'-8"	16'-4"	16'-1"
	0.036	17'-11"	17'-11"	17'-7"	17'-7"	17'-3"	16'-11"	16'-8"
15	0.018	10'-8"	10'-8"	10'-8"	10'-5"	9'-2"	9'-0"	8'-8"
	0.024	14'-1"	14'-1"	14'-1"	13'-9"	13'-5"	13'-1"	12'-10"
	0.032	16'-1"	16'-1"	16'-1"	15'-10"	15'-7"	15'-4"	15'-1"
	0.036	16'-8"	16'-8"	16'-8"	16'-5"	16'-2"	15'-11"	15'-8"
20	0.018	9'-6"	9'-2"	9'-0"	8'-10"	8'-6"	8'-5"	8'-3"
	0.024	12'-10"	12'-10"	12'-10"	12'-7"	12'-4"	12'-1"	11'-10"
	0.032	15'-1"	15'-1"	15'-1"	14'-11"	14'-9"	14'-6"	14'-4"
	0.036	15'-8"	15'-8"	15'-8"	15'-6"	15'-3"	15'-1"	14'-11"
25	0.018	9'-4"	9'-0"	8'-10"	8'-8"	8'-6"	8'-3"	8'-2"
	0.024	12'-10"	12'-10"	12'-7"	12'-4"	12'-1"	11'-10"	11'-10"
	0.032	15'-1"	15'-1"	14'-11"	14'-9"	14'-6"	14'-4"	14'-4"
	0.036	15'-8"	15'-8"	15'-6"	15'-3"	15'-1"	14'-11"	14'-11"
30	0.018	8'-10"	8'-6"	8'-5"	8'-3"	8'-2"	7'-11"	7'-10"
	0.024	11'-10"	11'-10"	11'-10"	11'-8"	11'-5"	11'-3"	11'-1"
	0.032	14'-4"	14'-4"	14'-4"	14'-2"	14'-0"	13'-11"	13'-9"
	0.036	14'-11"	14'-11"	14'-11"	14'-9"	14'-7"	14'-5"	14'-3"
35.7	0.018	8'-3"	8'-2"	8'-0"	7'-10"	7'-8"	7'-7"	7'-5"
	0.024	11'-3"	11'-3"	11'-1"	11'-1"	10'-11"	10'-9"	10'-7"
	0.032	13'-11"	13'-11"	13'-9"	13'-9"	13'-7"	13'-5"	13'-2"
	0.036	14'-5"	14'-5"	14'-3"	14'-3"	14'-1"	14'-0"	13'-10"
42	0.018	7'-10"	7'-8"	7'-7"	7'-5"	7'-4"	7'-3"	7'-1"
	0.024	10'-4"	10'-4"	10'-4"	10'-4"	9'-8"	9'-7"	9'-4"
	0.032	12'-10"	12'-10"	12'-10"	12'-10"	12'-10"	12'-8"	12'-6"
	0.036	13'-7"	13'-7"	13'-7"	13'-7"	13'-7"	13'-6"	13'-4"
50	0.018	7'-2"	7'-2"	7'-2"	7'-0"	6'-11"	6'-10"	6'-8"
	0.024	9'-5"	9'-5"	9'-5"	9'-3"	9'-2"	9'-0"	8'-10"
	0.032	11'-9"	11'-9"	11'-9"	11'-9"	11'-9"	11'-9"	11'-9"
	0.036	12'-7"	12'-7"	12'-7"	12'-7"	12'-7"	12'-7"	12'-7"

TABLE 4.20

3.5"x12" Super 12 (Single Span) Detail D

Ground Snow Load (psf)	Panel Gauge (in)	Wind Speed and Exposure: Exposure B 100	Exposure B 110	Exposure B 115	Exposure C 100	Exposure C 105	Exposure C 110	Exposure C 115
10	0.018	12'-1"	12'-1"	11'-4"	11'-4"	10'-8"	7'-11"	7'-4"
	0.024	14'-7"	14'-7"	14'-2"	14'-2"	13'-9"	13'-5"	13'-0"
	0.032	17'-2"	17'-2"	16'-7"	16'-7"	16'-2"	15'-8"	15'-4"
	0.036	18'-4"	18'-4"	17'-9"	17'-9"	17'-3"	16'-9"	16'-4"
15	0.018	9'-2"	8'-4"	7'-11"	7'-7"	7'-1"	6'-9"	6'-4"
	0.024	13'-0"	13'-0"	13'-0"	12'-9"	12'-5"	12'-2"	11'-10"
	0.032	15'-4"	15'-4"	15'-4"	14'-11"	14'-7"	14'-3"	13'-11"
	0.036	16'-4"	16'-4"	16'-4"	16'-0"	15'-7"	15'-3"	14'-11"
20	0.018	7'-7"	7'-1"	6'-9"	6'-7"	6'-1"	5'-11"	5'-9"
	0.024	11'-10"	11'-10"	11'-10"	11'-8"	11'-5"	11'-2"	11'-0"
	0.032	13'-11"	13'-11"	13'-11"	13'-8"	13'-5"	13'-2"	12'-11"
	0.036	14'-11"	14'-11"	14'-11"	14'-7"	14'-4"	14'-1"	13'-10"
25	0.018	7'-4"	6'-9"	6'-7"	6'-4"	6'-1"	5'-9"	5'-7"
	0.024	11'-10"	11'-10"	11'-8"	11'-5"	11'-2"	11'-0"	11'-0"
	0.032	13'-11"	13'-11"	13'-8"	13'-5"	13'-2"	12'-11"	12'-11"
	0.036	14'-11"	14'-11"	14'-7"	14'-4"	14'-1"	13'-10"	13'-10"
30	0.018	6'-7"	6'-1"	5'-11"	5'-9"	5'-7"	5'-3"	4'-4"
	0.024	11'-0"	11'-0"	11'-0"	10'-9"	10'-7"	10'-5"	9'-6"
	0.032	12'-11"	12'-11"	12'-11"	12'-8"	12'-5"	12'-3"	12'-1"
	0.036	13'-10"	13'-10"	13'-10"	13'-7"	13'-4"	13'-1"	12'-11"
35.7	0.018	5'-9"	5'-7"	5'-5"	4'-7"	4'-4"	4'-2"	4'-1"
	0.024	10'-5"	10'-5"	9'-10"	9'-6"	9'-5"	9'-3"	9'-0"
	0.032	12'-3"	12'-3"	12'-1"	12'-1"	11'-10"	11'-8"	11'-6"
	0.036	13'-1"	13'-1"	12'-11"	12'-11"	12'-8"	12'-6"	12'-4"
42	0.018	5'-1"	4'-6"	4'-4"	4'-2"	4'-0"	3'-10"	3'-9"
	0.024	9'-6"	9'-5"	9'-3"	9'-0"	8'-11"	8'-10"	8'-7"
	0.032	11'-2"	11'-2"	11'-2"	11'-2"	11'-2"	11'-1"	10'-11"
	0.036	12'-0"	12'-0"	12'-0"	12'-0"	12'-0"	11'-10"	11'-8"
50	0.018	4'-3"	4'-0"	3'-11"	3'-9"	3'-7"	3'-6"	3'-5"
	0.024	8'-9"	8'-9"	8'-9"	8'-6"	8'-5"	8'-4"	8'-2"
	0.032	10'-3"	10'-3"	10'-3"	10'-3"	10'-3"	10'-3"	9'-7"
	0.036	11'-0"	11'-0"	11'-0"	11'-0"	11'-0"	11'-0"	11'-0"

TABLE 4.21

2.5" x 12" Mark X (Single Span) Detail B

Ground Snow Load (psf)	Panel Gauge (in)	Wind Speed and Exposure: Exposure B 100	Exposure B 110	Exposure B 115	Exposure C 100	Exposure C 105	Exposure C 110	Exposure C 115
10	0.018	7'-7"	6'-10"	6'-7"	6'-10"	6'-6"	6'-3"	5'-11"
	0.024	11'-2"	11'-2"	10'-10"	10'-10"	10'-6"	8'-4"	7'-11"
	0.032	13'-7"	13'-7"	13'-4"	13'-4"	13'-1"	12'-10"	12'-7"
	0.036	14'-1"	14'-1"	13'-10"	13'-10"	13'-7"	13'-4"	13'-1"
15	0.018	7'-4"	6'-10"	6'-7"	6'-8"	6'-5"	6'-3"	5'-11"
	0.024	9'-8"	9'-3"	9'-1"	8'-11"	8'-6"	8'-4"	7'-11"
	0.032	12'-7"	12'-7"	12'-7"	12'-5"	12'-3"	12'-0"	11'-10"
	0.036	13'-1"	13'-1"	13'-1"	12'-11"	12'-8"	12'-6"	12'-4"
20	0.018	6'-8"	6'-5"	6'-3"	6'-2"	6'-0"	5'-10"	5'-9"
	0.024	8'-11"	8'-6"	8'-5"	8'-3"	7'-11"	7'-10"	7'-8"
	0.032	11'-10"	11'-10"	11'-10"	11'-8"	11'-6"	11'-4"	11'-2"
	0.036	12'-4"	12'-4"	12'-4"	12'-2"	12'-0"	11'-10"	11'-8"
25	0.018	6'-6"	6'-3"	6'-2"	6'-1"	6'-0"	5'-9"	5'-8"
	0.024	8'-8"	8'-5"	8'-3"	8'-1"	7'-11"	7'-8"	7'-7"
	0.032	11'-10"	11'-10"	11'-8"	11'-6"	11'-4"	11'-2"	11'-2"
	0.036	12'-4"	12'-4"	12'-2"	12'-0"	11'-10"	11'-8"	11'-8"
30	0.018	6'-2"	6'-0"	5'-10"	5'-9"	5'-8"	5'-6"	5'-5"
	0.024	8'-3"	7'-11"	7'-10"	7'-8"	7'-7"	7'-4"	7'-3"
	0.032	11'-2"	11'-2"	11'-2"	10'-11"	10'-9"	10'-7"	10'-5"
	0.036	11'-8"	11'-8"	11'-8"	11'-7"	11'-5"	11'-4"	11'-2"
35.7	0.018	5'-9"	5'-8"	5'-7"	5'-5"	5'-5"	5'-4"	5'-2"
	0.024	7'-8"	7'-7"	7'-6"	7'-3"	7'-2"	7'-1"	6'-11"
	0.032	10'-7"	10'-7"	10'-5"	10'-5"	9'-7"	9'-5"	9'-2"
	0.036	11'-4"	11'-4"	11'-2"	11'-2"	11'-1"	10'-11"	10'-10"
42	0.018	5'-5"	5'-5"	5'-4"	5'-2"	4'-10"	4'-9"	4'-8"
	0.024	7'-3"	7'-2"	7'-1"	6'-11"	6'-10"	6'-9"	6'-7"
	0.032	9'-8"	9'-7"	9'-5"	9'-2"	9'-1"	9'-0"	8'-9"
	0.036	10'-7"	10'-7"	10'-7"	10'-7"	10'-7"	10'-5"	9'-7"
50	0.018	5'-0"	4'-10"	4'-9"	4'-8"	4'-7"	4'-6"	4'-5"
	0.024	6'-8"	6'-8"	6'-8"	6'-6"	6'-5"	6'-4"	6'-3"
	0.032	8'-10"	8'-10"	8'-10"	8'-8"	8'-7"	8'-6"	8'-4"
	0.036	9'-8"	9'-8"	9'-8"	9'-5"	9'-4"	9'-3"	9'-1"

TABLE 4.22

2"x6" Flat Panel (Single Span) Detail N2, C

Ground Snow Load (psf)	Panel Gauge (in)	Wind Speed and Exposure: Exposure B 100	Exposure B 110	Exposure B 115	Exposure C 100	Exposure C 105	Exposure C 110	Exposure C 115
10	0.018	10'-7"	10'-7"	9'-5"	9'-0"	8'-9"	8'-7"	8'-3"
	0.024	13'-2"	13'-2"	12'-11"	12'-11"	12'-8"	12'-5"	12'-3"
	0.032	14'-5"	14'-5"	14'-2"	14'-2"	13'-11"	13'-8"	13'-5"
	0.040	15'-6"	15'-6"	15'-2"	15'-2"	14'-11"	14'-8"	14'-5"
15	0.018	9'-2"	8'-9"	8'-7"	8'-5"	8'-1"	7'-11"	7'-8"
	0.024	12'-3"	12'-3"	12'-3"	12'-0"	11'-10"	11'-7"	11'-4"
	0.032	13'-5"	13'-5"	13'-5"	13'-2"	13'-0"	12'-10"	12'-7"
	0.040	14'-5"	14'-5"	14'-5"	14'-2"	13'-11"	13'-9"	13'-7"
20	0.018	8'-5"	8'-1"	7'-11"	7'-9"	7'-6"	7'-5"	7'-3"
	0.024	11'-4"	11'-4"	11'-4"	11'-1"	10'-10"	10'-8"	10'-6"
	0.032	12'-7"	12'-7"	12'-7"	12'-5"	12'-3"	12'-2"	12'-0"
	0.040	13'-7"	13'-7"	13'-7"	13'-4"	13'-2"	13'-0"	12'-10"
25	0.018	8'-3"	7'-11"	7'-9"	7'-8"	7'-6"	7'-3"	7'-2"
	0.024	11'-4"	11'-4"	11'-1"	10'-10"	10'-8"	10'-6"	10'-6"
	0.032	12'-7"	12'-7"	12'-5"	12'-3"	12'-2"	12'-0"	12'-0"
	0.040	13'-7"	13'-7"	13'-4"	13'-2"	13'-0"	12'-10"	12'-10"
30	0.018	7'-9"	7'-6"	7'-5"	7'-3"	7'-2"	7'-0"	6'-10"
	0.024	10'-6"	10'-6"	10'-6"	9'-8"	9'-6"	9'-3"	9'-1"
	0.032	12'-0"	12'-0"	12'-0"	11'-10"	11'-8"	11'-7"	11'-5"
	0.040	12'-10"	12'-10"	12'-10"	12'-9"	12'-7"	12'-5"	12'-4"
35.7	0.018	7'-3"	7'-2"	7'-1"	6'-10"	6'-9"	6'-8"	6'-6"
	0.024	9'-8"	9'-6"	9'-4"	9'-1"	9'-0"	8'-10"	8'-8"
	0.032	11'-7"	11'-7"	11'-5"	11'-5"	11'-4"	11'-3"	11'-1"
	0.040	12'-5"	12'-5"	12'-4"	12'-4"	12'-2"	12'-1"	11'-11"
42	0.018	6'-10"	6'-9"	6'-8"	6'-6"	6'-5"	6'-4"	6'-3"
	0.024	9'-1"	9'-0"	8'-10"	8'-8"	8'-6"	8'-5"	8'-3"
	0.032	10'-11"	10'-11"	10'-11"	10'-11"	10'-11"	10'-10"	10'-9"
	0.040	11'-9"	11'-9"	11'-9"	11'-9"	11'-9"	11'-8"	11'-6"
50	0.018	6'-4"	6'-4"	6'-4"	6'-2"	6'-1"	6'-0"	5'-11"
	0.024	8'-4"	8'-4"	8'-4"	8'-2"	8'-1"	8'-0"	7'-10"
	0.032	10'-4"	10'-4"	10'-4"	10'-4"	10'-4"	10'-4"	9'-8"
	0.040	11'-1"	11'-1"	11'-1"	11'-1"	11'-1"	11'-1"	11'-1"

TABLE 4.23

NOTE: PANELS MAY OVERHANG 25% OF THEIR CLEARSPAN

2.5" x6" Super Six (Multispan) Detail N3, A

Ground Snow Load (psf)	Panel Gauge (in)	Wind Speed and Exposure: Exposure B 100	Exposure B 110	Exposure B 115	Exposure C 100	Exposure C 105	Exposure C 110	Exposure C 115
10	0.018	10'-3"	10'-3"	9'-11"	9'-11"	9'-8"	9'-4"	9'-1"
	0.024	13'-2"	13'-2"	12'-9"	12'-9"	12'-5"	12'-1"	11'-9"
	0.032	16'-6"	16'-6"	16'-1"	16'-1"	15'-7"	15'-2"	14'-9"
	0.036	17'-11"	17'-11"	17'-7"	17'-7"	17'-1"	16'-8"	16'-2"
15	0.018	9'-1"	9'-1"	9'-1"	8'-10"	8'-8"	8'-5"	8'-3"
	0.024	11'-9"	11'-9"	11'-9"	11'-6"	11'-2"	10'-11"	10'-8"
	0.032	14'-9"	14'-9"	14'-9"	14'-5"	14'-1"	13'-9"	13'-6"
	0.036	16'-2"	16'-2"	16'-2"	15'-10"	15'-5"	15'-1"	14'-10"
20	0.018	8'-3"	8'-3"	8'-3"	8'-1"	7'-11"	7'-9"	7'-7"
	0.024	10'-8"	10'-8"	10'-8"	10'-6"	10'-3"	10'-1"	9'-11"
	0.032	13'-6"	13'-6"	13'-6"	13'-3"	13'-0"	12'-9"	12'-6"
	0.036	14'-10"	14'-10"	14'-10"	14'-6"	14'-3"	13'-11"	13'-8"
25	0.018	8'-3"	8'-3"	8'-1"	7'-11"	7'-9"	7'-7"	7'-7"
	0.024	10'-8"	10'-8"	10'-6"	10'-3"	10'-1"	9'-11"	9'-11"
	0.032	13'-6"	13'-6"	13'-3"	13'-0"	12'-9"	12'-6"	12'-6"
	0.036	14'-10"	14'-10"	14'-6"	14'-3"	13'-11"	13'-8"	13'-8"
30	0.018	7'-7"	7'-7"	7'-7"	7'-5"	7'-4"	7'-2"	7'-1"
	0.024	9'-11"	9'-11"	9'-11"	9'-9"	9'-7"	9'-5"	9'-3"
	0.032	12'-6"	12'-6"	12'-6"	12'-3"	12'-1"	11'-10"	11'-8"
	0.036	13'-8"	13'-8"	13'-8"	13'-6"	13'-3"	13'-0"	12'-10"
35.7	0.018	7'-2"	7'-2"	7'-1"	7'-1"	6'-11"	6'-10"	6'-9"
	0.024	9'-5"	9'-5"	9'-3"	9'-3"	9'-1"	8'-11"	8'-10"
	0.032	11'-10"	11'-10"	11'-8"	11'-8"	11'-6"	11'-4"	11'-2"
	0.036	13'-0"	13'-0"	12'-10"	12'-10"	12'-7"	12'-5"	12'-3"
42	0.018	6'-6"	6'-6"	6'-6"	6'-6"	6'-6"	6'-5"	6'-4"
	0.024	8'-7"	8'-7"	8'-7"	8'-7"	8'-7"	8'-5"	8'-4"
	0.032	10'-10"	10'-10"	10'-10"	10'-10"	10'-10"	10'-8"	10'-7"
	0.036	11'-11"	11'-11"	11'-11"	11'-11"	11'-11"	11'-9"	11'-7"
50	0.018	5'-11"	5'-11"	5'-11"	5'-11"	5'-11"	5'-11"	5'-11"
	0.024	7'-10"	7'-10"	7'-10"	7'-10"	7'-10"	7'-10"	7'-10"
	0.032	9'-11"	9'-11"	9'-11"	9'-11"	9'-11"	9'-11"	9'-11"
	0.036	10'-11"	10'-11"	10'-11"	10'-11"	10'-11"	10'-11"	10'-11"

TABLE 4.24

3.5"x12" Super 12 (Multispan) Detail D

Ground Snow Load (psf)	Panel Gauge (in)	Wind Speed and Exposure: Exposure B 100	Exposure B 110	Exposure B 115	Exposure C 100	Exposure C 105	Exposure C 110	Exposure C 115
10	0.018	10'-8"	10'-8"	10'-1"	10'-1"	9'-7"	9'-2"	8'-9"
	0.024	14'-7"	14'-7"	14'-2"	14'-2"	13'-9"	13'-5"	13'-0"
	0.032	17'-2"	17'-2"	16'-7"	16'-7"	16'-2"	15'-8"	15'-4"
	0.036	18'-4"	18'-4"	17'-9"	17'-9"	17'-3"	16'-9"	16'-4"
15	0.018	8'-9"	8'-9"	8'-9"	8'-5"	8'-1"	7'-9"	7'-5"
	0.024	13'-0"	13'-0"	13'-0"	12'-9"	12'-5"	12'-2"	11'-10"
	0.032	15'-4"	15'-4"	15'-4"	14'-11"	14'-7"	14'-3"	13'-11"
	0.036	16'-4"	16'-4"	16'-4"	16'-0"	15'-7"	15'-3"	14'-11"
20	0.018	7'-5"	7'-5"	7'-5"	7'-2"	6'-11"	6'-8"	6'-5"
	0.024	11'-10"	11'-10"	11'-10"	11'-8"	11'-5"	11'-2"	11'-0"
	0.032	13'-11"	13'-11"	13'-11"	13'-8"	13'-5"	13'-2"	12'-11"
	0.036	14'-11"	14'-11"	14'-11"	14'-7"	14'-4"	14'-1"	13'-10"
25	0.018	7'-5"	7'-5"	7'-2"	6'-11"	6'-8"	6'-5"	6'-5"
	0.024	11'-10"	11'-10"	11'-8"	11'-5"	11'-2"	11'-0"	11'-0"
	0.032	13'-11"	13'-11"	13'-8"	13'-5"	13'-2"	12'-11"	12'-11"
	0.036	14'-11"	14'-11"	14'-7"	14'-4"	14'-1"	13'-10"	13'-10"
30	0.018	6'-5"	6'-5"	6'-5"	6'-3"	6'-0"	5'-10"	5'-8"
	0.024	11'-0"	11'-0"	11'-0"	10'-9"	10'-7"	10'-5"	10'-3"
	0.032	12'-11"	12'-11"	12'-11"	12'-8"	12'-5"	12'-3"	12'-1"
	0.036	13'-10"	13'-10"	13'-10"	13'-7"	13'-4"	13'-1"	12'-11"
35.7	0.018	5'-10"	5'-10"	5'-8"	5'-8"	5'-6"	5'-4"	5'-3"
	0.024	10'-5"	10'-5"	10'-3"	10'-3"	10'-1"	9'-11"	9'-10"
	0.032	12'-3"	12'-3"	12'-1"	12'-1"	11'-10"	11'-8"	11'-6"
	0.036	13'-1"	13'-1"	12'-11"	12'-11"	12'-8"	12'-6"	12'-4"
42	0.018	4'-11"	4'-11"	4'-11"	4'-6"	4'-4"	4'-3"	4'-1"
	0.024	9'-6"	9'-6"	9'-6"	9'-6"	9'-6"	9'-5"	9'-2"
	0.032	11'-2"	11'-2"	11'-2"	11'-2"	11'-2"	11'-1"	10'-11"
	0.036	12'-0"	12'-0"	12'-0"	12'-0"	12'-0"	11'-10"	11'-8"
50	0.018	4'-2"	4'-2"	4'-2"	4'-0"	3'-11"	3'-10"	3'-8"
	0.024	8'-5"	8'-5"	8'-5"	8'-5"	8'-5"	8'-5"	8'-5"
	0.032	10'-3"	10'-3"	10'-3"	10'-3"	10'-3"	10'-3"	10'-3"
	0.036	11'-0"	11'-0"	11'-0"	11'-0"	11'-0"	11'-0"	11'-0"

TABLE 4.25

2.5" x 12" Mark X (Multispan) Detail B

Ground Snow Load (psf)	Panel Gauge (in)	Wind Speed and Exposure: Exposure B 100	Exposure B 110	Exposure B 115	Exposure C 100	Exposure C 105	Exposure C 110	Exposure C 115
10	0.018	6'-7"	6'-7"	6'-4"	6'-4"	6'-2"	5'-11"	5'-9"
	0.024	9'-0"	9'-0"	8'-8"	8'-8"	8'-5"	8'-2"	7'-11"
	0.032	12'-2"	12'-2"	11'-9"	11'-9"	11'-5"	11'-1"	10'-9"
	0.036	13'-3"	13'-3"	12'-10"	12'-10"	12'-5"	12'-1"	11'-9"
15	0.018	5'-9"	5'-9"	5'-9"	5'-7"	5'-5"	5'-4"	5'-2"
	0.024	7'-11"	7'-11"	7'-11"	7'-9"	7'-6"	7'-4"	7'-2"
	0.032	10'-9"	10'-9"	10'-9"	10'-6"	10'-3"	10'-0"	9'-9"
	0.036	11'-9"	11'-9"	11'-9"	11'-6"	11'-2"	10'-11"	10'-8"
20	0.018	5'-2"	5'-2"	5'-2"	4'-7"	4'-5"	4'-4"	4'-3"
	0.024	7'-2"	7'-2"	7'-2"	7'-0"	6'-10"	6'-8"	6'-7"
	0.032	9'-9"	9'-9"	9'-9"	9'-6"	9'-4"	9'-2"	9'-0"
	0.036	10'-8"	10'-8"	10'-8"	10'-5"	10'-2"	10'-0"	9'-10"
25	0.018	5'-2"	5'-2"	4'-7"	4'-6"	4'-5"	4'-3"	4'-2"
	0.024	7'-2"	7'-2"	7'-0"	6'-10"	6'-8"	6'-7"	6'-7"
	0.032	9'-9"	9'-9"	9'-6"	9'-4"	9'-2"	9'-0"	9'-0"
	0.036	10'-8"	10'-8"	10'-5"	10'-2"	10'-0"	9'-10"	9'-10"
30	0.018	4'-7"	4'-5"	4'-4"	4'-3"	4'-2"	4'-0"	3'-11"
	0.024	6'-7"	6'-7"	6'-7"	6'-5"	6'-3"	6'-2"	6'-1"
	0.032	9'-0"	9'-0"	9'-0"	8'-9"	8'-8"	8'-6"	8'-4"
	0.036	9'-10"	9'-10"	9'-10"	9'-7"	9'-5"	9'-3"	9'-1"
35.7	0.018	4'-3"	4'-2"	4'-1"	3'-11"	3'-11"	3'-10"	3'-8"
	0.024	6'-2"	6'-2"	6'-1"	6'-1"	5'-11"	5'-10"	5'-9"
	0.032	8'-6"	8'-6"	8'-4"	8'-4"	8'-2"	8'-1"	7'-11"
	0.036	9'-3"	9'-3"	9'-1"	9'-1"	9'-0"	8'-10"	8'-8"
42	0.018	3'-11"	3'-11"	3'-10"	3'-8"	3'-8"	3'-7"	3'-6"
	0.024	5'-7"	5'-7"	5'-7"	5'-7"	5'-7"	5'-6"	5'-5"
	0.032	7'-8"	7'-8"	7'-8"	7'-8"	7'-8"	7'-7"	7'-5"
	0.036	8'-5"	8'-5"	8'-5"	8'-5"	8'-5"	8'-3"	8'-2"
50	0.018	3'-6"	3'-6"	3'-6"	3'-5"	3'-5"	3'-4"	3'-3"
	0.024	5'-0"	5'-0"	5'-0"	5'-0"	5'-0"	4'-9"	4'-8"
	0.032	7'-0"	7'-0"	7'-0"	7'-0"	7'-0"	7'-0"	7'-0"
	0.036	7'-8"	7'-8"	7'-8"	7'-8"	7'-8"	7'-8"	7'-8"

TABLE 4.26

2"x6" Flat Panel (Multispan) Detail N2, C

Ground Snow Load (psf)	Panel Gauge (in)	Wind Speed and Exposure: Exposure B 100	Exposure B 110	Exposure B 115	Exposure C 100	Exposure C 105	Exposure C 110	Exposure C 115
10	0.018	10'-7"	10'-7"	10'-3"	10'-3"	9'-11"	9'-8"	9'-5"
	0.024	13'-2"	13'-2"	12'-11"	12'-11"	12'-8"	12'-5"	12'-3"
	0.032	14'-5"	14'-5"	14'-2"	14'-2"	13'-11"	13'-8"	13'-5"
	0.040	15'-6"	15'-6"	15'-2"	15'-2"	14'-11"	14'-8"	14'-5"
15	0.018	9'-5"	9'-5"	9'-5"	9'-2"	9'-0"	8'-9"	8'-7"
	0.024	12'-3"	12'-3"	12'-3"	12'-0"	11'-10"	11'-7"	11'-4"
	0.032	13'-5"	13'-5"	13'-5"	13'-2"	13'-0"	12'-10"	12'-7"
	0.040	14'-5"	14'-5"	14'-5"	14'-2"	13'-11"	13'-9"	13'-7"
20	0.018	8'-7"	8'-7"	8'-7"	8'-5"	8'-3"	8'-1"	7'-11"
	0.024	11'-4"	11'-4"	11'-4"	11'-1"	10'-10"	10'-8"	10'-6"
	0.032	12'-7"	12'-7"	12'-7"	12'-5"	12'-3"	12'-2"	12'-0"
	0.040	13'-7"	13'-7"	13'-7"	13'-4"	13'-2"	13'-0"	12'-10"
25	0.018	8'-7"	8'-7"	8'-5"	8'-3"	8'-1"	7'-11"	7'-11"
	0.024	11'-4"	11'-4"	11'-1"	10'-10"	10'-8"	10'-6"	10'-6"
	0.032	12'-7"	12'-7"	12'-5"	12'-3"	12'-2"	12'-0"	12'-0"
	0.040	13'-7"	13'-7"	13'-4"	13'-2"	13'-0"	12'-10"	12'-10"
30	0.018	7'-11"	7'-11"	7'-11"	7'-9"	7'-8"	7'-6"	7'-5"
	0.024	10'-6"	10'-6"	10'-6"	10'-3"	10'-1"	9'-11"	9'-9"
	0.032	12'-0"	12'-0"	12'-0"	11'-10"	11'-8"	11'-7"	11'-5"
	0.040	12'-10"	12'-10"	12'-10"	12'-9"	12'-7"	12'-5"	12'-4"
35.7	0.018	7'-6"	7'-6"	7'-5"	7'-5"	7'-3"	7'-2"	7'-1"
	0.024	9'-11"	9'-11"	9'-9"	9'-9"	9'-8"	9'-6"	9'-4"
	0.032	11'-7"	11'-7"	11'-5"	11'-5"	11'-4"	11'-3"	11'-1"
	0.040	12'-5"	12'-5"	12'-4"	12'-4"	12'-2"	12'-1"	11'-11"
42	0.018	6'-10"	6'-10"	6'-10"	6'-10"	6'-10"	6'-9"	6'-8"
	0.024	9'-1"	9'-1"	9'-1"	9'-1"	9'-1"	9'-0"	8'-10"
	0.032	10'-11"	10'-11"	10'-11"	10'-11"	10'-11"	10'-10"	10'-9"
	0.040	11'-9"	11'-9"	11'-9"	11'-9"	11'-9"	11'-8"	11'-6"
50	0.018	6'-4"	6'-4"	6'-4"	6'-4"	6'-4"	6'-4"	6'-4"
	0.024	8'-4"	8'-4"	8'-4"	8'-4"	8'-4"	8'-4"	8'-4"
	0.032	10'-4"	10'-4"	10'-4"	10'-4"	10'-4"	10'-4"	10'-4"
	0.040	11'-1"	11'-1"	11'-1"	11'-1"	11'-1"	11'-1"	11'-1"

TABLE 4.27

Registered Professional Engineer (Civil)
CERTIFICATE NO. 39702
CARL PUTNAM
Date Signed
ARIZONA U.S.A.
Expires 09/30/2024
JAN 20 2023

Headers	Panel Thickness (in)	100 MPH EXP B				105 MPH EXP B			110 MPH EXP B			100 MPH EXP C or 115 MPH EXP B					105 MPH EXP C or 120 MPH EXP B						110 MPH EXP C or 130 MPH EXP B						
		1	2	3	4	1	2	3	1	2	3	1	2	3	4	5	1	2	3	4	5	6	1	2	3	4	5	6	7
		Number of #10 Sheet Metal Screws Required per foot at Header/Panel Connection (Number of screws required per header for double headers)																											
Dble Headers	**0.018**	6'	MAX	MAX	MAX	5'	11'	MAX	5'	10'	MAX	4'	8'	MAX	MAX	MAX	4'	8'	MAX	MAX	MAX	MAX	3'	7'	10'	MAX	MAX	MAX	MAX
Single 3x8	**0.018**	3'	6'	9'	MAX	3'	5'	8'	2'	5'	7'	2'	4'	6'	8'	10'	2'	4'	6'	8'	9'	MAX	2'	3'	5'	7'	9'	10'	MAX
5.5" Alum Fascia	**0.018**	3'	6'	9'	MAX	3'	5'	8'	2'	5'	7'	2'	4'	6'	8'	10'	2'	4'	6'	8'	9'	MAX	2'	3'	5'	7'	9'	10'	MAX
All others	**0.018**	3'	6'	9'	MAX	3'	5'	8'	2'	5'	7'	2'	4'	6'	8'	10'	2'	4'	6'	8'	9'	MAX	2'	3'	5'	7'	9'	10'	MAX
Dble Headers	**0.024**	8'	MAX	MAX	MAX	7'	14'	MAX	6'	13'	MAX	6'	11'	MAX	MAX	MAX	5'	10'	MAX	MAX	MAX	MAX	5'	9'	14'	MAX	MAX	MAX	MAX
Single 3x8	**0.024**	4'	8'	12'	MAX	4'	7'	11'	3'	6'	10'	3'	6'	8'	11'	14'	3'	5'	8'	10'	13'	MAX	2'	5'	7'	9'	11'	14'	MAX
5.5" Alum Fascia	**0.024**	4'	8'	12'	MAX	4'	7'	11'	3'	6'	10'	3'	6'	8'	11'	14'	3'	5'	8'	10'	13'	MAX	2'	5'	7'	9'	11'	14'	MAX
All others	**0.024**	4'	8'	12'	MAX	4'	7'	11'	3'	6'	10'	3'	6'	8'	11'	14'	3'	5'	8'	10'	13'	MAX	2'	5'	7'	9'	11'	14'	MAX
Dble Headers	**0.032**	10'	MAX	MAX	MAX	9'	MAX	MAX	9'	17'	MAX	7'	15'	MAX	MAX	MAX	7'	13'	MAX	MAX	MAX	MAX	6'	12'	MAX	MAX	MAX	MAX	MAX
Single 3x8	**0.032**	5'	10'	16'	MAX	5'	9'	14'	4'	9'	13'	4'	7'	11'	15'	MAX	3'	7'	10'	13'	17'	MAX	3'	6'	9'	12'	15'	MAX	MAX
5.5" Alum Fascia	**0.032**	5'	10'	16'	MAX	5'	9'	14'	4'	9'	13'	4'	7'	11'	15'	MAX	3'	7'	10'	13'	17'	MAX	3'	6'	9'	12'	15'	MAX	MAX
All others	**0.032**	5'	10'	16'	MAX	5'	9'	14'	4'	9'	13'	4'	7'	11'	15'	MAX	3'	7'	10'	13'	17'	MAX	3'	6'	9'	12'	15'	MAX	MAX
Dble Headers	**0.036**	11'	MAX	MAX	MAX	10'	MAX	MAX	9'	17'	MAX	7'	15'	MAX	MAX	MAX	7'	14'	MAX	MAX	MAX	MAX	6'	12'	18'	MAX	MAX	MAX	MAX
Single 3x8	**0.036**	6'	11'	17'	MAX	5'	10'	15'	5'	9'	14'	4'	8'	12'	16'	MAX	4'	7'	11'	14'	18'	MAX	3'	6'	10'	13'	16'	MAX	MAX
5.5" Alum Fascia	**0.036**	6'	12'	18'	MAX	5'	11'	16'	5'	10'	15'	4'	8'	12'	17'	MAX	4'	8'	11'	15'	19'	MAX	3'	7'	10'	14'	17'	MAX	MAX
All others	**0.036**	6'	12'	18'	MAX	5'	11'	16'	5'	10'	15'	4'	8'	12'	17'	MAX	4'	8'	11'	15'	19'	MAX	3'	7'	10'	14'	17'	MAX	MAX

Table 4.36a Maximum Tributary Width for Each Header/Panel and Number of #10 Screw Combination

Headers	Panel Thickness (in)	100 MPH EXP B				105 MPH EXP B			110 MPH EXP B			100 MPH EXP C or 115 MPH EXP B					105 MPH EXP C or 120 MPH EXP B						110 MPH EXP C or 130 MPH EXP B					
		1	2	3	4	1	2	3	1	2	3	1	2	3	4	5	1	2	3	4	5	6	1	2	3	4	5	6
		Number of #14 Sheet Metal Screws Required per foot at Header/Panel Connection (Number of screws required per header for double headers)																										
Dble Headers	**0.018**	MAX	MAX	MAX	MAX	10'	MAX	MAX	9'	MAX	MAX	8'	MAX	MAX	MAX	MAX	7'	MAX	MAX	MAX	MAX	MAX	6'	MAX	MAX	MAX	MAX	MAX
Single 3x8	**0.018**	6'	MAX	MAX	MAX	5'	10'	MAX	5'	9'	MAX	4'	8'	MAX	MAX	MAX	4'	7'	11'	MAX	MAX	MAX	3'	6'	10'	MAX	MAX	MAX
5.5" Alum Fascia	**0.018**	6'	MAX	MAX	MAX	5'	10'	MAX	5'	9'	MAX	4'	8'	MAX	MAX	MAX	4'	7'	11'	MAX	MAX	MAX	3'	6'	10'	MAX	MAX	MAX
All others	**0.018**	6'	MAX	MAX	MAX	5'	10'	MAX	5'	9'	MAX	4'	8'	MAX	MAX	MAX	4'	7'	11'	MAX	MAX	MAX	3'	6'	10'	MAX	MAX	MAX
Dble Headers	**0.024**	14'	MAX	MAX	MAX	13'	MAX	MAX	11'	MAX	MAX	10'	MAX	MAX	MAX	MAX	9'	MAX	MAX	MAX	MAX	MAX	8'	MAX	MAX	MAX	MAX	MAX
Single 3x8	**0.024**	7'	15'	MAX	MAX	7'	13'	MAX	6'	12'	MAX	5'	10'	MAX	MAX	MAX	5'	9'	14'	MAX	MAX	MAX	4'	9'	13'	MAX	MAX	MAX
5.5" Alum Fascia	**0.024**	7'	15'	MAX	MAX	7'	13'	MAX	6'	12'	MAX	5'	10'	MAX	MAX	MAX	5'	9'	14'	MAX	MAX	MAX	4'	9'	13'	MAX	MAX	MAX
All others	**0.024**	7'	15'	MAX	MAX	7'	13'	MAX	6'	12'	MAX	5'	10'	MAX	MAX	MAX	5'	9'	14'	MAX	MAX	MAX	4'	9'	13'	MAX	MAX	MAX
Dble Headers	**0.032**	14'	MAX	MAX	MAX	13'	MAX	MAX	11'	MAX	MAX	10'	MAX	MAX	MAX	MAX	9'	18'	MAX	MAX	MAX	MAX	8'	16'	MAX	MAX	MAX	MAX
Single 3x8	**0.032**	7'	15'	MAX	MAX	7'	13'	MAX	6'	12'	MAX	5'	10'	16'	MAX	MAX	5'	9'	14'	MAX	MAX	MAX	4'	9'	13'	17'	MAX	MAX
5.5" Alum Fascia	**0.032**	10'	MAX	MAX	MAX	9'	18'	MAX	8'	16'	MAX	7'	14'	MAX	MAX	MAX	6'	13'	MAX	MAX	MAX	MAX	6'	11'	17'	MAX	MAX	MAX
All others	**0.032**	10'	MAX	MAX	MAX	9'	18'	MAX	8'	16'	MAX	7'	14'	MAX	MAX	MAX	6'	13'	MAX	MAX	MAX	MAX	6'	11'	17'	MAX	MAX	MAX
Dble Headers	**0.036**	14'	MAX	MAX	MAX	13'	MAX	MAX	11'	MAX	MAX	10'	MAX	MAX	MAX	MAX	9'	18'	MAX	MAX	MAX	MAX	8'	16'	MAX	MAX	MAX	MAX
Single 3x8	**0.036**	7'	15'	MAX	MAX	7'	13'	MAX	6'	12'	18'	5'	10'	16'	MAX	MAX	5'	9'	14'	19'	MAX	MAX	4'	9'	13'	17'	MAX	MAX
5.5" Alum Fascia	**0.036**	10'	MAX	MAX	MAX	9'	18'	MAX	8'	17'	MAX	7'	14'	MAX	MAX	MAX	6'	13'	MAX	MAX	MAX	MAX	6'	12'	18'	MAX	MAX	MAX
All others	**0.036**	11'	MAX	MAX	MAX	10'	MAX	MAX	9'	18'	MAX	8'	16'	MAX	MAX	MAX	7'	14'	MAX	MAX	MAX	MAX	6'	13'	MAX	MAX	MAX	MAX

Table 4.37a Maximum Tributary Width for Each Header/Panel and Number of #14 Screw Combination

Amerimax Exterior Home Products
28921 US Hwy 74
Romoland, CA 92585

Carl Putnam, P. E.
3441 Ivylink Place
Lynchburg, VA 24503
(434) 384-2514
carlputnam@comcast.net

Registered Professional Engineer (Civil) CERTIFICATE NO. 39702 CARL PUTNAM Date Signed ARIZONA U.S.A. Expires 09/30/2024

JAN 20 2023

Headers	Panel Thickness (in)	115 MPH EXP C or 130 MPH EXP B				120 MPH EXP C or 140 MPH EXP B			130 MPH EXP C or 150 MPH EXP B			140 MPH EXP C or 160 MPH EXP B					150 MPH EXP C or 170 MPH EXP B						160 MPH EXP C or 170 MPH EXP B						
		1	2	3	4	1	2	3	1	2	3	1	2	3	4	5	1	2	3	4	5	6	1	2	3	4	5	6	7
		Number of #10 Sheet Metal Screws Required per foot at Header/Panel Connection (Number of screws required per header for double headers)																											
Dble Headers	0.018	3'	6'	9'	MAX	3'	6'	9'	2'	5'	7'	2'	4'	6'	8'	10'	2'	4'	5'	7'	9'	11'	2'	3'	5'	6'	8'	10'	MAX
Single 3x8	0.018	2'	3'	5'	6'	1'	3'	4'	1'	2'	4'	1'	2'	3'	4'	5'	1'	2'	3'	4'	5'	5'	1'	2'	2'	3'	4'	5'	6'
5.5" Alum Fascia	0.018	2'	3'	5'	6'	1'	3'	4'	1'	2'	4'	1'	2'	3'	4'	5'	1'	2'	3'	4'	5'	5'	1'	2'	2'	3'	4'	5'	6'
All others	0.018	2'	3'	5'	6'	1'	3'	4'	1'	2'	4'	1'	2'	3'	4'	5'	1'	2'	3'	4'	5'	5'	1'	2'	2'	3'	4'	5'	6'
Dble Headers	0.024	4'	8'	12'	MAX	4'	8'	11'	3'	6'	10'	3'	6'	8'	11'	14'	2'	5'	7'	10'	12'	15'	2'	4'	6'	8'	11'	13'	15'
Single 3x8	0.024	2'	4'	6'	8'	2'	4'	6'	2'	3'	5'	1'	3'	4'	6'	7'	1'	2'	4'	5'	6'	7'	1'	2'	3'	4'	5'	6'	7'
5.5" Alum Fascia	0.024	2'	4'	6'	8'	2'	4'	6'	2'	3'	5'	1'	3'	4'	6'	7'	1'	2'	4'	5'	6'	7'	1'	2'	3'	4'	5'	6'	7'
All others	0.024	2'	4'	6'	8'	2'	4'	6'	2'	3'	5'	1'	3'	4'	6'	7'	1'	2'	4'	5'	6'	7'	1'	2'	3'	4'	5'	6'	7'
Dble Headers	0.032	6'	11'	17'	MAX	5'	10'	15'	4'	9'	13'	4'	7'	11'	15'	MAX	3'	6'	10'	13'	16'	MAX	3'	6'	8'	11'	14'	17'	MAX
Single 3x8	0.032	3'	6'	8'	11'	3'	5'	8'	2'	4'	6'	2'	4'	6'	7'	9'	2'	3'	5'	6'	8'	10'	1'	3'	4'	6'	7'	8'	10'
5.5" Alum Fascia	0.032	3'	6'	8'	11'	3'	5'	8'	2'	4'	6'	2'	4'	6'	7'	9'	2'	3'	5'	6'	8'	10'	1'	3'	4'	6'	7'	8'	10'
All others	0.032	3'	6'	8'	11'	3'	5'	8'	2'	4'	6'	2'	4'	6'	7'	9'	2'	3'	5'	6'	8'	10'	1'	3'	4'	6'	7'	8'	10'
Dble Headers	0.036	6'	11'	17'	MAX	5'	10'	15'	4'	9'	13'	4'	8'	11'	15'	19'	3'	7'	10'	13'	16'	MAX	3'	6'	9'	11'	14'	17'	MAX
Single 3x8	0.036	3'	6'	9'	12'	3'	5'	8'	2'	5'	7'	2'	4'	6'	8'	10'	2'	3'	5'	7'	9'	10'	2'	3'	5'	6'	8'	9'	11'
5.5" Alum Fascia	0.036	3'	6'	9'	12'	3'	6'	9'	2'	5'	7'	2'	4'	6'	8'	10'	2'	4'	5'	7'	9'	11'	2'	3'	5'	6'	8'	10'	11'
All others	0.036	3'	6'	9'	12'	3'	6'	9'	2'	5'	7'	2'	4'	6'	8'	10'	2'	4'	5'	7'	9'	11'	2'	3'	5'	6'	8'	10'	11'

Table 4.36b Maximum Tributary Width for Each Header/Panel and Number of #10 Screw Combination

Headers	Panel Thickness (in)	115 MPH EXP C or 130 MPH EXP B				120 MPH EXP C or 140 MPH EXP B			130 MPH EXP C or 150 MPH EXP B			140 MPH EXP C or 160 MPH EXP B					150 MPH EXP C or 170 MPH EXP B						160 MPH EXP C or 170 MPH EXP B					
		1	2	3	4	1	2	3	1	2	3	1	2	3	4	5	1	2	3	4	5	6	1	2	3	4	5	6
		Number of #14 Sheet Metal Screws Required per foot at Header/Panel Connection (Number of screws required per header for double headers)																										
Dble Headers	0.018	6'	MAX	MAX	MAX	5'	11'	MAX	5'	9'	MAX	4'	8'	MAX	MAX	MAX	3'	7'	10'	MAX	MAX	MAX	3'	6'	9'	MAX	MAX	MAX
Single 3x8	0.018	3'	6'	9'	MAX	3'	5'	8'	2'	5'	7'	2'	4'	6'	8'	10'	2'	3'	5'	7'	9'	10'	2'	3'	5'	6'	8'	9'
5.5" Alum Fascia	0.018	3'	6'	9'	MAX	3'	5'	8'	2'	5'	7'	2'	4'	6'	8'	10'	2'	3'	5'	7'	9'	10'	2'	3'	5'	6'	8'	9'
All others	0.018	3'	6'	9'	MAX	3'	5'	8'	2'	5'	7'	2'	4'	6'	8'	10'	2'	3'	5'	7'	9'	10'	2'	3'	5'	6'	8'	9'
Dble Headers	0.024	7'	15'	MAX	MAX	7'	14'	MAX	6'	12'	MAX	5'	10'	15'	MAX	MAX	4'	9'	13'	MAX	MAX	MAX	4'	8'	11'	MAX	MAX	MAX
Single 3x8	0.024	4'	8'	12'	MAX	4'	7'	11'	3'	6'	9'	3'	5'	8'	10'	13'	2'	5'	7'	9'	11'	14'	2'	4'	6'	8'	10'	12'
5.5" Alum Fascia	0.024	4'	8'	12'	MAX	4'	7'	11'	3'	6'	9'	3'	5'	8'	10'	13'	2'	5'	7'	9'	11'	14'	2'	4'	6'	8'	10'	12'
All others	0.024	4'	8'	12'	MAX	4'	7'	11'	3'	6'	9'	3'	5'	8'	10'	13'	2'	5'	7'	9'	11'	14'	2'	4'	6'	8'	10'	12'
Dble Headers	0.032	7'	15'	MAX	MAX	7'	14'	MAX	6'	12'	17'	5'	10'	15'	MAX	MAX	4'	9'	13'	17'	MAX	MAX	4'	8'	11'	15'	MAX	MAX
Single 3x8	0.032	4'	8'	12'	16'	4'	7'	11'	3'	6'	9'	3'	5'	8'	10'	13'	2'	5'	7'	9'	11'	14'	2'	4'	6'	8'	10'	12'
5.5" Alum Fascia	0.032	5'	10'	16'	MAX	5'	10'	14'	4'	8'	12'	3'	7'	10'	14'	17'	3'	6'	9'	12'	15'	MAX	3'	5'	8'	11'	13'	16'
All others	0.032	5'	10'	16'	MAX	5'	10'	14'	4'	8'	12'	3'	7'	10'	14'	17'	3'	6'	9'	12'	15'	MAX	3'	5'	8'	11'	13'	16'
Dble Headers	0.036	7'	15'	MAX	MAX	7'	14'	MAX	6'	12'	17'	5'	10'	15'	MAX	MAX	4'	9'	13'	17'	MAX	MAX	4'	8'	11'	15'	19'	MAX
Single 3x8	0.036	4'	8'	12'	16'	4'	7'	11'	3'	6'	9'	3'	5'	8'	10'	13'	2'	5'	7'	9'	11'	14'	2'	4'	6'	8'	10'	12'
5.5" Alum Fascia	0.036	5'	11'	16'	MAX	5'	10'	15'	4'	8'	13'	4'	7'	11'	14'	18'	3'	6'	9'	13'	16'	19'	3'	5'	8'	11'	14'	16'
All others	0.036	6'	12'	18'	MAX	5'	11'	16'	5'	9'	14'	4'	8'	12'	16'	MAX	3'	7'	10'	14'	17'	MAX	3'	6'	9'	12'	15'	18'

Table 4.37b Maximum Tributary Width for Each Header/Panel and Number of #14 Screw Combination

Amerimax Exterior Home Products
28921 US Hwy 74
Romoland, CA 92585

Carl Putnam, P. E.
3441 Ivylink Place
Lynchburg, VA 24503
(434) 384-2514
carlputnam@comcast.net

Registered Professional Engineer (Civil)
CERTIFICATE NO. 39702
CARL PUTNAM
Date Signed
ARIZONA U.S.A.
Expires 09/30/2024

JAN 20 2023

SECTION 5.0 POST SPACING, POST TYPE AND FOOTING SIZE FOR SOLID COVERS

Roof Solidity: 100%

Ground Snow Load: 10 psf   Live Load: 10 psf   Wind Speed: 95 MPH EXPOSURE C or 110 MPH EXPOSURE B   Seismic Ss= 150%   Seismic Design Category D   Structures are Attached to Existing Building

Table 5.1a (cubic footing "d"; Uplift Footing (in); Constrained Footing (in) by Max Post Length 8', 10', 12')

Header	Detail	trib 3'	Min Post Type	Uplift Footing (in)	8'	10'	12'	trib 3.5'	Min Post Type	Uplift Footing (in)	8'	10'	12'	trib 4'	Min Post Type	Uplift Footing (in)	8'	10'	12'	trib 4.5'	Min Post Type	Uplift Footing (in)	8'	10'	12'
On Slab	On Slab	22'-8"	A3					19'-5"	A3					17'-0"	A3					15'-1"	A3				
0.042"x3"x8"	N30	12'-4"	A1	22	17	18	19	11'-3"	A1	22	18	19	20	10'-5"	A1	22	19	20	21	9'-8"	A1	23	19	20	21
Double 3"x8"	N25	18'-0"	A1	25	18	20	21	16'-7"	A2	25	19	20	21	15'-5"	A2	26	19	20	21	14'-5"	A2	26	19	21	21
Double 2"x6.625"	N25	16'-0"	A1	24	18	19	20	14'-9"	A1	24	18	19	20	13'-9"	A1	25	19	20	21	12'-11"	A2	25	19	20	21
5.5" Extruded Fascia	L	15'-6"	A1	23	18	19	20	14'-3"	A1	24	18	19	20	13'-2"	A1	24	19	20	21	12'-4"	A1	25	19	20	21
California Fascia	N10, G	13'-8"	A1	22	17	18	19	12'-6"	A1	23	18	19	20	11'-7"	A1	23	19	20	21	10'-9"	A1	24	19	20	21
Classic Fascia	H	22'-8"	A3	26	20	21	22	21'-0"	A3	27	20	21	22	19'-7"	A3	28	20	22	23	18'-6"	C	28	21	22	23
16 G Steel C	N9, T	21'-2"	A2	26	19	20	21	19'-1"	A3	26	20	21	22	17'-6"	A3	27	20	21	22	16'-1"	A3	27	20	21	22
14 G Steel C	N9, T	25'-3"	A3	27	20	21	22	22'-11"	B	28	20	22	23	21'-0"	C	28	21	22	23	19'-6"	C	29	21	22	23
12 G Steel C	N9, T	36'-5"	E	31	22	23	25	33'-3"	E	32	22	24	25	30'-9"	E	32	23	24	25	28'-8"	E	33	23	24	26
Double 16 G Steel C	N9, N25, T	35'-4"	E	31	22	23	24	32'-8"	E	31	22	24	25	30'-5"	E	32	23	24	25	28'-8"	E	33	23	24	26
Double 14 G Steel C	N9, N25, T	40'-0"	E	32	23	24	25	37'-6"	E	33	23	25	26	35'-0"	E	34	24	25	26	33'-0"	F	34	24	25	27
Double 12 G Steel C	N9, N25, T	40'-0"	E	32	23	24	25	40'-0"	E	34	24	25	26	40'-0"	G	35	24	26	27	40'-0"	G	37	25	27	28
Steel Cloverleaf	W	12'-1"	A1	21	17	18	19	11'-0"	A1	22	18	19	20	10'-2"	A1	22	19	20	21	9'-5"	A1	23	19	20	21
DBL Steel Cloverleaf	AA	18'-5"	A1	25	19	20	21	17'-1"	A2	25	19	20	21	15'-11"	A2	26	19	20	21	15'-0"	A3	26	20	21	22
4x3 I Beam	Y	11'-1"	A1	21	17	18	19	10'-9"	A1	22	18	19	20	10'-4"	A1	22	19	20	21	10'-1"	A1	23	19	20	21
7x4 I Beam	Q	15'-8"	A1	23	18	19	20	15'-3"	A1	24	18	19	20	14'-8"	A2	25	19	20	21	14'-4"	A2	26	19	20	21

Header	Detail	trib 5'	Min Post Type	Uplift Footing (in)	8'	10'	12'	trib 5.5'	Min Post Type	Uplift Footing (in)	8'	10'	12'	trib 6'	Min Post Type	Uplift Footing (in)	8'	10'	12'	trib 6.5'	Min Post Type	Uplift Footing (in)	8'	10'	12'
On Slab	On Slab	13'-7"	A3					12'-4"	A3					11'-4"	A3					10'-5"	A1				
0.042"x3"x8"	N30	9'-1"	A1	23	20	21	22	8'-7"	A1	23	20	21	22	8'-1"	A1	24	21	22	23	7'-8"	A1	24	21	22	23
Double 3"x8"	N25	13'-8"	A3	26	20	21	22	12'-11"	A3	27	20	21	22	12'-4"	A3	27	21	22	23	11'-9"	A3	28	21	22	23
Double 2"x6.625"	N25	12'-2"	A2	26	20	21	22	11'-7"	A2	26	20	21	22	11'-0"	A2	26	21	22	23	10'-7"	A3	27	21	22	23
5.5" Extruded Fascia	L	11'-8"	A2	25	20	21	22	11'-0"	A2	25	20	21	22	10'-6"	A2	26	21	22	23	10'-0"	A2	26	21	22	23
California Fascia	N10, G	10'-2"	A1	24	20	21	22	9'-7"	A1	24	20	21	22	9'-1"	A1	25	21	22	23	8'-7"	A2	25	21	22	23
Classic Fascia	H	17'-6"	C	29	21	22	23	16'-9"	D	29	21	22	23	16'-0"	D	30	21	23	24	15'-4"	D	30	22	23	24
16 G Steel C	N9, T	15'-0"	A3	27	20	21	22	14'-0"	A3	28	20	21	22	13'-2"	B	28	21	22	23	12'-6"	C	28	21	22	23
14 G Steel C	N9, T	18'-2"	C	29	21	22	23	17'-1"	D	29	21	23	24	16'-1"	D	30	21	23	24	15'-3"	D	30	22	23	24
12 G Steel C	N9, T	26'-10"	E	33	23	25	26	25'-4"	E	34	24	25	26	24'-0"	F	34	24	25	26	22'-10"	F	34	24	25	27
Double 16 G Steel C	N9, N25, T	27'-1"	E	33	23	25	26	25'-10"	F	34	24	25	26	24'-8"	F	34	24	25	27	23'-8"	F	35	24	26	27
Double 14 G Steel C	N9, N25, T	31'-3"	G	35	24	26	27	29'-9"	G	35	25	26	27	28'-6"	G	36	25	26	27	27'-4"	G	36	25	27	28
Double 12 G Steel C	N9, N25, T	40'-0"	H1	38	26	27	29	39'-4"	H1	39	26	28	29	37'-8"	H1	39	27	28	30	36'-2"	H1	40	27	28	30
Steel Cloverleaf	W	8'-10"	A1	23	20	21	22	8'-4"	A1	23	20	21	22	7'-10"	A1	23	21	22	23	7'-6"	A1	24	21	22	23
DBL Steel Cloverleaf	AA	14'-3"	A3	27	20	21	22	13'-7"	A3	27	20	21	22	13'-0"	A3	28	21	22	23	12'-6"	C	28	21	22	23
4x3 I Beam	Y	9'-10"	A1	24	20	21	22	9'-7"	A1	24	20	21	22	9'-5"	A2	25	21	22	23	9'-2"	A2	25	21	22	23
7x4 I Beam	Q	13'-11"	A3	27	20	21	22	13'-7"	A3	27	20	21	22	13'-3"	B	28	21	22	23	13'-0"	C	28	21	22	23

Header	Detail	trib 7'	Min Post Type	Uplift Footing (in)	8'	10'	12'	trib 7.5'	Min Post Type	Uplift Footing (in)	8'	10'	12'	trib 8'	Min Post Type	Uplift Footing (in)	8'	10'	12'
On Slab	On Slab	9'-8"	A3					9'-1"	A3					8'-6"	A3				
0.042"x3"x8"	N30	7'-5"	A1	24	21	23	24	7'-1"	A1	24	22	23	24	6'-9"	A1	25	22	23	25
Double 3"x8"	N25	11'-4"	B	28	21	23	24	10'-11"	C	28	22	23	24	10'-6"	C	28	22	23	25
Double 2"x6.625"	N25	10'-3"	A3	27	21	23	24	9'-10"	A3	27	22	23	24	9'-6"	A3	27	22	23	25
5.5" Extruded Fascia	L	9'-8"	A3	26	21	23	24	9'-3"	A3	27	22	23	24	8'-11"	A3	27	22	23	25
California Fascia	N10, G	8'-4"	A2	25	21	23	24	7'-11"	A2	25	22	23	24	7'-8"	A2	26	22	23	25
Classic Fascia	H	14'-11"	D	31	22	23	24	14'-5"	E	31	22	23	24	14'-0"	E	31	22	24	25
16 G Steel C	N9, T	12'-0"	C	28	21	23	24	11'-5"	C	29	22	23	24	10'-10"	C	29	22	23	25
14 G Steel C	N9, T	14'-8"	D	30	22	23	24	13'-11"	D	31	22	23	24	13'-4"	E	31	22	23	25
12 G Steel C	N9, T	22'-1"	F	35	24	26	27	21'-2"	G	35	24	26	27	20'-3"	G	35	24	26	27
Double 16 G Steel C	N9, N25, T	22'-11"	G	35	24	26	27	22'-1"	G	36	25	26	27	21'-4"	G	36	25	26	27
Double 14 G Steel C	N9, N25, T	26'-7"	G	37	25	27	28	25'-7"	G	37	26	27	28	24'-9"	H1	38	26	27	29
Double 12 G Steel C	N9, N25, T	35'-2"	H1	41	27	29	30	33'-11"	H1	41	27	29	30	32'-10"	H1	42	28	29	31
Steel Cloverleaf	W	7'-2"	A1	24	21	23	24	6'-11"	A1	24	22	23	24	6'-7"	A1	24	22	23	25
DBL Steel Cloverleaf	AA	12'-2"	C	29	21	23	24	11'-8"	C	29	22	23	24	11'-4"	C	29	22	23	25
4x3 I Beam	Y	9'-0"	A2	26	21	23	24	8'-10"	A3	26	22	23	24	8'-9"	A3	27	22	23	25
7x4 I Beam	Q	12'-9"	C	29	21	23	24	12'-6"	D	30	22	23	24	12'-4"	D	30	22	23	25

Header	Detail	trib 9'	Min Post Type	Uplift Footing (in)	8'	10'	12'	trib 10'	Min Post Type	Uplift Footing (in)	8'	10'	12'	trib 11'	Min Post Type	Uplift Footing (in)	8'	10'	12'	trib 12'	Min Post Type	Uplift Footing (in)	8'	10'	12'
On Slab	On Slab	7'-6"	A3					6'-9"	A3					6'-2"	A3					5'-8"	A3				
0.042"x3"x8"	N30	6'-3"	A2	25	23	24	25	5'-9"	A2	25	23	25	26	5'-5"	A2	25	24	25	27	5'-1"	A2	26	25	26	27
Double 3"x8"	N25	9'-9"	C	29	23	24	25	9'-2"	D	29	23	25	26	8'-7"	D	30	24	25	27	8'-2"	D	30	25	26	27
Double 2"x6.625"	N25	8'-10"	B	28	23	24	25	8'-4"	C	28	23	25	26	7'-10"	C	29	24	25	27	7'-5"	C	29	25	26	27
5.5" Extruded Fascia	L	8'-4"	A3	27	23	24	25	7'-9"	A3	28	23	25	26	7'-4"	C	28	24	25	27	6'-11"	C	28	25	26	27
California Fascia	N10, G	7'-1"	A2	26	23	24	25	6'-7"	A2	26	23	25	26	6'-2"	A3	26	24	25	27	5'-10"	A3	27	25	26	27
Classic Fascia	H	13'-2"	E	32	23	24	25	12'-6"	E	32	23	25	26	11'-10"	E	33	24	25	27	11'-4"	E	33	25	26	27
16 G Steel C	N9, T	9'-11"	C	29	23	24	25	9'-1"	C	29	23	25	26	8'-3"	C	29	24	25	27	7'-6"	C	29	25	26	27
14 G Steel C	N9, T	12'-3"	E	31	23	24	25	11'-4"	E	31	23	25	26	10'-7"	E	32	24	25	27	9'-11"	E	32	25	26	27
12 G Steel C	N9, T	18'-9"	G	36	25	26	27	17'-6"	G	36	25	26	28	16'-6"	G	37	25	27	28	15'-7"	G	37	25	27	28
Double 16 G Steel C	N9, N25, T	20'-0"	G	37	25	27	28	18'-11"	G	37	25	27	28	17'-11"	H1	38	26	27	29	17'-1"	H1	38	26	28	29
Double 14 G Steel C	N9, N25, T	23'-3"	H1	39	26	28	29	22'-0"	H1	39	26	28	29	20'-11"	H1	40	27	28	30	20'-0"	H1	40	27	29	30
Double 12 G Steel C	N9, N25, T	30'-11"	H2	42	28	30	31	29'-4"	H2	43	28	30	32	27'-11"	H2	44	29	30	32	26'-8"	H2	44	29	31	32
Steel Cloverleaf	W	6'-1"	A1	25	23	24	25	5'-8"	A2	25	23	25	26	5'-4"	A2	25	24	25	27	5'-0"	A2	25	25	26	27
DBL Steel Cloverleaf	AA	10'-8"	D	30	23	24	25	10'-1"	D	30	23	25	26	9'-7"	E	31	24	25	27	9'-2"	E	31	25	26	27
4x3 I Beam	Y	8'-3"	A3	27	23	24	25	7'-10"	A3	28	23	25	26	7'-5"	C	28	24	25	27	6'-11"	C	28	25	26	27
7x4 I Beam	Q	12'-0"	E	31	23	24	25	11'-8"	E	32	23	25	26	11'-5"	E	33	24	25	27	11'-0"	E	33	25	26	27

Header	Detail	trib 13'	Min Post Type	Uplift Footing (in)	8'	10'	12'	trib 14'	Min Post Type	Uplift Footing (in)	8'	10'	12'	trib 15'	Min Post Type	Uplift Footing (in)	8'	10'	12'	trib 16'	Min Post Type	Uplift Footing (in)	8'	10'	12'
On Slab	On Slab	5'-2"	A3					4'-10"	A3					4'-6"	A3					4'-3"	A3				
0.042"x3"x8"	N30	4'-9"	A2	26	25	27	28	4'-6"	A2	26	26	27	28	4'-3"	A2	26	26	28	29	4'-1"	A2	26	26	28	29
Double 3"x8"	N25	7'-9"	D	30	25	27	28	7'-5"	D	31	26	27	28	7'-1"	E	31	26	28	29	6'-9"	E	31	26	28	29
Double 2"x6.625"	N25	7'-1"	D	29	25	27	28	6'-10"	D	30	26	27	28	6'-6"	D	30	26	28	29	6'-3"	D	30	26	28	29
5.5" Extruded Fascia	L	6'-7"	C	29	25	27	28	6'-4"	C	29	26	27	28	6'-0"	C	29	26	28	29	5'-9"	D	29	26	28	29
California Fascia	N10, G	5'-6"	A3	27	25	27	28	5'-3"	A3	27	26	27	28	5'-0"	A3	27	26	28	29	4'-9"	A3	28	26	28	29
Classic Fascia	H	10'-11"	F	34	25	27	28	10'-7"	F	34	26	27	28	10'-2"	F	35	26	28	29	9'-10"	G	35	26	28	29
16 G Steel C	N9, T	6'-11"	C	29	25	27	28	6'-6"	D	29	26	27	28	6'-1"	C	29	26	28	29	5'-8"	C	29	26	28	29
14 G Steel C	N9, T	9'-4"	E	32	25	27	28	8'-9"	E	32	26	27	28	8'-2"	E	32	26	28	29	7'-8"	E	32	26	28	29
12 G Steel C	N9, T	14'-9"	G	37	26	27	28	14'-1"	H1	38	26	27	29	13'-5"	H1	38	26	28	29	12'-10"	H1	38	26	28	29
Double 16 G Steel C	N9, N25, T	16'-4"	H1	39	26	28	29	15'-9"	H1	39	26	28	29	15'-2"	H1	40	27	28	30	14'-7"	H1	40	27	28	30
Double 14 G Steel C	N9, N25, T	19'-2"	H1	41	27	29	30	18'-6"	H1	41	28	29	31	17'-10"	H1	42	28	29	31	17'-3"	H2	42	28	30	31
Double 12 G Steel C	N9, N25, T	25'-8"	H3	45	29	31	33	24'-10"	H3	46	30	31	33	23'-11"	H3	46	30	32	33	23'-2"	H3	47	30	32	33
Steel Cloverleaf	W	4'-8"	A2	26	25	27	28	4'-6"	A2	26	26	27	28	4'-3"	A2	26	26	28	29	4'-1"	A2	26	26	28	29
DBL Steel Cloverleaf	AA	8'-10"	E	32	25	27	28	8'-6"	E	32	26	27	28	8'-3"	E	32	26	28	29	7'-11"	E	33	26	28	29
4x3 I Beam	Y	6'-6"	C	28	25	27	28	6'-2"	C	29	26	27	28	5'-10"	C	29	26	28	29	5'-6"	C	29	26	28	29
7x4 I Beam	Q	10'-4"	E	33	25	27	28	9'-9"	E	33	26	27	28	9'-3"	E	34	26	28	29	8'-9"	E	34	26	28	29

Header	Detail	trib 17'	Min Post Type	Uplift Footing (in)	8'	10'	12'	trib 18'	Min Post Type	Uplift Footing (in)	8'	10'	12'
On Slab	On Slab	4'-0"	A3					3'-9"	A3				
0.042"x3"x8"	N30	3'-10"	A2	26	27	28	30	3'-8"	A3	26	27	29	30
Double 3"x8"	N25	6'-6"	E	31	27	28	30	6'-3"	E	31	27	29	30
Double 2"x6.625"	N25	6'-0"	D	30	27	28	30	5'-10"	D	31	27	29	30
5.5" Extruded Fascia	L	5'-7"	D	30	27	28	30	5'-4"	D	30	27	29	30
California Fascia	N10, G	4'-6"	A3	28	27	28	30	4'-4"	A3	28	27	29	30
Classic Fascia	H	9'-7"	G	35	27	28	30	9'-3"	G	36	27	29	30
16 G Steel C	N9, T	5'-4"	C	29	27	28	30	5'-0"	C	29	27	29	30
14 G Steel C	N9, T	7'-2"	E	32	27	28	30	6'-10"	E	32	27	29	30
12 G Steel C	N9, T	12'-4"	H1	39	27	28	30	11'-10"	H1	39	27	29	30
Double 16 G Steel C	N9, N25, T	14'-1"	H1	40	27	29	30	13'-8"	H1	41	27	29	30
Double 14 G Steel C	N9, N25, T	16'-8"	H2	43	28	30	31	16'-2"	H2	43	28	30	31
Double 12 G Steel C	N9, N25, T	22'-5"	H3	47	30	32	34	21'-10"	H3	47	31	32	34
Steel Cloverleaf	W	3'-11"	A3	26	27	28	30	3'-9"	A3	26	27	29	30
DBL Steel Cloverleaf	AA	7'-8"	E	33	27	28	30	7'-6"	E	33	27	29	30
4x3 I Beam	Y	5'-3"	C	29	27	28	30	5'-0"	C	29	27	29	30
7x4 I Beam	Q	8'-4"	F	34	27	28	30	7'-11"	F	34	27	29	30

Ground Snow Load: 10 psf   Live Load: 10 psf   Wind Speed: 95 MPH EXPOSURE C or 115 MPH EXPOSURE B   Seismic Ss= 150%   Seismic Design Category D   Freestanding Structures

Table 5.1b (cubic footing "d"; Uplift Footing (in); Constrained Footing (in) by Max Post Length 8', 10', 12')

Header	Detail	trib 3'	Min Post Type	Uplift Footing (in)	8'	10'	12'	trib 3.5'	Min Post Type	Uplift Footing (in)	8'	10'	12'	trib 4'	Min Post Type	Uplift Footing (in)	8'	10'	12'	trib 4.5'	Min Post Type	Uplift Footing (in)	8'	10'	12'
On Slab	On Slab	n/a	A3					n/a	A3					n/a	A3					n/a	A3				
0.042"x3"x8"	N30	12'-0"	A1	19	25	27	28	11'-0"	A1	19	25	26	27	10'-2"	A1	20	24	25	27	9'-6"	A1	20	24	25	26
Double 3"x8"	N25	17'-8"	A1	21	28	29	31	16'-3"	A2	22	27	29	30	15'-2"	A2	22	27	28	29	14'-3"	A2	23	26	28	29
Double 2"x6.625"	N25	15'-8"	A1	21	26	27	28	14'-6"	A1	21	25	27	28	13'-6"	A1	22	25	26	27	12'-8"	A2	22	24	26	27
5.5" Extruded Fascia	L	15'-2"	A1	20	24	26	27	13'-11"	A1	21	24	25	26	13'-0"	A1	21	23	25	26	12'-2"	A2	22	23	24	25
California Fascia	N10, G	13'-4"	A1	20	22	24	25	12'-3"	A1	20	22	23	24	11'-4"	A1	20	22	23	24	10'-7"	A1	21	21	22	23
Classic Fascia	H	22'-2"	A3	23	27	28	30	20'-7"	A3	24	26	28	29	19'-4"	B	24	26	28	29	18'-3"	C	25	26	27	28
16 G Steel C	N9, T	20'-7"	A2	23	29	30	32	18'-8"	A3	23	28	30	31	17'-1"	A3	23	27	29	30	15'-10"	A3	24	27	28	30
14 G Steel C	N9, T	24'-8"	A3	24	30	32	33	22'-5"	C	24	29	31	33	20'-7"	C	25	29	30	32	19'-2"	C	25	28	30	31
12 G Steel C	N9, T	35'-7"	E	27	33	35	37	32'-7"	E	28	32	34	36	30'-2"	E	28	32	33	35	28'-2"	E	29	31	33	34
Double 16 G Steel C	N9, N25, T	34'-7"	E	27	33	35	36	32'-0"	E	27	32	34	36	30'-0"	E	28	32	33	35	28'-3"	E	29	31	33	34
Double 14 G Steel C	N9, N25, T	39'-8"	E	28	34	36	38	36'-10"	E	29	33	35	37	34'-6"	F	29	33	35	36	32'-6"	F	30	32	34	36
Double 12 G Steel C	N9, N25, T	40'-0"	E	28	34	36	38	40'-0"	F	30	34	36	38	40'-0"	G	31	34	36	38	40'-0"	G	32	34	36	38
Steel Cloverleaf	W	11'-10"	A1	19	19	21	22	10'-10"	A1	19	19	20	21	10'-0"	A1	19	19	20	21	9'-3"	A1	20	18	20	20
DBL Steel Cloverleaf	AA	18'-1"	A2	22	22	23	24	16'-9"	A2	22	21	22	24	15'-8"	A2	23	21	22	23	14'-10"	A3	23	21	22	23
4x3 I Beam	Y	12'-3"	A1	19	21	22	23	11'-10"	A1	20	21	22	23	11'-4"	A1	20	21	22	23	11'-1"	A1	21	21	22	23
7x4 I Beam	Q	17'-3"	A1	21	27	28	29	16'-9"	A2	22	26	28	29	16'-1"	A2	23	26	28	29	15'-8"	A3	24	26	27	29

Header	Detail	trib 5'	Min Post Type	Uplift Footing (in)	8'	10'	12'	trib 5.5'	Min Post Type	Uplift Footing (in)	8'	10'	12'	trib 6'	Min Post Type	Uplift Footing (in)	8'	10'	12'	trib 6.5'	Min Post Type	Uplift Footing (in)	8'	10'	12'
On Slab	On Slab	n/a	A3					n/a	A3					n/a	A3					n/a	A3				
0.042"x3"x8"	N30	8'-11"	A1	20	23	25	26	8'-5"	A1	20	23	24	25	8'-0"	A1	21	23	24	25	7'-7"	A1	21	22	24	25
Double 3"x8"	N25	13'-5"	A3	23	26	27	29	12'-9"	A3	24	25	27	28	12'-2"	A3	24	25	27	28	11'-7"	A3	24	25	26	28
Double 2"x6.625"	N25	12'-0"	A2	22	24	25	26	11'-5"	A2	23	24	25	26	10'-11"	A3	23	23	25	26	10'-5"	A3	23	23	24	26
5.5" Extruded Fascia	L	11'-6"	A2	22	22	24	25	10'-10"	A2	22	22	23	25	10'-4"	A2	23	22	23	24	9'-11"	A2	23	22	23	24
California Fascia	N10, G	10'-0"	A1	21	21	22	23	9'-5"	A1	21	21	22	23	8'-11"	A1	22	20	21	22	8'-6"	A2	22	20	21	23
Classic Fascia	H	17'-4"	C	25	25	27	28	16'-6"	D	26	25	26	28	15'-10"	D	26	25	26	27	15'-3"	D	26	24	26	27
16 G Steel C	N9, T	14'-9"	A3	24	26	28	29	13'-10"	A3	24	26	27	29	13'-0"	B	24	26	27	28	12'-4"	C	25	25	27	28
14 G Steel C	N9, T	17'-10"	D	25	28	29	31	16'-10"	D	26	27	29	30	15'-10"	D	26	27	28	30	15'-0"	D	26	27	28	29
12 G Steel C	N9, T	26'-6"	E	29	31	32	34	25'-0"	F	29	30	32	33	23'-9"	F	30	30	32	33	22'-7"	F	30	29	31	33
Double 16 G Steel C	N9, N25, T	26'-9"	E	29	31	32	34	25'-6"	F	30	30	32	34	24'-5"	F	30	30	32	33	23'-5"	G	30	30	31	33
Double 14 G Steel C	N9, N25, T	30'-10"	G	31	32	34	35	29'-5"	G	31	31	33	35	28'-2"	G	31	31	33	34	27'-1"	G	32	31	33	34
Double 12 G Steel C	N9, N25, T	40'-0"	H1	33	34	36	38	38'-11"	H1	34	34	36	37	37'-3"	H1	35	33	35	37	35'-10"	H1	35	33	35	37
Steel Cloverleaf	W	8'-8"	A1	20	19	20	21	8'-2"	A1	20	19	21	22	7'-9"	A1	21	20	21	22	7'-5"	A1	21	20	21	23
DBL Steel Cloverleaf	AA	14'-1"	A3	24	20	21	23	13'-5"	A3	24	20	21	22	12'-10"	B	24	20	21	22	12'-4"	C	25	20	22	23
4x3 I Beam	Y	10'-9"	A1	22	20	22	23	10'-5"	A2	22	20	21	22	9'-11"	A2	22	20	21	22	9'-7"	A2	23	20	21	23
7x4 I Beam	Q	15'-3"	A3	24	26	27	29	14'-11"	C	25	26	27	28	14'-8"	C	25	25	27	28	14'-4"	D	26	25	27	28

Header	Detail	trib 7'	Min Post Type	Uplift Footing (in)	8'	10'	12'	trib 7.5'	Min Post Type	Uplift Footing (in)	8'	10'	12'	trib 8'	Min Post Type	Uplift Footing (in)	8'	10'	12'
On Slab	On Slab	n/a	A3					n/a	A3					n/a	A3				
0.042"x3"x8"	N30	7'-3"	A1	21	22	23	24	6'-11"	A1	21	22	23	24	6'-8"	A1	21	22	23	24
Double 3"x8"	N25	11'-2"	B	24	25	26	27	10'-8"	C	25	24	26	27	10'-4"	C	25	24	26	27
Double 2"x6.625"	N25	10'-0"	A3	24	23	24	25	9'-8"	A3	24	23	24	25	9'-4"	A3	24	22	24	25
5.5" Extruded Fascia	L	9'-6"	A3	23	21	23	24	9'-1"	A3	23	21	22	24	8'-9"	A3	24	21	23	24
California Fascia	N10, G	8'-2"	A2	22	21	22	23	7'-9"	A2	22	21	22	23	7'-6"	A2	22	21	23	24
Classic Fascia	H	14'-8"	E	27	24	26	27	14'-2"	E	27	24	25	27	13'-9"	E	27	24	25	26
16 G Steel C	N9, T	11'-8"	C	25	25	26	28	11'-1"	C	25	25	26	27	10'-7"	C	25	24	26	27
14 G Steel C	N9, T	14'-3"	D	26	26	28	29	13'-8"	D	27	26	27	29	13'-0"	E	27	26	27	28
12 G Steel C	N9, T	21'-7"	G	30	29	31	32	20'-8"	G	31	29	30	32	19'-11"	G	31	28	30	32
Double 16 G Steel C	N9, N25, T	22'-6"	G	31	29	31	33	21'-9"	G	31	29	31	32	21'-0"	G	31	29	31	32
Double 14 G Steel C	N9, N25, T	26'-1"	G	32	30	32	34	25'-2"	G	33	30	32	34	24'-4"	H1	33	30	32	33
Double 12 G Steel C	N9, N25, T	34'-6"	H1	35	33	35	36	33'-4"	H1	36	32	34	36	32'-4"	H1	36	32	34	36
Steel Cloverleaf	W	7'-0"	A1	21	21	22	23	6'-9"	A1	21	21	22	23	6'-5"	A1	21	21	23	24
DBL Steel Cloverleaf	AA	11'-11"	C	25	21	22	23	11'-6"	C	25	21	22	23	11'-2"	D	25	21	23	24
4x3 I Beam	Y	9'-3"	A3	23	21	22	23	8'-11"	A3	23	21	22	23	8'-8"	A3	23	21	23	24
7x4 I Beam	Q	14'-1"	D	26	25	27	28	13'-9"	E	27	25	27	28	13'-7"	E	27	25	26	28

Header	Detail	trib 9'	Min Post Type	Uplift Footing (in)	8'	10'	12'	trib 10'	Min Post Type	Uplift Footing (in)	8'	10'	12'	trib 11'	Min Post Type	Uplift Footing (in)	8'	10'	12'	trib 12'	Min Post Type	Uplift Footing (in)	8'	10'	12'
On Slab	On Slab	n/a	A3					n/a	A3					n/a	A3					n/a	A3				
0.042"x3"x8"	N30	6'-1"	A2	22	22	23	24	5'-8"	A2	22	23	24	25	5'-4"	A2	22	23	25	26	5'-0"	A2	22	24	25	26
Double 3"x8"	N25	9'-7"	C	25	24	25	26	9'-0"	D	26	23	25	26	8'-6"	D	26	23	25	26	8'-1"	D	26	24	25	26
Double 2"x6.625"	N25	8'-8"	C	24	22	23	24	8'-2"	C	25	23	24	25	7'-9"	C	25	23	25	26	7'-4"	D	25	24	25	26
5.5" Extruded Fascia	L	8'-2"	A3	24	22	23	24	7'-8"	B	24	23	24	25	7'-3"	C	25	23	25	26	6'-10"	C	25	24	25	26
California Fascia	N10, G	6'-11"	A2	23	22	23	24	6'-6"	A3	23	23	24	25	6'-1"	A3	23	23	25	26	5'-9"	A3	23	24	25	26
Classic Fascia	H	13'-0"	E	28	23	25	26	12'-4"	E	28	23	25	26	11'-9"	E	29	23	25	26	11'-3"	E	29	24	25	26
16 G Steel C	N9, T	9'-9"	C	25	24	25	26	8'-10"	C	25	23	25	26	8'-0"	D	25	23	25	26	7'-4"	D	25	24	25	26
14 G Steel C	N9, T	12'-0"	E	27	25	27	28	11'-2"	E	27	25	26	27	10'-5"	E	28	24	26	27	9'-9"	E	28	24	25	26
12 G Steel C	N9, T	18'-5"	G	31	28	30	31	17'-3"	G	32	27	29	30	16'-3"	G	32	27	29	30	15'-4"	G	32	27	28	30
Double 16 G Steel C	N9, N25, T	19'-9"	G	32	28	30	32	18'-8"	G	33	28	30	31	17'-9"	H1	33	28	29	31	16'-11"	H1	33	27	29	30
Double 14 G Steel C	N9, N25, T	22'-11"	H1	34	30	31	33	21'-9"	H1	34	29	31	32	20'-8"	H1	35	29	30	32	19'-9"	H1	35	28	30	32
Double 12 G Steel C	N9, N25, T	30'-6"	H2	37	32	34	35	28'-11"	H2	38	31	33	35	27'-7"	H2	38	31	33	34	26'-5"	H2	39	31	32	34
Steel Cloverleaf	W	6'-0"	A1	22	22	23	24	5'-7"	A2	22	23	24	25	5'-3"	A2	22	23	25	26	4'-11"	A2	22	24	25	26
DBL Steel Cloverleaf	AA	10'-6"	D	26	22	23	24	10'-0"	D	26	23	24	25	9'-6"	E	27	23	25	26	9'-1"	E	27	24	25	26
4x3 I Beam	Y	8'-2"	A3	24	22	23	24	7'-9"	B	24	23	24	25	7'-3"	C	25	23	25	26	6'-10"	C	25	24	25	26
7x4 I Beam	Q	13'-2"	E	28	25	26	28	12'-5"	E	28	24	26	27	11'-6"	E	29	24	25	27	10'-10"	E	29	24	25	26

Header	Detail	trib 13'	Min Post Type	Uplift Footing (in)	8'	10'	12'	trib 14'	Min Post Type	Uplift Footing (in)	8'	10'	12'	trib 15'	Min Post Type	Uplift Footing (in)	8'	10'	12'	trib 16'	Min Post Type	Uplift Footing (in)	8'	10'	12'
On Slab	On Slab	n/a	A3					n/a	A3					n/a	A3					n/a	A3				
0.042"x3"x8"	N30	4'-8"	A2	22	24	26	27	4'-5"	A2	23	25	26	27	4'-2"	A2	23	25	27	28	3'-11"	A2	23	26	27	28
Double 3"x8"	N25	7'-7"	D	26	24	26	27	7'-3"	D	27	25	26	27	6'-11"	E	27	25	27	28	6'-8"	E	27	26	27	28
Double 2"x6.625"	N25	7'-0"	D	26	24	26	27	6'-8"	D	26	25	26	27	6'-5"	D	26	25	27	28	6'-2"	D	26	26	27	28
5.5" Extruded Fascia	L	6'-6"	C	25	24	26	27	6'-2"	C	25	25	26	27	5'-11"	D	25	25	27	28	5'-8"	D	26	26	27	28
California Fascia	N10, G	5'-4"	A3	24	24	26	27	5'-1"	A3	24	25	26	27	4'-10"	A3	24	25	27	28	4'-8"	A3	24	26	27	28
Classic Fascia	H	10'-9"	F	30	24	26	27	10'-4"	F	30	25	26	27	10'-0"	F	30	25	27	28	9'-8"	G	31	26	27	28
16 G Steel C	N9, T	6'-9"	C	25	24	26	27	6'-3"	C	25	25	26	27	5'-10"	C	25	25	27	28	5'-6"	C	25	26	27	28
14 G Steel C	N9, T	9'-1"	E	28	24	26	27	8'-6"	E	28	25	26	27	7'-11"	E	28	25	27	28	7'-5"	E	28	26	27	28
12 G Steel C	N9, T	14'-5"	G	33	26	28	29	13'-9"	H1	33	26	27	29	13'-2"	H1	33	26	27	29	12'-7"	H1	33	26	27	29
Double 16 G Steel C	N9, N25, T	16'-1"	H1	34	27	29	30	15'-5"	H1	34	27	28	30	14'-10"	H1	35	27	28	29	14'-4"	H1	35	27	28	30
Double 14 G Steel C	N9, N25, T	18'-11"	H1	36	28	30	31	18'-2"	H1	36	28	29	31	17'-6"	H1	37	28	29	31	16'-11"	H2	37	28	30	31
Double 12 G Steel C	N9, N25, T	25'-3"	H3	39	30	32	34	24'-4"	H3	40	30	32	33	23'-6"	H3	40	30	32	33	22'-10"	H3	41	30	32	33
Steel Cloverleaf	W	4'-7"	A2	22	24	26	27	4'-5"	A2	23	25	26	27	4'-2"	A2	23	25	27	28	4'-0"	A2	23	26	27	28
DBL Steel Cloverleaf	AA	8'-8"	E	28	24	26	27	8'-4"	E	28	25	26	27	8'-1"	E	28	25	27	28	7'-10"	E	29	26	27	28
4x3 I Beam	Y	6'-4"	C	25	24	26	27	6'-0"	C	25	25	26	27	5'-8"	C	25	25	27	28	5'-5"	C	25	26	27	28
7x4 I Beam	Q	10'-1"	E	29	24	26	27	9'-6"	E	29	25	26	27	9'-0"	E	29	25	27	28	8'-7"	F	29	26	27	28

Header	Detail	trib 17'	Min Post Type	Uplift Footing (in)	8'	10'	12'	trib 18'	Min Post Type	Uplift Footing (in)	8'	10'	12'
On Slab	On Slab	n/a	A3					n/a	A3				
0.042"x3"x8"	N30	3'-9"	A3	23	26	27	29	3'-7"	A3	23	26	28	29
Double 3"x8"	N25	6'-4"	E	27	26	27	29	6'-1"	E	27	26	28	29
Double 2"x6.625"	N25	5'-11"	D	27	26	27	29	5'-8"	E	27	26	28	29
5.5" Extruded Fascia	L	5'-5"	D	26	26	27	29	5'-3"	D	26	26	28	29
California Fascia	N10, G	4'-5"	A3	24	26	27	29	4'-3"	B	24	26	28	29
Classic Fascia	H	9'-5"	G	31	26	27	29	9'-1"	G	31	26	28	29
16 G Steel C	N9, T	5'-2"	C	25	26	27	29	4'-11"	C	25	26	28	29
14 G Steel C	N9, T	7'-0"	E	28	26	27	29	6'-7"	E	28	26	28	29
12 G Steel C	N9, T	12'-1"	H1	34	26	28	29	11'-7"	H1	34	26	28	29
Double 16 G Steel C	N9, N25, T	13'-10"	H1	35	27	28	30	13'-5"	H1	36	27	29	30
Double 14 G Steel C	N9, N25, T	16'-5"	H2	37	28	30	31	15'-11"	H2	38	28	30	31
Double 12 G Steel C	N9, N25, T	22'-1"	H3	41	30	32	34	21'-6"	H4	42	31	32	34
Steel Cloverleaf	W	3'-10"	A3	23	26	27	29	3'-8"	A3	23	26	28	29
DBL Steel Cloverleaf	AA	7'-7"	E	29	26	27	29	7'-4"	E	29	26	28	29
4x3 I Beam	Y	5'-1"	C	25	26	27	29	4'-11"	C	25	26	28	29
7x4 I Beam	Q	8'-2"	F	30	26	27	29	7'-9"	F	30	26	28	29

Amerimax Exterior Home Products
28921 US Hwy 74
Romoland, CA 92585

Carl Putnam, P. E.
3441 Ivylink Place
Lynchburg, VA 24503
carlputnam@comcast.net

Registered Professional Engineer (Civil)
CERTIFICATE NO. 39702
CARL PUTNAM
Date Signed
ARIZONA U.S.A.
Expires 09/30/2024

JAN 20 2023

SECTION 5.0 POST SPACING, POST TYPE AND FOOTING SIZE FOR SOLID COVERS

Roof Solidity: 100%

Ground Snow Load: 10 psf Live Load: 10 psf Wind Speed: 100 MPH EXPOSURE B Seismic Ss= 150% Seismic Design Category D Structures are Attached to Existing Building

Table 5.2a (cubic footing "d"; Constrained Footing (in) by Max Post Length)

Header	Detail	trib 3'	Min Post Type	Uplift Footing (in)	8'	10'	12'	trib 3.5'	Min Post Type	Uplift Footing (in)	8'	10'	12'	trib 4'	Min Post Type	Uplift Footing (in)	8'	10'	12'	trib 4.5'	Min Post Type	Uplift Footing (in)	8'	10'	12'	trib 5'	Min Post Type	Uplift Footing (in)	8'	10'	12'
On Slab	On Slab	22'-8"	A3					19'-5"	A3					17'-0"	A3					15'-1"	A3					13'-7"	A3				
0.042"x3"x8"	N30	12'-4"	A1	20	17	18	19	11'-3"	A1	20	17	18	19	10'-5"	A1	21	17	19	19	9'-8"	A1	21	18	19	20	9'-1"	A1	21	19	20	21
Double 3"x8"	N25	18'-0"	A1	23	18	20	21	16'-7"	A2	23	19	20	21	15'-5"	A2	24	19	20	21	14'-5"	A2	24	19	21	21	13'-8"	A3	24	20	21	22
Double 2"x6.625"	N25	16'-0"	A1	22	18	19	20	14'-9"	A1	22	18	19	20	13'-9"	A1	23	19	20	21	12'-11"	A2	23	19	20	21	12'-2"	A2	24	19	20	21
5.5" Extruded Fascia	L	15'-6"	A1	21	18	19	20	14'-3"	A1	22	18	19	20	13'-2"	A1	22	18	19	20	12'-4"	A1	23	19	20	21	11'-8"	A2	23	19	20	21
California Fascia	N10, G	13'-8"	A1	21	17	18	19	12'-6"	A1	21	18	19	19	11'-7"	A1	21	18	19	20	10'-9"	A1	22	18	19	20	10'-2"	A1	22	19	20	21
Classic Fascia	H	22'-8"	A3	24	20	21	22	21'-0"	A3	25	20	21	22	19'-7"	A3	26	20	22	23	18'-6"	C	26	21	22	23	17'-6"	C	27	21	22	23
16 G Steel C	N9, T	21'-2"	A2	24	19	20	21	19'-1"	A3	24	20	21	22	17'-6"	A3	25	20	21	22	16'-1"	A3	25	20	21	22	15'-0"	A3	25	20	21	22
14 G Steel C	N9, T	25'-3"	A3	25	20	21	22	22'-11"	B	26	20	22	23	21'-0"	C	26	21	22	23	19'-6"	C	27	21	22	23	18'-2"	C	27	21	22	23
12 G Steel C	N9, T	36'-5"	E	29	22	23	25	33'-3"	E	29	22	24	25	30'-9"	E	30	23	24	25	28'-8"	E	30	23	24	26	26'-10"	E	31	23	25	26
Double 16 G Steel C	N9, N25, T	35'-4"	E	28	22	23	24	32'-8"	E	29	22	24	25	30'-5"	E	30	23	24	25	28'-8"	E	30	23	24	26	27'-1"	E	31	23	25	26
Double 14 G Steel C	N9, N25, T	40'-0"	E	29	23	24	25	37'-6"	E	30	23	25	26	35'-0"	E	31	24	25	26	33'-0"	F	32	24	25	27	31'-3"	G	32	24	26	27
Double 12 G Steel C	N9, N25, T	40'-0"	E	29	23	24	25	40'-0"	E	31	24	25	26	40'-0"	G	32	24	26	27	40'-0"	G	34	25	27	28	40'-0"	H1	35	26	27	29
Steel Cloverleaf	W	12'-1"	A1	20	17	18	19	11'-0"	A1	20	17	18	19	10'-2"	A1	21	17	19	19	9'-5"	A1	21	18	19	20	8'-10"	A1	21	19	20	21
DBL Steel Cloverleaf	AA	18'-5"	A1	23	19	20	21	17'-1"	A2	23	19	20	21	15'-11"	A2	24	19	20	21	15'-0"	A3	24	20	21	22	14'-3"	A3	25	20	21	22
4x3 I Beam	Y	11'-10"	A1	20	17	18	18	11'-4"	A1	20	17	18	19	11'-0"	A1	21	18	19	19	10'-9"	A1	22	18	19	20	10'-5"	A1	22	19	20	21
7x4 I Beam	Q	16'-9"	A1	22	18	19	20	16'-1"	A2	23	19	20	21	15'-6"	A2	24	19	20	21	15'-3"	A3	24	20	21	22	14'-9"	A3	25	20	21	22

Header	Detail	trib 5.5'	Min Post Type	Uplift Footing (in)	8'	10'	12'	trib 6'	Min Post Type	Uplift Footing (in)	8'	10'	12'	trib 6.5'	Min Post Type	Uplift Footing (in)	8'	10'	12'	trib 7'	Min Post Type	Uplift Footing (in)	8'	10'	12'	trib 7.5'	Min Post Type	Uplift Footing (in)	8'	10'	12'	trib 8'	Min Post Type	Uplift Footing (in)	8'	10'	12'
On Slab	On Slab	12'-4"	A3					11'-4"	A3					10'-5"	A1					9'-8"	A3					9'-1"	A3					8'-6"	A3				
0.042"x3"x8"	N30	8'-7"	A1	22	19	20	21	8'-1"	A1	22	19	21	22	7'-8"	A1	22	20	21	22	7'-5"	A1	22	20	21	22	7'-1"	A1	22	21	22	23	6'-9"	A1	23	21	22	23
Double 3"x8"	N25	12'-11"	A3	25	20	21	22	12'-4"	A3	25	20	21	22	11'-9"	A3	25	20	21	22	11'-4"	B	26	20	22	23	10'-11"	C	26	21	22	23	10'-6"	C	26	21	22	23
Double 2"x6.625"	N25	11'-7"	A2	24	19	20	21	11'-0"	A2	24	19	21	22	10'-7"	A3	24	20	21	22	10'-3"	A3	25	20	21	22	9'-10"	A3	25	21	22	23	9'-6"	A3	25	21	22	23
5.5" Extruded Fascia	L	11'-0"	A2	23	19	20	21	10'-6"	A2	24	19	21	22	10'-0"	A2	24	20	21	22	9'-8"	A3	24	20	21	22	9'-3"	A3	25	21	22	23	8'-11"	A3	25	21	22	23
California Fascia	N10, G	9'-7"	A1	22	19	20	21	9'-1"	A1	23	19	21	22	8'-7"	A2	23	20	21	22	8'-4"	A2	23	20	21	22	7'-11"	A2	23	21	22	23	7'-8"	A2	24	21	22	23
Classic Fascia	H	16'-9"	D	27	21	22	23	16'-0"	D	27	21	23	24	15'-4"	D	28	22	23	24	14'-11"	D	28	22	23	24	14'-5"	E	28	22	23	24	14'-0"	E	29	22	24	25
16 G Steel C	N9, T	14'-0"	A3	25	20	21	22	13'-2"	B	26	20	22	23	12'-6"	C	26	21	22	23	12'-0"	C	26	21	22	23	11'-5"	C	26	21	22	23	10'-10"	C	26	21	22	23
14 G Steel C	N9, T	17'-1"	D	27	21	23	24	16'-1"	D	27	21	23	24	15'-3"	D	28	22	23	24	14'-8"	D	28	22	23	24	13'-11"	D	28	22	23	24	13'-4"	E	28	22	23	24
12 G Steel C	N9, T	25'-4"	E	31	24	25	26	24'-0"	F	31	24	25	26	22'-10"	F	32	24	25	27	22'-1"	F	32	24	26	27	21'-2"	G	32	24	26	27	20'-3"	G	33	24	26	27
Double 16 G Steel C	N9, N25, T	25'-10"	F	31	24	25	26	24'-8"	F	32	24	25	27	23'-8"	F	32	24	26	27	22'-11"	G	32	24	26	27	22'-1"	G	33	25	26	27	21'-4"	G	33	25	26	27
Double 14 G Steel C	N9, N25, T	29'-9"	G	33	25	26	27	28'-6"	G	33	25	26	27	27'-4"	G	34	25	27	28	26'-7"	G	34	25	27	28	25'-7"	G	34	26	27	28	24'-9"	H1	35	26	27	29
Double 12 G Steel C	N9, N25, T	39'-4"	H1	36	26	28	29	37'-8"	H1	36	27	28	30	36'-2"	H1	37	27	28	30	35'-2"	H1	37	27	29	30	33'-11"	H1	38	27	29	30	32'-10"	H1	38	28	29	31
Steel Cloverleaf	W	8'-4"	A1	21	19	20	21	7'-10"	A1	22	19	21	22	7'-6"	A1	22	20	21	22	7'-2"	A1	22	20	21	22	6'-11"	A1	22	21	22	23	6'-7"	A1	22	21	22	23
DBL Steel Cloverleaf	AA	13'-7"	A3	25	20	21	22	13'-0"	A3	26	20	21	23	12'-6"	C	26	21	22	23	12'-2"	C	26	21	22	23	11'-8"	C	27	21	22	23	11'-4"	C	27	21	22	23
4x3 I Beam	Y	10'-2"	A2	23	19	20	21	9'-11"	A2	23	19	21	22	9'-8"	A2	24	20	21	22	9'-5"	A2	24	20	21	22	9'-1"	A3	24	21	22	23	8'-9"	A3	25	21	22	23
7x4 I Beam	Q	14'-5"	B	26	20	22	23	14'-1"	C	26	21	22	23	13'-9"	C	27	21	22	23	13'-7"	D	27	21	23	24	13'-4"	D	28	22	23	24	13'-2"	D	28	22	23	24

Header	Detail	trib 9'	Min Post Type	Uplift Footing (in)	8'	10'	12'	trib 10'	Min Post Type	Uplift Footing (in)	8'	10'	12'	trib 11'	Min Post Type	Uplift Footing (in)	8'	10'	12'	trib 12'	Min Post Type	Uplift Footing (in)	8'	10'	12'	trib 13'	Min Post Type	Uplift Footing (in)	8'	10'	12'
On Slab	On Slab	7'-6"	A3					6'-9"	A3					6'-2"	A3					5'-8"	A3					5'-2"	A3				
0.042"x3"x8"	N30	6'-3"	A2	23	22	23	24	5'-9"	A2	23	22	23	25	5'-5"	A2	23	23	24	25	5'-1"	A2	24	23	25	26	4'-9"	A2	24	24	25	26
Double 3"x8"	N25	9'-9"	C	27	22	23	24	9'-2"	D	27	22	23	25	8'-7"	D	27	23	24	25	8'-2"	D	28	23	25	26	7'-9"	D	28	24	25	26
Double 2"x6.625"	N25	8'-10"	B	26	22	23	24	8'-4"	C	26	22	23	25	7'-10"	C	26	23	24	25	7'-5"	C	27	23	25	26	7'-1"	D	27	24	25	26
5.5" Extruded Fascia	L	8'-4"	A3	25	22	23	24	7'-9"	A3	26	22	23	25	7'-4"	C	26	23	24	25	6'-11"	C	26	23	25	26	6'-7"	C	26	24	25	26
California Fascia	N10, G	7'-1"	A2	24	22	23	24	6'-7"	A2	24	22	23	25	6'-2"	A3	24	23	24	25	5'-10"	A3	25	23	25	26	5'-6"	A3	25	24	25	26
Classic Fascia	H	13'-2"	E	29	23	24	25	12'-6"	E	30	23	24	25	11'-10"	E	30	23	25	26	11'-4"	E	31	23	25	26	10'-11"	F	31	24	25	26
16 G Steel C	N9, T	9'-11"	C	27	22	23	24	9'-1"	C	27	22	23	25	8'-3"	C	27	23	24	25	7'-6"	C	27	23	25	26	6'-11"	C	27	24	25	26
14 G Steel C	N9, T	12'-3"	E	29	22	23	25	11'-4"	E	29	22	24	25	10'-7"	E	29	23	24	25	9'-11"	E	29	23	25	26	9'-4"	E	30	24	25	26
12 G Steel C	N9, T	18'-9"	G	33	25	26	27	17'-6"	G	33	25	26	28	16'-6"	G	34	25	27	28	15'-7"	G	34	25	27	28	14'-9"	G	34	26	27	28
Double 16 G Steel C	N9, N25, T	20'-0"	G	34	25	27	28	18'-11"	G	34	25	27	28	17'-11"	H1	35	26	27	29	17'-1"	H1	35	26	28	29	16'-4"	H1	36	26	28	29
Double 14 G Steel C	N9, N25, T	23'-3"	H1	35	26	28	29	22'-0"	H1	36	26	28	29	20'-11"	H1	37	27	28	30	20'-0"	H1	37	27	29	30	19'-2"	H1	38	27	29	30
Double 12 G Steel C	N9, N25, T	30'-11"	H2	39	28	30	31	29'-4"	H2	40	28	30	32	27'-11"	H2	40	29	30	32	26'-8"	H2	41	29	31	32	25'-8"	H3	41	29	31	33
Steel Cloverleaf	W	6'-1"	A1	23	22	23	24	5'-8"	A2	23	22	23	25	5'-4"	A2	23	23	24	25	5'-0"	A2	23	23	25	26	4'-8"	A2	24	24	25	26
DBL Steel Cloverleaf	AA	10'-8"	D	27	22	23	24	10'-1"	D	28	22	23	25	9'-7"	E	28	23	24	25	9'-2"	E	29	23	25	26	8'-10"	E	29	24	25	26
4x3 I Beam	Y	8'-3"	A3	25	22	23	24	7'-10"	A3	26	22	23	25	7'-5"	C	26	23	24	25	6'-11"	C	26	23	25	26	6'-6"	C	26	24	25	26
7x4 I Beam	Q	12'-9"	E	29	22	24	25	12'-5"	E	30	23	24	25	11'-9"	E	30	23	24	26	11'-0"	E	30	23	25	26	10'-4"	E	31	24	25	26

Header	Detail	trib 14'	Min Post Type	Uplift Footing (in)	8'	10'	12'	trib 15'	Min Post Type	Uplift Footing (in)	8'	10'	12'	trib 16'	Min Post Type	Uplift Footing (in)	8'	10'	12'	trib 17'	Min Post Type	Uplift Footing (in)	8'	10'	12'	trib 18'	Min Post Type	Uplift Footing (in)	8'	10'	12'
On Slab	On Slab	4'-10"	A3					4'-6"	A3					4'-3"	A3					4'-0"	A3					3'-9"	A3				
0.042"x3"x8"	N30	4'-6"	A2	24	24	26	27	4'-3"	A2	24	25	26	27	4'-1"	A2	24	25	26	28	3'-10"	A2	24	25	27	28	3'-8"	A3	24	26	27	29
Double 3"x8"	N25	7'-5"	D	28	24	26	27	7'-1"	E	28	25	26	27	6'-9"	E	29	25	26	28	6'-6"	E	29	25	27	28	6'-3"	E	29	26	27	29
Double 2"x6.625"	N25	6'-10"	D	27	24	26	27	6'-6"	D	28	25	26	27	6'-3"	D	28	25	26	28	6'-0"	D	28	25	27	28	5'-10"	D	28	26	27	29
5.5" Extruded Fascia	L	6'-4"	C	27	24	26	27	6'-0"	C	27	25	26	27	5'-9"	D	27	25	26	28	5'-7"	D	27	25	27	28	5'-4"	D	27	26	27	29
California Fascia	N10, G	5'-3"	A3	25	24	26	27	5'-0"	A3	25	25	26	27	4'-9"	A3	25	25	26	28	4'-6"	A3	26	25	27	28	4'-4"	A3	26	26	27	29
Classic Fascia	H	10'-7"	F	32	24	26	27	10'-2"	F	32	25	26	27	9'-10"	G	32	25	26	28	9'-7"	G	33	25	27	28	9'-3"	G	33	26	27	29
16 G Steel C	N9, T	6'-6"	D	27	24	26	27	6'-1"	C	27	25	26	27	5'-8"	C	27	25	26	28	5'-4"	C	27	25	27	28	5'-0"	C	27	26	27	29
14 G Steel C	N9, T	8'-9"	E	30	24	26	27	8'-2"	E	30	25	26	27	7'-8"	E	30	25	26	28	7'-2"	E	30	25	27	28	6'-10"	E	30	26	27	29
12 G Steel C	N9, T	14'-1"	H1	35	26	27	29	13'-5"	H1	35	26	27	29	12'-10"	H1	35	26	28	29	12'-4"	H1	36	26	28	29	11'-10"	H1	36	26	28	29
Double 16 G Steel C	N9, N25, T	15'-9"	H1	36	26	28	29	15'-2"	H1	36	27	28	30	14'-7"	H1	37	27	28	30	14'-1"	H1	37	27	29	30	13'-8"	H1	37	27	29	30
Double 14 G Steel C	N9, N25, T	18'-6"	H1	38	28	29	31	17'-10"	H1	39	28	29	31	17'-3"	H2	39	28	30	31	16'-8"	H2	39	28	30	31	16'-2"	H2	40	28	30	31
Double 12 G Steel C	N9, N25, T	24'-10"	H3	42	30	31	33	23'-11"	H3	42	30	32	33	23'-2"	H3	43	30	32	33	22'-5"	H3	43	30	32	34	21'-10"	H3	44	31	32	34
Steel Cloverleaf	W	4'-6"	A2	24	24	26	27	4'-3"	A2	24	25	26	27	4'-1"	A2	24	25	26	28	3'-11"	A3	24	25	27	28	3'-9"	A3	24	26	27	29
DBL Steel Cloverleaf	AA	8'-6"	E	29	24	26	27	8'-3"	E	30	25	26	27	7'-11"	E	30	25	26	28	7'-8"	E	30	25	27	28	7'-6"	E	31	26	27	29
4x3 I Beam	Y	6'-2"	C	26	24	26	27	5'-10"	C	27	25	26	27	5'-6"	C	27	25	26	28	5'-3"	C	27	25	27	28	5'-0"	C	27	26	27	29
7x4 I Beam	Q	9'-9"	E	31	24	26	27	9'-3"	E	31	25	26	27	8'-9"	E	31	25	26	28	8'-4"	F	31	25	27	28	7'-11"	F	31	26	27	29

Ground Snow Load: 10 psf Live Load: 10 psf Wind Speed: 100 MPH EXPOSURE B Seismic Ss= 150% Seismic Design Category D Freestanding Structures

Table 5.2b (cubic footing "d"; Constrained Footing (in) by Max Post Length)

Header	Detail	trib 3'	Min Post Type	Uplift Footing (in)	8'	10'	12'	trib 3.5'	Min Post Type	Uplift Footing (in)	8'	10'	12'	trib 4'	Min Post Type	Uplift Footing (in)	8'	10'	12'	trib 4.5'	Min Post Type	Uplift Footing (in)	8'	10'	12'	trib 5'	Min Post Type	Uplift Footing (in)	8'	10'	12'
On Slab	On Slab	n/a	A3					n/a	A3					n/a	A3					n/a	A3					n/a	A3				
0.042"x3"x8"	N30	12'-4"	A1	19	23	25	26	11'-3"	A1	19	23	24	25	10'-5"	A1	19	22	24	25	9'-8"	A1	20	22	23	24	9'-1"	A1	20	22	23	24
Double 3"x8"	N25	18'-0"	A1	21	26	27	29	16'-7"	A2	22	25	27	28	15'-5"	A2	22	25	26	27	14'-5"	A2	22	24	26	27	13'-8"	A3	23	24	25	27
Double 2"x6.625"	N25	16'-0"	A1	20	24	25	26	14'-9"	A1	21	23	25	26	13'-9"	A1	21	23	24	25	12'-11"	A2	22	23	24	25	12'-2"	A2	22	22	24	25
5.5" Extruded Fascia	L	15'-6"	A1	20	23	24	25	14'-3"	A1	21	22	23	24	13'-2"	A1	21	22	23	24	12'-4"	A1	21	21	22	24	11'-8"	A2	22	21	22	23
California Fascia	N10, G	13'-8"	A1	19	21	22	23	12'-6"	A1	20	20	22	23	11'-7"	A1	20	20	21	22	10'-9"	A1	20	20	21	22	10'-2"	A1	21	19	20	21
Classic Fascia	H	22'-8"	A3	23	25	27	28	21'-0"	A3	23	25	26	27	19'-7"	A3	24	24	26	27	18'-6"	C	24	24	25	26	17'-6"	C	25	24	25	26
16 G Steel C	N9, T	21'-2"	A2	22	27	28	30	19'-1"	A3	23	26	28	29	17'-6"	A3	23	26	27	28	16'-1"	A3	23	25	26	28	15'-0"	A3	24	25	26	27
14 G Steel C	N9, T	25'-3"	A3	24	28	30	31	22'-11"	B	24	27	29	30	21'-0"	C	24	27	28	30	19'-6"	C	25	26	28	29	18'-2"	C	25	26	27	29
12 G Steel C	N9, T	36'-5"	E	27	31	33	34	33'-3"	E	27	30	32	33	30'-9"	E	28	29	31	33	28'-8"	E	28	29	31	32	26'-10"	E	29	28	30	32
Double 16 G Steel C	N9, N25, T	35'-4"	E	26	31	32	34	32'-8"	E	27	30	32	33	30'-5"	E	28	29	31	33	28'-8"	E	28	29	31	32	27'-1"	E	29	29	30	32
Double 14 G Steel C	N9, N25, T	40'-0"	E	27	32	33	35	37'-6"	E	28	31	33	34	35'-0"	E	29	30	32	34	33'-0"	F	30	30	32	33	31'-3"	G	30	30	31	33
Double 12 G Steel C	N9, N25, T	40'-0"	E	27	32	33	35	40'-0"	E	29	32	33	35	40'-0"	G	30	32	33	35	40'-0"	G	31	32	33	35	40'-0"	H1	33	32	33	35
Steel Cloverleaf	W	12'-1"	A1	18	18	19	20	11'-0"	A1	19	18	19	20	10'-2"	A1	19	17	18	19	9'-5"	A1	19	17	18	19	8'-10"	A1	20	18	19	20
DBL Steel Cloverleaf	AA	18'-5"	A1	21	20	21	22	17'-1"	A2	22	20	21	22	15'-11"	A2	22	19	21	22	15'-0"	A3	23	20	21	22	14'-3"	A3	23	20	21	22
4x3 I Beam	Y	12'-5"	A1	19	20	21	22	12'-0"	A1	19	19	21	22	11'-6"	A1	20	19	20	21	11'-3"	A1	21	19	20	21	11'-0"	A1	21	19	20	21
7x4 I Beam	Q	17'-7"	A1	21	25	26	27	17'-0"	A2	22	25	26	27	16'-4"	A2	22	24	26	27	15'-11"	A3	23	24	26	27	15'-6"	A3	24	24	25	27

Header	Detail	trib 5.5'	Min Post Type	Uplift Footing (in)	8'	10'	12'	trib 6'	Min Post Type	Uplift Footing (in)	8'	10'	12'	trib 6.5'	Min Post Type	Uplift Footing (in)	8'	10'	12'	trib 7'	Min Post Type	Uplift Footing (in)	8'	10'	12'	trib 7.5'	Min Post Type	Uplift Footing (in)	8'	10'	12'	trib 8'	Min Post Type	Uplift Footing (in)	8'	10'	12'
On Slab	On Slab	n/a	A3					n/a	A3					n/a	A3					n/a	A3					n/a	A3					n/a	A3				
0.042"x3"x8"	N30	8'-7"	A1	20	21	23	24	8'-1"	A1	20	21	22	23	7'-8"	A1	21	21	22	23	7'-5"	A1	21	21	22	23	7'-1"	A1	21	20	21	23	6'-9"	A1	21	20	21	22
Double 3"x8"	N25	12'-11"	A3	23	24	25	26	12'-4"	A3	23	23	25	26	11'-9"	A3	24	23	24	26	11'-4"	B	24	23	24	25	10'-11"	C	24	23	24	25	10'-6"	C	24	22	24	25
Double 2"x6.625"	N25	11'-7"	A2	22	22	23	24	11'-0"	A2	23	22	23	24	10'-7"	A3	23	21	23	24	10'-3"	A3	23	21	22	24	9'-10"	A3	23	21	22	23	9'-6"	A3	24	21	22	23
5.5" Extruded Fascia	L	11'-0"	A2	22	21	22	23	10'-6"	A2	22	20	22	23	10'-0"	A2	22	20	21	22	9'-8"	A3	23	20	21	22	9'-3"	A3	23	20	21	22	8'-11"	A3	23	20	21	22
California Fascia	N10, G	9'-7"	A1	21	19	20	21	9'-1"	A1	21	19	20	21	8'-7"	A2	21	19	20	21	8'-4"	A2	22	19	20	21	7'-11"	A2	22	20	21	22	7'-8"	A2	22	20	21	22
Classic Fascia	H	16'-9"	D	25	23	25	26	16'-0"	D	26	23	24	25	15'-4"	D	26	23	24	25	14'-11"	D	26	23	24	25	14'-5"	E	27	22	24	25	14'-0"	E	27	22	24	25
16 G Steel C	N9, T	14'-0"	A3	24	24	26	27	13'-2"	B	24	24	25	26	12'-6"	C	24	23	25	26	12'-0"	C	24	23	25	26	11'-5"	C	25	23	24	25	10'-10"	C	25	23	24	25
14 G Steel C	N9, T	17'-1"	D	25	25	27	28	16'-1"	D	26	25	26	28	15'-3"	D	26	25	26	27	14'-8"	D	26	24	26	27	13'-11"	D	26	24	26	27	13'-4"	E	26	24	25	26
12 G Steel C	N9, T	25'-4"	E	29	28	30	31	24'-0"	F	29	28	29	31	22'-10"	F	30	27	29	30	22'-1"	F	30	27	29	30	21'-2"	G	30	27	28	30	20'-3"	G	30	27	28	29
Double 16 G Steel C	N9, N25, T	25'-10"	F	29	28	30	31	24'-8"	F	29	28	30	31	23'-8"	F	30	28	29	31	22'-11"	G	30	27	29	30	22'-1"	G	31	27	29	30	21'-4"	G	31	27	28	30
Double 14 G Steel C	N9, N25, T	29'-9"	G	30	29	31	32	28'-6"	G	31	29	31	32	27'-4"	G	31	29	30	32	26'-7"	G	32	28	30	31	25'-7"	G	32	28	30	31	24'-9"	H1	32	28	30	31
Double 12 G Steel C	N9, N25, T	39'-4"	H1	33	31	33	35	37'-8"	H1	34	31	33	34	36'-2"	H1	34	31	33	34	35'-2"	H1	35	31	32	34	33'-11"	H1	35	30	32	34	32'-10"	H1	36	30	32	33
Steel Cloverleaf	W	8'-4"	A1	20	18	19	20	7'-10"	A1	20	18	20	20	7'-6"	A1	20	19	20	21	7'-2"	A1	21	19	20	21	6'-11"	A1	21	20	21	22	6'-7"	A1	21	20	21	22
DBL Steel Cloverleaf	AA	13'-7"	A3	23	20	21	22	13'-0"	A3	24	20	21	23	12'-6"	C	24	21	22	23	12'-2"	C	25	21	22	23	11'-8"	C	25	21	22	23	11'-4"	C	25	21	22	23
4x3 I Beam	Y	10'-6"	A2	22	19	20	21	10'-1"	A2	22	19	20	21	9'-8"	A2	22	19	20	21	9'-5"	A2	23	19	21	22	9'-1"	A3	23	20	21	22	8'-9"	A3	23	20	21	22
7x4 I Beam	Q	15'-3"	C	24	24	25	26	14'-9"	C	25	24	25	26	14'-6"	D	25	24	25	26	14'-4"	D	26	23	25	26	14'-1"	D	26	23	25	26	13'-9"	E	27	23	25	26

Header	Detail	trib 9'	Min Post Type	Uplift Footing (in)	8'	10'	12'	trib 10'	Min Post Type	Uplift Footing (in)	8'	10'	12'	trib 11'	Min Post Type	Uplift Footing (in)	8'	10'	12'	trib 12'	Min Post Type	Uplift Footing (in)	8'	10'	12'	trib 13'	Min Post Type	Uplift Footing (in)	8'	10'	12'
On Slab	On Slab	n/a	A3					n/a	A3					n/a	A3					n/a	A3					n/a	A3				
0.042"x3"x8"	N30	6'-3"	A2	21	20	22	23	5'-9"	A2	22	21	22	23	5'-5"	A2	22	22	23	24	5'-1"	A2	22	22	23	24	4'-9"	A2	22	22	24	25
Double 3"x8"	N25	9'-9"	C	25	22	23	24	9'-2"	D	25	22	23	24	8'-7"	D	25	22	23	24	8'-2"	D	26	22	23	24	7'-9"	D	26	22	24	25
Double 2"x6.625"	N25	8'-10"	B	24	20	22	23	8'-4"	C	24	21	22	23	7'-10"	C	25	22	23	24	7'-5"	C	25	22	23	24	7'-1"	D	25	22	24	25
5.5" Extruded Fascia	L	8'-4"	A3	23	20	22	23	7'-9"	A3	24	21	22	23	7'-4"	C	24	22	23	24	6'-11"	C	24	22	23	24	6'-7"	C	25	22	24	25
California Fascia	N10, G	7'-1"	A2	22	20	22	23	6'-7"	A2	23	21	22	23	6'-2"	A3	23	22	23	24	5'-10"	A3	23	22	23	24	5'-6"	A3	23	22	24	25
Classic Fascia	H	13'-2"	E	27	23	24	25	12'-6"	E	28	23	24	25	11'-10"	E	28	23	25	26	11'-4"	E	29	23	25	26	10'-11"	F	29	24	25	26
16 G Steel C	N9, T	9'-11"	C	25	22	23	25	9'-1"	C	25	22	23	24	8'-3"	C	25	22	23	24	7'-6"	C	25	22	23	24	6'-11"	C	25	22	24	25
14 G Steel C	N9, T	12'-3"	E	27	23	25	26	11'-4"	E	27	23	24	25	10'-7"	E	27	22	24	25	9'-11"	E	27	23	24	25	9'-4"	E	28	23	24	25
12 G Steel C	N9, T	18'-9"	G	31	26	28	29	17'-6"	G	31	26	27	28	16'-6"	G	32	25	27	28	15'-7"	G	32	25	27	28	14'-9"	G	32	26	27	28
Double 16 G Steel C	N9, N25, T	20'-0"	G	31	26	28	29	18'-11"	G	32	26	28	29	17'-11"	H1	32	26	27	29	17'-1"	H1	33	26	28	29	16'-4"	H1	33	26	28	29
Double 14 G Steel C	N9, N25, T	23'-3"	H1	33	27	29	30	22'-0"	H1	34	27	29	30	20'-11"	H1	34	27	28	30	20'-0"	H1	35	27	29	30	19'-2"	H1	35	27	29	30
Double 12 G Steel C	N9, N25, T	30'-11"	H2	36	30	31	33	29'-4"	H2	37	29	31	32	27'-11"	H2	38	29	30	32	26'-8"	H2	38	29	31	32	25'-8"	H3	39	29	31	33
Steel Cloverleaf	W	6'-1"	A1	21	20	22	23	5'-8"	A2	21	21	22	23	5'-4"	A2	22	22	23	24	5'-0"	A2	22	22	23	24	4'-8"	A2	22	22	24	25
DBL Steel Cloverleaf	AA	10'-8"	D	26	21	23	24	10'-1"	D	26	22	23	24	9'-7"	E	26	22	23	24	9'-2"	E	27	22	23	25	8'-10"	E	27	22	24	25
4x3 I Beam	Y	8'-3"	A3	23	20	22	23	7'-10"	A3	24	21	22	23	7'-5"	C	24	22	23	24	6'-11"	C	24	22	23	24	6'-6"	C	24	22	24	25
7x4 I Beam	Q	13'-5"	E	28	23	24	26	12'-7"	E	28	23	24	25	11'-9"	E	28	23	24	26	11'-0"	E	28	23	25	26	10'-4"	E	29	23	25	26

Header	Detail	trib 14'	Min Post Type	Uplift Footing (in)	8'	10'	12'	trib 15'	Min Post Type	Uplift Footing (in)	8'	10'	12'	trib 16'	Min Post Type	Uplift Footing (in)	8'	10'	12'	trib 17'	Min Post Type	Uplift Footing (in)	8'	10'	12'	trib 18'	Min Post Type	Uplift Footing (in)	8'	10'	12'
On Slab	On Slab	n/a	A3					n/a	A3					n/a	A3					n/a	A3					n/a	A3				
0.042"x3"x8"	N30	4'-6"	A2	22	23	24	25	4'-3"	A2	22	23	25	26	4'-1"	A2	22	24	25	26	3'-10"	A2	23	24	25	27	3'-8"	A3	23	24	26	27
Double 3"x8"	N25	7'-5"	D	26	23	24	25	7'-1"	E	26	23	25	26	6'-9"	E	27	24	25	26	6'-6"	E	27	24	25	27	6'-3"	E	27	24	26	27
Double 2"x6.625"	N25	6'-10"	D	26	23	24	25	6'-6"	D	26	23	25	26	6'-3"	D	26	24	25	26	6'-0"	D	26	24	25	27	5'-10"	D	26	24	26	27
5.5" Extruded Fascia	L	6'-4"	C	25	23	24	25	6'-0"	C	25	23	25	26	5'-9"	D	25	24	25	26	5'-7"	D	25	24	25	27	5'-4"	D	26	24	26	27
California Fascia	N10, G	5'-3"	A3	23	23	24	25	5'-0"	A3	24	23	25	26	4'-9"	A3	24	24	25	26	4'-6"	A3	24	24	25	27	4'-4"	A3	24	24	26	27
Classic Fascia	H	10'-7"	F	29	24	25	27	10'-2"	F	30	24	26	27	9'-10"	G	30	24	26	27	9'-7"	G	30	24	26	27	9'-3"	G	31	25	26	27
16 G Steel C	N9, T	6'-6"	D	25	23	24	25	6'-1"	C	25	23	25	26	5'-8"	C	25	24	25	26	5'-4"	C	25	24	25	27	5'-0"	C	25	24	26	27
14 G Steel C	N9, T	8'-9"	E	28	23	24	25	8'-2"	E	28	23	25	26	7'-8"	E	28	24	25	26	7'-2"	E	28	24	25	27	6'-10"	E	28	24	26	27
12 G Steel C	N9, T	14'-1"	H1	32	26	27	29	13'-5"	H1	33	26	27	29	12'-10"	H1	33	26	28	29	12'-4"	H1	33	26	28	29	11'-10"	H1	33	26	28	29
Double 16 G Steel C	N9, N25, T	15'-9"	H1	34	26	28	29	15'-2"	H1	34	27	28	30	14'-7"	H1	34	27	28	30	14'-1"	H1	35	27	29	30	13'-8"	H1	35	27	29	30
Double 14 G Steel C	N9, N25, T	18'-6"	H1	36	28	29	31	17'-10"	H1	36	28	29	31	17'-3"	H2	36	28	30	31	16'-8"	H2	37	28	30	31	16'-2"	H2	37	28	30	31
Double 12 G Steel C	N9, N25, T	24'-10"	H3	39	30	31	33	23'-11"	H3	40	30	32	33	23'-2"	H3	40	30	32	33	22'-5"	H3	40	30	32	34	21'-10"	H3	41	31	32	34
Steel Cloverleaf	W	4'-6"	A2	22	23	24	25	4'-3"	A2	22	23	25	26	4'-1"	A2	22	24	25	26	3'-11"	A3	23	24	25	27	3'-9"	A3	23	24	26	27
DBL Steel Cloverleaf	AA	8'-6"	E	27	23	24	25	8'-3"	E	28	23	25	26	7'-11"	E	28	24	25	26	7'-8"	E	28	24	25	27	7'-6"	E	29	24	26	27
4x3 I Beam	Y	6'-2"	C	25	23	24	25	5'-10"	C	25	23	25	26	5'-6"	C	25	24	25	26	5'-3"	C	25	24	25	27	5'-0"	C	25	24	26	27
7x4 I Beam	Q	9'-9"	E	29	23	25	26	9'-3"	E	29	24	25	26	8'-9"	E	29	24	25	26	8'-4"	F	29	24	25	27	7'-11"	F	29	24	26	27

Amerimax Exterior Home Products
28921 US Hwy 74
Romoland, CA 92585

Carl Putnam, P. E.
3441 Ivylink Place
Lynchburg, VA 24503
carlputnam@comcast.net

Registered Professional Engineer (Civil) CERTIFICATE NO. 39702 CARL PUTNAM Date Signed ARIZONA U.S.A. Expires 09/30/2024

JAN 20 2023

SECTION 5.0 POST SPACING, POST TYPE AND FOOTING SIZE FOR SOLID COVERS

Roof Solidity: 100%

Ground Snow Load: 10 psf **Live Load: 10 psf** **Wind Speed: 100 MPH EXPOSURE C or 115 MPH EXPOSURE B** **Seismic Ss= 150%** **Seismic Design Category D** **Structures are Attached to Existing Building**

Table 5.3a — cubic footing "d"; Constrained Footing (in), Max Post Length 8', 10', 12'

Header	Detail	trib 3'	Min Post Type	Uplift Footing (in)	8'	10'	12'	trib 3.5'	Min Post Type	Uplift Footing (in)	8'	10'	12'	trib 4'	Min Post Type	Uplift Footing (in)	8'	10'	12'	trib 4.5'	Min Post Type	Uplift Footing (in)	8'	10'	12'	trib 5'	Min Post Type	Uplift Footing (in)	8'	10'	12'	trib 5.5'	Min Post Type	Uplift Footing (in)	8'	10'	12'
On Slab	On Slab	22'-8"	A3					19'-5"	A3					17'-0"	A3					15'-1"	A3					13'-7"	A3					12'-4"	A3				
0.042"x3"x8"	N30	12'-4"	A1	22	18	19	20	11'-3"	A1	23	18	20	20	10'-5"	A1	23	19	20	21	9'-8"	A1	24	20	21	22	9'-1"	A1	24	20	21	22	8'-7"	A1	24	21	22	23
Double 3"x8"	N25	18'-0"	A1	25	18	20	21	16'-7"	A2	26	19	20	21	15'-5"	A2	27	19	20	21	14'-5"	A2	27	20	21	22	13'-8"	A3	27	20	21	22	12'-11"	A3	28	21	22	23
Double 2"x6.625"	N25	16'-0"	A1	24	18	19	20	14'-9"	A1	25	18	20	20	13'-9"	A2	26	19	20	21	12'-11"	A2	26	20	21	22	12'-2"	A2	26	20	21	22	11'-7"	A2	27	21	22	23
5.5" Extruded Fascia	L	15'-6"	A1	24	18	19	20	14'-3"	A1	25	18	20	20	13'-2"	A1	25	19	20	21	12'-4"	A2	26	20	21	22	11'-8"	A2	26	20	21	22	11'-0"	A2	26	21	22	23
California Fascia	N10, G	13'-8"	A1	23	18	19	20	12'-6"	A1	24	18	20	20	11'-7"	A1	24	19	20	21	10'-9"	A1	25	20	21	22	10'-2"	A1	25	20	21	22	9'-7"	A1	25	21	22	23
Classic Fascia	H	22'-8"	A3	27	20	21	22	21'-0"	A3	28	20	21	22	19'-7"	B	29	20	22	23	18'-6"	C	29	21	22	23	17'-6"	C	30	21	22	23	16'-9"	D	30	21	22	23
16 G Steel C	N9, T	21'-2"	A2	27	19	20	21	19'-1"	A3	27	20	21	22	17'-6"	A3	28	20	21	22	16'-1"	A3	28	20	21	22	15'-0"	A3	28	20	21	22	14'-0"	A3	29	21	22	23
14 G Steel C	N9, T	25'-3"	A3	28	20	21	22	22'-11"	C	29	20	22	23	21'-0"	C	29	21	22	23	19'-6"	C	30	21	22	23	18'-2"	D	30	21	22	23	17'-1"	D	31	21	23	24
12 G Steel C	N9, T	36'-5"	E	32	22	23	25	33'-3"	E	33	22	24	25	30'-9"	E	33	23	24	25	28'-8"	E	34	23	24	26	26'-10"	E	34	23	25	26	25'-4"	F	35	24	25	26
Double 16 G Steel C	N9, N25, T	35'-4"	E	32	22	23	24	32'-8"	E	33	22	24	25	30'-5"	E	33	23	24	25	28'-8"	E	34	23	24	26	27'-1"	E	35	23	25	26	25'-10"	F	35	24	25	26
Double 14 G Steel C	N9, N25, T	40'-0"	E	33	23	24	25	37'-6"	E	34	23	25	26	35'-0"	F	35	24	25	26	33'-0"	F	36	24	25	27	31'-3"	G	36	24	26	27	29'-9"	G	37	25	26	27
Double 12 G Steel C	N9, N25, T	40'-0"	E	33	23	24	25	40'-0"	F	35	24	25	26	40'-0"	G	36	24	26	27	40'-0"	G	38	25	27	28	40'-0"	H1	39	26	27	29	39'-4"	H1	40	26	28	29
Steel Cloverleaf	W	12'-1"	A1	22	18	19	20	11'-0"	A1	23	18	20	20	10'-2"	A1	23	19	20	21	9'-5"	A1	23	20	21	22	8'-10"	A1	24	20	21	22	8'-4"	A1	24	21	22	23
DBL Steel Cloverleaf	AA	18'-5"	A2	26	19	20	21	17'-1"	A2	26	19	20	21	15'-11"	A2	27	19	20	21	15'-0"	A3	27	20	21	22	14'-3"	A3	28	20	21	22	13'-7"	A3	28	21	22	23
4x3 I Beam	Y	10'-10"	A1	21	18	19	20	10'-5"	A1	22	18	20	20	10'-1"	A1	23	19	20	21	9'-10"	A1	24	20	21	22	9'-7"	A1	24	20	21	22	9'-4"	A1	25	21	22	23
7x4 I Beam	Q	15'-4"	A1	24	18	19	20	14'-9"	A1	25	18	20	20	14'-4"	A2	26	19	20	21	13'-11"	A2	27	20	21	22	13'-6"	A3	27	20	21	22	13'-2"	A3	28	21	22	23

Header	Detail	trib 6'	Min Post Type	Uplift Footing (in)	8'	10'	12'	trib 6.5'	Min Post Type	Uplift Footing (in)	8'	10'	12'	trib 7'	Min Post Type	Uplift Footing (in)	8'	10'	12'	trib 7.5'	Min Post Type	Uplift Footing (in)	8'	10'	12'	trib 8'	Min Post Type	Uplift Footing (in)	8'	10'	12'
On Slab	On Slab	11'-4"	A3					10'-5"	A1					9'-8"	A3					9'-1"	A3					8'-6"	A3				
0.042"x3"x8"	N30	8'-1"	A1	25	21	22	23	7'-8"	A1	25	22	23	24	7'-4"	A1	25	22	23	24	7'-0"	A1	25	22	24	25	6'-8"	A1	25	23	24	25
Double 3"x8"	N25	12'-4"	A3	28	21	22	23	11'-9"	A3	29	22	23	24	11'-3"	B	29	22	23	24	10'-10"	C	29	22	24	25	10'-5"	C	29	23	24	25
Double 2"x6.625"	N25	11'-0"	A3	27	21	22	23	10'-7"	A3	28	22	23	24	10'-1"	A3	28	22	23	24	9'-9"	A3	28	22	24	25	9'-5"	A3	28	23	24	25
5.5" Extruded Fascia	L	10'-6"	A2	27	21	22	23	10'-0"	A2	27	22	23	24	9'-7"	A3	27	22	23	24	9'-2"	A3	28	22	24	25	8'-10"	A3	28	23	24	25
California Fascia	N10, G	9'-1"	A1	25	21	22	23	8'-7"	A2	26	22	23	24	8'-3"	A2	26	22	23	24	7'-10"	A2	26	22	24	25	7'-7"	A2	26	23	24	25
Classic Fascia	H	16'-0"	D	31	21	23	24	15'-4"	D	31	22	23	24	14'-10"	D	32	22	23	24	14'-4"	E	32	22	24	25	13'-10"	E	32	23	24	25
16 G Steel C	N9, T	13'-2"	C	29	21	22	23	12'-6"	C	29	22	23	24	11'-10"	C	29	22	23	24	11'-3"	C	29	22	24	25	10'-9"	C	30	23	24	25
14 G Steel C	N9, T	16'-1"	D	31	21	23	24	15'-3"	D	31	22	23	24	14'-6"	D	31	22	23	24	13'-9"	D	32	22	24	25	13'-2"	E	32	23	24	25
12 G Steel C	N9, T	24'-0"	F	35	24	25	26	22'-10"	F	36	24	25	27	21'-10"	G	36	24	26	27	20'-11"	G	36	24	26	27	20'-1"	G	37	24	26	27
Double 16 G Steel C	N9, N25, T	24'-8"	F	36	24	25	27	23'-8"	G	36	24	26	27	22'-9"	G	36	24	26	27	21'-11"	G	37	25	26	27	21'-2"	G	37	25	26	27
Double 14 G Steel C	N9, N25, T	28'-6"	G	37	25	26	27	27'-4"	G	38	25	27	28	26'-4"	G	38	25	27	28	25'-5"	G	39	25	27	28	24'-7"	H1	39	26	27	28
Double 12 G Steel C	N9, N25, T	37'-8"	H1	41	27	28	30	36'-2"	H1	41	27	28	30	34'-10"	H1	42	27	29	30	33'-8"	H1	42	27	29	30	32'-7"	H1	43	28	29	31
Steel Cloverleaf	W	7'-10"	A1	24	21	22	23	7'-6"	A1	25	22	23	24	7'-1"	A1	25	22	23	24	6'-10"	A1	25	22	24	25	6'-6"	A1	25	23	24	25
DBL Steel Cloverleaf	AA	13'-0"	B	29	21	22	23	12'-6"	C	29	22	23	24	12'-0"	C	29	22	23	24	11'-7"	C	30	22	24	25	11'-3"	D	30	23	24	25
4x3 I Beam	Y	9'-2"	A2	26	21	22	23	8'-11"	A2	26	22	23	24	8'-9"	A2	27	22	23	24	8'-8"	A2	27	22	24	25	8'-6"	A3	27	23	24	25
7x4 I Beam	Q	12'-11"	B	29	21	22	23	12'-8"	C	29	22	23	24	12'-5"	C	30	22	23	24	12'-3"	D	30	22	24	25	12'-0"	D	31	23	24	25

Header	Detail	trib 9'	Min Post Type	Uplift Footing (in)	8'	10'	12'	trib 10'	Min Post Type	Uplift Footing (in)	8'	10'	12'	trib 11'	Min Post Type	Uplift Footing (in)	8'	10'	12'	trib 12'	Min Post Type	Uplift Footing (in)	8'	10'	12'	trib 13'	Min Post Type	Uplift Footing (in)	8'	10'	12'
On Slab	On Slab	7'-6"	A3					6'-9"	A3					6'-2"	A3					5'-8"	A3					5'-2"	A3				
0.042"x3"x8"	N30	6'-2"	A2	26	23	25	26	5'-9"	A2	26	24	26	27	5'-4"	A2	26	25	26	27	5'-0"	A2	26	25	27	28	4'-9"	A2	27	26	27	29
Double 3"x8"	N25	9'-8"	C	30	23	25	26	9'-1"	D	30	24	26	27	8'-7"	D	31	25	26	27	8'-1"	D	31	25	27	28	7'-8"	D	31	26	27	29
Double 2"x6.625"	N25	8'-9"	B	29	23	25	26	8'-3"	C	29	24	26	27	7'-10"	C	30	25	26	27	7'-5"	C	30	25	27	28	7'-1"	D	30	26	27	29
5.5" Extruded Fascia	L	8'-3"	A3	28	23	25	26	7'-9"	A3	29	24	26	27	7'-3"	C	29	25	26	27	6'-11"	C	29	25	27	28	6'-6"	C	30	26	27	29
California Fascia	N10, G	7'-0"	A2	27	23	25	26	6'-6"	A3	27	24	26	27	6'-1"	A3	27	25	26	27	5'-9"	A3	28	25	27	28	5'-5"	A3	28	26	27	29
Classic Fascia	H	13'-1"	E	33	23	25	26	12'-5"	E	34	24	26	27	11'-10"	E	34	25	26	27	11'-4"	E	35	25	27	28	10'-10"	F	35	26	27	29
16 G Steel C	N9, T	9'-10"	C	30	23	25	26	8'-11"	D	30	24	26	27	8'-2"	D	30	25	26	27	7'-5"	D	30	25	27	28	6'-10"	D	30	26	27	29
14 G Steel C	N9, T	12'-2"	E	32	23	25	26	11'-3"	E	32	24	26	27	10'-6"	E	33	25	26	27	9'-10"	E	33	25	27	28	9'-3"	E	33	26	27	29
12 G Steel C	N9, T	18'-7"	G	37	25	26	27	17'-5"	G	38	25	26	28	16'-4"	G	38	25	27	28	15'-5"	G	38	25	27	28	14'-8"	G	39	26	27	29
Double 16 G Steel C	N9, N25, T	19'-10"	G	38	25	27	28	18'-9"	G	38	25	27	28	17'-10"	H1	39	26	27	28	17'-0"	H1	40	26	27	29	16'-3"	H1	40	26	28	29
Double 14 G Steel C	N9, N25, T	23'-1"	H1	40	26	28	29	21'-11"	H1	40	26	28	29	20'-10"	H1	41	27	28	30	19'-11"	H1	42	27	29	30	19'-1"	H1	42	27	29	30
Double 12 G Steel C	N9, N25, T	30'-8"	H2	44	28	30	31	29'-1"	H2	45	28	30	31	27'-9"	H2	45	29	30	32	26'-7"	H2	46	29	31	32	25'-6"	H3	47	29	31	33
Steel Cloverleaf	W	6'-0"	A1	25	23	25	26	5'-7"	A2	26	24	26	27	5'-3"	A2	26	25	26	27	4'-11"	A2	26	25	27	28	4'-8"	A2	26	26	27	29
DBL Steel Cloverleaf	AA	10'-7"	D	31	23	25	26	10'-0"	D	31	24	26	27	9'-7"	E	32	25	26	27	9'-2"	E	32	25	27	28	8'-9"	E	33	26	27	29
4x3 I Beam	Y	8'-2"	A3	28	23	25	26	7'-9"	B	29	24	26	27	7'-4"	C	29	25	26	27	6'-10"	C	29	25	27	28	6'-5"	C	29	26	27	29
7x4 I Beam	Q	11'-8"	E	32	23	25	26	11'-5"	E	33	24	26	27	11'-2"	E	33	25	26	27	10'-11"	E	34	25	27	28	10'-3"	E	34	26	27	29

Header	Detail	trib 14'	Min Post Type	Uplift Footing (in)	8'	10'	12'	trib 15'	Min Post Type	Uplift Footing (in)	8'	10'	12'	trib 16'	Min Post Type	Uplift Footing (in)	8'	10'	12'	trib 17'	Min Post Type	Uplift Footing (in)	8'	10'	12'	trib 18'	Min Post Type	Uplift Footing (in)	8'	10'	12'
On Slab	On Slab	4'-10"	A3					4'-6"	A3					4'-3"	A3					4'-0"	A3					3'-9"	A3				
0.042"x3"x8"	N30	4'-5"	A2	27	26	28	29	4'-3"	A2	27	27	28	30	4'-0"	A2	27	27	29	30	3'-10"	A3	27	28	29	31	3'-8"	A3	27	28	30	31
Double 3"x8"	N25	7'-4"	D	31	26	28	29	7'-0"	E	32	27	28	30	6'-8"	E	32	27	29	30	6'-5"	E	32	28	29	31	6'-2"	E	32	28	30	31
Double 2"x6.625"	N25	6'-9"	D	31	26	28	29	6'-6"	D	31	27	28	30	6'-3"	D	31	27	29	30	6'-0"	D	31	28	29	31	5'-9"	E	32	28	30	31
5.5" Extruded Fascia	L	6'-3"	C	30	26	28	29	6'-0"	D	30	27	28	30	5'-9"	D	30	27	29	30	5'-6"	D	31	28	29	31	5'-3"	D	31	28	30	31
California Fascia	N10, G	5'-2"	A3	28	26	28	29	4'-11"	A3	28	27	28	30	4'-8"	A3	28	27	29	30	4'-6"	A3	29	28	29	31	4'-4"	B	29	28	30	31
Classic Fascia	H	10'-6"	F	35	26	28	29	10'-1"	F	36	27	28	30	9'-9"	G	36	27	29	30	9'-6"	G	37	28	29	31	9'-2"	G	37	28	30	31
16 G Steel C	N9, T	6'-5"	D	30	26	28	29	5'-11"	D	30	27	28	30	5'-7"	D	30	27	29	30	5'-3"	D	30	28	29	31	4'-11"	D	30	28	30	31
14 G Steel C	N9, T	8'-8"	E	33	26	28	29	8'-1"	E	33	27	28	30	7'-7"	E	33	27	29	30	7'-1"	E	33	28	29	31	6'-8"	E	33	28	30	31
12 G Steel C	N9, T	13'-11"	H1	39	26	28	29	13'-4"	H1	39	27	28	30	12'-9"	H1	40	27	29	30	12'-2"	H1	40	28	29	31	11'-9"	H1	40	28	30	31
Double 16 G Steel C	N9, N25, T	15'-7"	H1	40	26	28	29	15'-0"	H1	41	27	28	30	14'-6"	H1	41	27	29	30	14'-0"	H1	42	28	29	31	13'-6"	H1	42	28	30	31
Double 14 G Steel C	N9, N25, T	18'-4"	H1	43	28	29	31	17'-8"	H1	43	28	29	31	17'-1"	H2	44	28	30	31	16'-7"	H2	44	28	30	31	16'-1"	H2	44	28	30	31
Double 12 G Steel C	N9, N25, T	24'-7"	H3	47	30	31	33	23'-9"	H3	48	30	32	33	23'-0"	H3	48	30	32	33	22'-3"	H3	49	30	32	34	21'-8"	H4	49	31	32	34
Steel Cloverleaf	W	4'-5"	A2	27	26	28	29	4'-3"	A2	27	27	28	30	4'-0"	A2	27	27	29	30	3'-10"	A3	27	28	29	31	3'-8"	A3	27	28	30	31
DBL Steel Cloverleaf	AA	8'-5"	E	33	26	28	29	8'-2"	E	33	27	28	30	7'-11"	E	34	27	29	30	7'-8"	E	34	28	29	31	7'-5"	E	34	28	30	31
4x3 I Beam	Y	6'-1"	C	30	26	28	29	5'-9"	C	30	27	28	30	5'-5"	C	30	27	29	30	5'-2"	C	30	28	29	31	4'-11"	D	30	28	30	31
7x4 I Beam	Q	9'-8"	E	35	26	28	29	9'-1"	E	35	27	28	30	8'-8"	F	35	27	29	30	8'-3"	F	35	28	29	31	7'-10"	F	35	28	30	31

Ground Snow Load: 10 psf **Live Load: 10 psf** **Wind Speed: 100 MPH EXPOSURE C or 120 MPH EXPOSURE B** **Seismic Ss= 150%** **Seismic Design Category D** **Freestanding Structures**

Table 5.3b — cubic footing "d"; Constrained Footing (in), Max Post Length 8', 10', 12'

Header	Detail	trib 3'	Min Post Type	Uplift Footing (in)	8'	10'	12'	trib 3.5'	Min Post Type	Uplift Footing (in)	8'	10'	12'	trib 4'	Min Post Type	Uplift Footing (in)	8'	10'	12'	trib 4.5'	Min Post Type	Uplift Footing (in)	8'	10'	12'	trib 5'	Min Post Type	Uplift Footing (in)	8'	10'	12'	trib 5.5'	Min Post Type	Uplift Footing (in)	8'	10'	12'
On Slab	On Slab	n/a	A3					n/a	A3					n/a	A3					n/a	A3					n/a	A3					n/a	A3				
0.042"x3"x8"	N30	11'-9"	A1	19	26	27	28	10'-10"	A1	20	25	26	28	10'-0"	A1	20	25	26	27	9'-3"	A1	20	24	25	27	8'-8"	A1	21	24	25	26	8'-2"	A1	21	23	25	26
Double 3"x8"	N25	17'-3"	A2	22	28	30	31	16'-0"	A2	23	28	29	31	14'-11"	A2	23	27	29	30	13'-10"	A3	23	27	28	30	13'-1"	A3	24	26	28	29	12'-5"	A3	24	26	27	29
Double 2"x6.625"	N25	15'-4"	A1	21	26	28	29	14'-3"	A1	22	26	27	28	13'-4"	A2	22	25	27	28	12'-4"	A2	23	25	26	27	11'-9"	A2	23	24	26	27	11'-2"	A3	23	24	25	27
5.5" Extruded Fascia	L	14'-10"	A1	21	25	26	27	13'-8"	A1	21	24	26	27	12'-9"	A1	22	24	25	26	11'-10"	A2	22	23	25	26	11'-2"	A2	23	23	24	25	10'-7"	A2	23	23	24	25
California Fascia	N10, G	13'-1"	A1	20	23	24	25	12'-0"	A1	21	22	24	25	11'-2"	A1	21	22	23	24	10'-3"	A1	21	22	23	24	9'-8"	A1	22	21	22	24	9'-2"	A1	22	21	22	23
Classic Fascia	H	21'-9"	A3	24	27	29	30	20'-3"	A3	24	27	29	30	19'-0"	C	25	27	28	29	17'-9"	C	25	26	28	29	16'-11"	D	26	26	27	29	16'-2"	D	26	25	27	28
16 G Steel C	N9, T	20'-1"	A2	23	29	31	32	18'-3"	A3	24	29	30	32	16'-9"	A3	24	28	30	31	15'-3"	A3	24	27	29	30	14'-3"	A3	25	27	28	30	13'-5"	B	25	26	28	29
14 G Steel C	N9, T	24'-0"	A3	25	31	32	34	21'-11"	C	25	30	32	33	20'-3"	C	26	29	31	33	18'-6"	C	26	29	30	32	17'-4"	D	26	28	30	31	16'-4"	D	26	28	29	31
12 G Steel C	N9, T	34'-9"	E	28	34	36	37	31'-11"	E	28	33	35	37	29'-8"	E	29	32	34	36	27'-3"	E	29	32	34	35	25'-9"	E	30	31	33	35	24'-4"	F	30	31	33	34
Double 16 G Steel C	N9, N25, T	33'-11"	E	28	33	35	37	31'-6"	E	28	33	35	36	29'-6"	E	29	32	34	36	27'-6"	E	29	32	34	35	26'-1"	F	30	31	33	35	24'-11"	F	30	31	33	34
Double 14 G Steel C	N9, N25, T	38'-11"	E	29	35	37	38	36'-2"	E	30	34	36	38	33'-11"	F	30	33	35	37	31'-8"	F	31	33	35	36	30'-1"	G	31	32	34	36	28'-9"	G	32	32	34	36
Double 12 G Steel C	N9, N25, T	40'-0"	E	29	35	37	39	40'-0"	F	31	35	37	39	40'-0"	G	32	35	37	39	40'-0"	G	33	35	37	39	39'-9"	H1	34	35	37	39	38'-1"	H1	35	34	36	38
Steel Cloverleaf	W	11'-7"	A1	19	20	21	22	10'-7"	A1	20	19	21	21	9'-9"	A1	20	19	20	21	9'-0"	A1	20	19	20	21	8'-5"	A1	21	19	21	22	8'-0"	A1	21	20	21	22
DBL Steel Cloverleaf	AA	17'-8"	A2	22	22	23	25	16'-6"	A2	23	22	23	24	15'-6"	A3	23	21	23	24	14'-5"	A3	24	21	22	23	13'-9"	A3	24	21	22	23	13'-2"	A3	25	20	22	23
4x3 I Beam	Y	11'-10"	A1	19	21	23	24	11'-6"	A1	20	21	23	24	11'-1"	A1	21	21	22	23	10'-9"	A1	22	21	22	23	10'-7"	A2	22	21	22	23	10'-2"	A2	23	21	22	23
7x4 I Beam	Q	16'-9"	A1	22	27	29	30	16'-4"	A2	23	27	28	30	15'-8"	A3	23	27	28	29	15'-3"	A3	24	26	28	29	14'-11"	C	25	26	28	29	14'-6"	C	25	26	28	29

Header	Detail	trib 6'	Min Post Type	Uplift Footing (in)	8'	10'	12'	trib 6.5'	Min Post Type	Uplift Footing (in)	8'	10'	12'	trib 7'	Min Post Type	Uplift Footing (in)	8'	10'	12'	trib 7.5'	Min Post Type	Uplift Footing (in)	8'	10'	12'	trib 8'	Min Post Type	Uplift Footing (in)	8'	10'	12'
On Slab	On Slab	n/a	A3					n/a	A3					n/a	A3					n/a	A3					n/a	A3				
0.042"x3"x8"	N30	7'-9"	A1	21	23	24	26	7'-4"	A1	21	23	24	25	7'-0"	A1	22	22	24	25	6'-8"	A1	22	22	23	25	6'-5"	A2	22	22	23	24
Double 3"x8"	N25	11'-10"	A3	25	26	27	28	11'-3"	B	25	25	27	28	10'-10"	C	25	25	26	28	10'-5"	C	25	25	26	27	10'-0"	C	25	25	26	27
Double 2"x6.625"	N25	10'-8"	A3	24	24	25	26	10'-1"	A3	24	23	25	26	9'-9"	A3	24	23	25	26	9'-5"	A3	24	23	24	26	9'-1"	A3	25	23	24	25
5.5" Extruded Fascia	L	10'-1"	A2	23	22	24	25	9'-7"	A3	23	22	23	24	9'-2"	A3	24	22	23	24	8'-10"	A3	24	22	23	24	8'-6"	A3	24	22	23	24
California Fascia	N10, G	8'-9"	A2	22	21	22	23	8'-3"	A2	22	21	22	23	7'-10"	A2	23	21	22	24	7'-7"	A2	23	22	23	24	7'-3"	A2	23	22	23	24
Classic Fascia	H	15'-6"	D	27	25	27	28	14'-10"	D	27	25	26	28	14'-4"	E	27	25	26	27	13'-10"	E	28	25	26	27	13'-5"	E	28	24	26	27
16 G Steel C	N9, T	12'-8"	C	25	26	28	29	11'-10"	C	25	26	27	28	11'-3"	C	25	25	27	28	10'-9"	C	26	25	26	28	10'-3"	C	26	25	26	27
14 G Steel C	N9, T	15'-5"	D	27	27	29	30	14'-6"	D	27	27	29	30	13'-9"	D	27	27	28	30	13'-2"	E	27	26	28	29	12'-8"	E	28	26	28	29
12 G Steel C	N9, T	23'-2"	F	31	30	32	34	21'-10"	F	31	30	32	33	20'-11"	G	31	30	31	33	20'-1"	G	31	29	31	32	19'-4"	G	32	29	31	32
Double 16 G Steel C	N9, N25, T	23'-11"	F	31	31	32	34	22'-9"	G	31	30	32	34	21'-11"	G	32	30	32	33	21'-2"	G	32	30	31	33	20'-6"	G	32	29	31	33
Double 14 G Steel C	N9, N25, T	27'-7"	G	32	32	34	35	26'-4"	G	33	31	33	35	25'-5"	G	33	31	33	34	24'-7"	H1	34	31	33	34	23'-10"	H1	34	31	32	34
Double 12 G Steel C	N9, N25, T	36'-6"	H1	36	34	36	38	34'-10"	H1	36	34	36	37	33'-8"	H1	36	33	35	37	32'-7"	H1	37	33	35	37	31'-7"	H2	37	33	35	36
Steel Cloverleaf	W	7'-7"	A1	21	20	22	23	7'-1"	A1	21	21	22	23	6'-10"	A1	21	21	22	24	6'-6"	A1	22	22	23	24	6'-3"	A1	22	22	23	24
DBL Steel Cloverleaf	AA	12'-7"	C	25	20	22	23	12'-0"	C	25	21	22	23	11'-7"	C	26	21	22	24	11'-3"	D	26	22	23	24	10'-11"	D	26	22	23	24
4x3 I Beam	Y	9'-9"	A2	23	20	22	23	9'-4"	A2	23	21	22	23	9'-0"	A3	24	21	22	24	8'-8"	A3	24	22	23	24	8'-5"	A3	24	22	23	24
7x4 I Beam	Q	14'-2"	D	26	26	27	29	14'-0"	D	27	26	27	29	13'-8"	D	27	26	27	28	13'-5"	E	28	26	27	28	13'-3"	E	28	25	27	28

Header	Detail	trib 9'	Min Post Type	Uplift Footing (in)	8'	10'	12'	trib 10'	Min Post Type	Uplift Footing (in)	8'	10'	12'	trib 11'	Min Post Type	Uplift Footing (in)	8'	10'	12'	trib 12'	Min Post Type	Uplift Footing (in)	8'	10'	12'	trib 13'	Min Post Type	Uplift Footing (in)	8'	10'	12'
On Slab	On Slab	n/a	A3					n/a	A3					n/a	A3					n/a	A3					n/a	A3				
0.042"x3"x8"	N30	5'-11"	A2	22	23	24	25	5'-6"	A2	22	23	25	26	5'-1"	A2	23	24	25	26	4'-9"	A2	23	24	26	27	4'-6"	A2	23	25	26	28
Double 3"x8"	N25	9'-4"	C	26	24	26	27	8'-9"	D	26	24	25	26	8'-2"	D	27	24	25	26	7'-9"	D	27	24	26	27	7'-4"	D	27	25	26	28
Double 2"x6.625"	N25	8'-5"	C	25	23	24	25	8'-0"	C	25	23	25	26	7'-6"	C	26	24	25	26	7'-2"	D	26	24	26	27	6'-9"	D	26	25	26	28
5.5" Extruded Fascia	L	7'-11"	A3	25	23	24	25	7'-5"	C	25	23	25	26	7'-0"	C	25	24	25	26	6'-7"	C	25	24	26	27	6'-3"	C	26	25	26	28
California Fascia	N10, G	6'-8"	A2	23	23	24	25	6'-3"	A3	23	23	25	26	5'-10"	A3	24	24	25	26	5'-6"	A3	24	24	26	27	5'-2"	A3	24	25	26	28
Classic Fascia	H	12'-8"	E	29	24	25	27	12'-0"	E	29	24	25	26	11'-5"	E	30	24	25	26	11'-0"	F	30	24	26	27	10'-6"	F	30	25	26	28
16 G Steel C	N9, T	9'-4"	C	26	24	26	27	8'-5"	D	26	23	25	26	7'-7"	C	26	24	25	26	7'-0"	D	26	24	26	27	6'-5"	C	26	25	26	28
14 G Steel C	N9, T	11'-7"	E	28	25	27	28	10'-9"	E	28	25	26	28	10'-0"	E	28	25	26	27	9'-5"	E	29	24	26	27	8'-8"	E	29	25	26	28
12 G Steel C	N9, T	17'-10"	G	32	28	30	32	16'-9"	G	33	28	30	31	15'-8"	G	33	28	29	30	14'-10"	G	33	27	29	30	14'-0"	H1	34	27	28	30
Double 16 G Steel C	N9, N25, T	19'-2"	G	33	29	31	32	18'-2"	H1	33	29	30	32	17'-2"	H1	34	28	30	31	16'-5"	H1	34	28	29	31	15'-8"	H1	35	28	29	31
Double 14 G Steel C	N9, N25, T	22'-4"	H1	35	30	32	33	21'-2"	H1	35	30	31	33	20'-1"	H1	36	29	31	32	19'-3"	H1	36	29	31	32	18'-5"	H1	37	29	30	32
Double 12 G Steel C	N9, N25, T	29'-8"	H2	38	32	34	36	28'-3"	H2	39	32	34	35	26'-10"	H2	39	32	33	35	25'-9"	H3	40	31	33	35	24'-8"	H3	40	31	33	34
Steel Cloverleaf	W	5'-9"	A2	22	23	24	25	5'-5"	A2	22	23	25	26	5'-0"	A2	23	24	25	26	4'-9"	A2	23	24	26	27	4'-6"	A2	23	25	26	28
DBL Steel Cloverleaf	AA	10'-3"	D	27	23	24	25	9'-9"	D	27	23	25	26	9'-3"	E	28	24	25	26	8'-10"	E	28	24	26	27	8'-6"	E	28	25	26	28
4x3 I Beam	Y	7'-11"	A3	25	23	24	25	7'-6"	C	25	23	25	26	7'-0"	C	25	24	25	26	6'-6"	C	25	24	26	27	6'-1"	C	25	25	26	28
7x4 I Beam	Q	12'-10"	E	29	25	27	28	11'-11"	E	29	25	26	28	11'-1"	E	29	24	26	27	10'-5"	E	30	24	26	27	9'-9"	E	30	25	26	28

Header	Detail	trib 14'	Min Post Type	Uplift Footing (in)	8'	10'	12'	trib 15'	Min Post Type	Uplift Footing (in)	8'	10'	12'	trib 16'	Min Post Type	Uplift Footing (in)	8'	10'	12'	trib 17'	Min Post Type	Uplift Footing (in)	8'	10'	12'	trib 18'	Min Post Type	Uplift Footing (in)	8'	10'	12'
On Slab	On Slab	n/a	A3					n/a	A3					n/a	A3					n/a	A3					n/a	A3				
0.042"x3"x8"	N30	4'-3"	A2	23	25	27	28	4'-0"	A2	23	26	27	29	3'-10"	A3	23	26	28	29	3'-7"	A3	23	27	28	30	3'-5"	A3	23	27	29	30
Double 3"x8"	N25	7'-0"	E	27	25	27	28	6'-8"	E	28	26	27	29	6'-5"	E	28	26	28	29	6'-2"	E	28	27	28	30	5'-11"	E	28	27	29	30
Double 2"x6.625"	N25	6'-6"	D	27	25	27	28	6'-3"	D	27	26	27	29	6'-0"	D	27	26	28	29	5'-9"	E	27	27	28	30	5'-6"	E	27	27	29	30
5.5" Extruded Fascia	L	6'-0"	D	26	25	27	28	5'-9"	D	26	26	27	29	5'-6"	D	26	26	28	29	5'-3"	D	26	27	28	30	5'-1"	D	27	27	29	30
California Fascia	N10, G	4'-11"	A3	24	25	27	28	4'-8"	A3	24	26	27	29	4'-6"	A3	25	26	28	29	4'-3"	B	25	27	28	30	4'-1"	C	25	27	29	30
Classic Fascia	H	10'-2"	F	31	25	27	28	9'-9"	G	31	26	27	29	9'-6"	G	32	26	28	29	9'-2"	G	32	27	28	30	8'-10"	G	32	27	29	30
16 G Steel C	N9, T	6'-0"	D	26	25	27	28	5'-7"	C	26	26	27	29	5'-3"	D	26	26	28	29	4'-11"	C	26	27	28	30	4'-8"	D	26	27	29	30
14 G Steel C	N9, T	8'-1"	E	29	25	27	28	7'-7"	E	29	26	27	29	7'-1"	E	29	26	28	29	6'-8"	E	29	27	28	30	6'-4"	E	29	27	29	30
12 G Steel C	N9, T	13'-4"	H1	34	26	28	29	12'-9"	H1	34	26	28	29	12'-2"	H1	34	26	28	29	11'-8"	H1	34	27	28	30	11'-3"	H1	35	27	29	30
Double 16 G Steel C	N9, N25, T	15'-1"	H1	35	27	29	30	14'-6"	H1	36	27	29	30	14'-0"	H1	36	27	28	30	13'-6"	H1	36	27	28	30	13'-1"	H1	36	27	29	30
Double 14 G Steel C	N9, N25, T	17'-9"	H1	37	28	30	31	17'-1"	H2	38	28	30	31	16'-7"	H2	38	28	30	31	16'-0"	H2	38	28	30	31	15'-6"	H2	39	28	30	31
Double 12 G Steel C	N9, N25, T	23'-10"	H3	41	31	32	34	23'-0"	H3	41	30	32	34	22'-3"	H3	42	30	32	33	21'-7"	H4	42	30	32	33	21'-0"	H4	43	30	32	34
Steel Cloverleaf	W	4'-3"	A2	23	25	27	28	4'-0"	A2	23	26	27	29	3'-10"	A3	23	26	28	29	3'-8"	A3	24	27	28	30	3'-6"	A3	24	27	29	30
DBL Steel Cloverleaf	AA	8'-2"	E	29	25	27	28	7'-11"	E	29	26	27	29	7'-8"	E	29	26	28	29	7'-5"	E	30	27	28	30	7'-2"	E	30	27	29	30
4x3 I Beam	Y	5'-9"	C	26	25	27	28	5'-5"	C	26	26	27	29	5'-2"	C	26	26	28	29	4'-11"	C	26	27	28	30	4'-8"	D	26	27	29	30
7x4 I Beam	Q	9'-2"	E	30	25	27	28	8'-8"	E	30	26	27	29	8'-3"	F	30	26	28	29	7'-10"	F	30	27	28	30	7'-6"	F	30	27	29	30

Amerimax Exterior Home Products
28921 US Hwy 74
Romoland, CA 92585

Carl Putnam, P. E.
3441 Ivylink Place
Lynchburg, VA 24503
carlputnam@comcast.net

Registered Professional Engineer (Civil) CERTIFICATE NO. 39702 CARL PUTNAM Date Signed ARIZONA, U.S.A. Expires 09/30/2024

SECTION 5.0 POST SPACING, POST TYPE AND FOOTING SIZE FOR SOLID COVERS

Roof Solidity: 100%

Ground Snow Load: 10 psf   Live Load: 10 psf   Wind Speed: 105 MPH EXPOSURE B   Seismic Ss= 150%   Seismic Design Category D   Structures are Attached to Existing Building

Table 5.4a — cubic footing "d" Constrained Footing (in), Max Post Length 8' / 10' / 12'

Header	Detail	trib 3'	Min Post Type	Uplift Footing (in)	8'	10'	12'	trib 3.5'	Min Post Type	Uplift Footing (in)	8'	10'	12'	trib 4'	Min Post Type	Uplift Footing (in)	8'	10'	12'	trib 4.5'	Min Post Type	Uplift Footing (in)	8'	10'	12'	trib 5'	Min Post Type	Uplift Footing (in)	8'	10'	12'	trib 5.5'	Min Post Type	Uplift Footing (in)	8'	10'	12'	trib 6'	Min Post Type	Uplift Footing (in)	8'	10'	12'	trib 6.5'	Min Post Type	Uplift Footing (in)	8'	10'	12'	trib 7'	Min Post Type	Uplift Footing (in)	8'	10'	12'	trib 7.5'	Min Post Type	Uplift Footing (in)	8'	10'	12'	trib 8'	Min Post Type	Uplift Footing (in)	8'	10'	12'
On Slab	On Slab	22'-8"	A3					19'-5"	A3					17'-0"	A3					15'-1"	A3					13'-7"	A3					12'-4"	A3					11'-4"	A3					10'-5"	A1					9'-8"	A3					9'-1"	A3					8'-6"	A3				
0.042"x3"x8"	N30	12'-4"	A1	21	17	18	19	11'-3"	A1	21	17	18	19	10'-5"	A1	21	18	19	20	9'-8"	A1	22	18	20	21	9'-1"	A1	22	19	20	21	8'-7"	A1	22	19	21	22	8'-1"	A1	23	20	21	22	7'-8"	A1	23	20	22	23	7'-5"	A1	23	21	22	23	7'-1"	A1	23	21	22	23	6'-9"	A1	23	21	23	24
Double 3"x8"	N25	18'-0"	A1	23	18	20	21	16'-7"	A2	24	19	20	21	15'-5"	A2	24	19	20	21	14'-5"	A2	25	19	21	21	13'-8"	A3	25	20	21	22	12'-11"	A3	26	20	21	22	12'-4"	A3	26	20	21	22	11'-9"	A3	26	20	22	23	11'-4"	B	27	21	22	23	10'-11"	C	27	21	22	23	10'-6"	C	27	21	23	24
Double 2"x6.625"	N25	16'-0"	A1	22	18	19	20	14'-9"	A1	23	18	19	20	13'-9"	A1	24	19	20	21	12'-11"	A2	24	19	20	21	12'-2"	A2	24	19	20	21	11'-7"	A2	25	19	21	22	11'-0"	A2	25	20	21	22	10'-7"	A3	25	20	22	23	10'-3"	A3	26	21	22	23	9'-10"	A3	26	21	22	23	9'-6"	A3	26	21	23	24
5.5" Extruded Fascia	L	15'-6"	A1	22	18	19	20	14'-3"	A1	23	18	19	20	13'-2"	A1	23	18	19	20	12'-4"	A1	24	19	20	21	11'-8"	A2	24	19	20	21	11'-0"	A2	24	19	21	22	10'-6"	A2	25	20	21	22	10'-0"	A2	25	20	22	23	9'-8"	A3	25	21	22	23	9'-3"	A3	25	21	22	23	8'-11"	A3	26	21	23	24
California Fascia	N10, G	13'-8"	A1	21	17	18	19	12'-6"	A1	22	18	19	19	11'-7"	A1	22	18	19	20	10'-9"	A1	23	18	20	21	10'-2"	A1	23	19	20	21	9'-7"	A1	23	19	21	22	9'-1"	A1	23	20	21	22	8'-7"	A2	24	20	22	23	8'-4"	A2	24	21	22	23	7'-11"	A2	24	21	22	23	7'-8"	A2	24	21	23	24
Classic Fascia	H	22'-8"	A3	25	20	21	22	21'-0"	A3	26	20	21	22	19'-7"	A3	26	20	22	23	18'-6"	C	27	21	22	23	17'-6"	C	27	21	22	23	16'-9"	D	28	21	22	23	16'-0"	D	28	21	23	24	15'-4"	D	29	22	23	24	14'-11"	D	29	22	23	24	14'-5"	E	29	22	23	24	14'-0"	E	30	22	24	25
16 G Steel C	N9, T	21'-2"	A2	25	19	20	21	19'-1"	A3	25	20	21	22	17'-6"	A3	25	20	21	22	16'-1"	A3	26	20	21	22	15'-0"	A3	26	20	21	22	14'-0"	A3	26	20	21	22	13'-2"	B	27	20	22	23	12'-6"	C	27	21	22	23	12'-0"	C	27	21	22	23	11'-5"	C	27	21	22	23	10'-10"	C	27	21	23	24
14 G Steel C	N9, T	25'-3"	A3	26	20	21	22	22'-11"	B	27	20	22	23	21'-0"	C	27	21	22	23	19'-6"	C	27	21	22	23	18'-2"	C	28	21	22	23	17'-1"	D	28	21	23	24	16'-1"	D	28	21	23	24	15'-3"	D	29	22	23	24	14'-8"	D	29	22	23	24	13'-11"	D	29	22	23	24	13'-4"	E	29	22	23	24
12 G Steel C	N9, T	36'-5"	E	30	22	23	25	33'-3"	E	30	22	24	25	30'-9"	E	31	23	24	25	28'-8"	E	31	23	24	26	26'-10"	E	32	23	25	26	25'-4"	E	32	24	25	26	24'-0"	F	32	24	25	26	22'-10"	F	33	24	25	27	22'-1"	F	33	24	26	27	21'-2"	G	33	24	26	27	20'-3"	G	34	24	26	27
Double 16 G Steel C	N9, N25, T	35'-4"	E	29	22	23	24	32'-8"	E	30	22	24	25	30'-5"	E	31	23	24	25	28'-8"	E	31	23	24	26	27'-1"	E	32	23	25	26	25'-10"	F	32	24	25	26	24'-8"	F	33	24	25	27	23'-8"	F	33	24	26	27	22'-11"	G	34	24	26	27	22'-1"	G	34	25	26	27	21'-4"	G	34	25	26	27
Double 14 G Steel C	N9, N25, T	40'-0"	E	30	23	24	25	37'-6"	E	31	23	25	26	35'-0"	E	32	24	25	26	33'-0"	F	33	24	25	27	31'-3"	G	33	24	26	27	29'-9"	G	34	25	26	27	28'-6"	G	34	25	26	27	27'-4"	G	35	25	27	28	26'-7"	G	35	25	27	28	25'-7"	G	36	26	27	28	24'-9"	H1	36	26	27	29
Double 12 G Steel C	N9, N25, T	40'-0"	E	30	23	24	25	40'-0"	E	32	24	25	26	40'-0"	G	34	24	26	27	40'-0"	G	35	25	27	28	40'-0"	H1	36	26	27	29	39'-4"	H1	37	26	28	29	37'-8"	H1	38	27	28	30	36'-2"	H1	38	27	28	30	35'-2"	H1	39	27	29	30	33'-11"	H1	39	27	29	30	32'-10"	H1	40	28	29	31
Steel Cloverleaf	W	12'-1"	A1	21	17	18	19	11'-0"	A1	21	17	18	19	10'-2"	A1	21	18	19	20	9'-5"	A1	22	18	20	21	8'-10"	A1	22	19	20	21	8'-4"	A1	22	19	21	22	7'-10"	A1	22	20	21	22	7'-6"	A1	23	20	22	23	7'-2"	A1	23	21	22	23	6'-11"	A1	23	21	22	23	6'-7"	A1	23	21	23	24
DBL Steel Cloverleaf	AA	18'-5"	A1	24	19	20	21	17'-1"	A2	24	19	20	21	15'-11"	A2	25	19	20	21	15'-0"	A3	25	20	21	22	14'-3"	A3	26	20	21	22	13'-7"	A3	26	20	21	22	13'-0"	A3	26	20	21	23	12'-6"	C	27	21	22	23	12'-2"	C	27	21	22	23	11'-8"	C	28	21	22	23	11'-4"	C	28	21	23	24
4x3 I Beam	Y	11'-6"	A1	20	17	18	18	11'-1"	A1	21	17	18	19	10'-9"	A1	22	18	19	20	10'-5"	A1	22	18	20	21	10'-2"	A1	23	19	20	21	9'-11"	A1	24	19	21	22	9'-9"	A2	24	20	21	22	9'-7"	A2	25	20	22	23	9'-4"	A2	25	21	22	23	9'-1"	A3	25	21	22	23	8'-9"	A3	26	21	23	24
7x4 I Beam	Q	16'-4"	A1	23	18	19	20	15'-8"	A1	24	19	20	21	15'-3"	A2	24	19	20	21	14'-9"	A3	25	19	21	22	14'-5"	A3	26	20	21	22	14'-1"	A3	26	20	21	22	13'-9"	C	27	21	22	23	13'-6"	C	28	21	22	23	13'-2"	D	28	21	22	24	13'-0"	D	28	21	23	24	12'-9"	D	29	22	23	24

Header	Detail	trib 9'	Min Post Type	Uplift Footing (in)	8'	10'	12'	trib 10'	Min Post Type	Uplift Footing (in)	8'	10'	12'	trib 11'	Min Post Type	Uplift Footing (in)	8'	10'	12'	trib 12'	Min Post Type	Uplift Footing (in)	8'	10'	12'	trib 13'	Min Post Type	Uplift Footing (in)	8'	10'	12'	trib 14'	Min Post Type	Uplift Footing (in)	8'	10'	12'	trib 15'	Min Post Type	Uplift Footing (in)	8'	10'	12'	trib 16'	Min Post Type	Uplift Footing (in)	8'	10'	12'	trib 17'	Min Post Type	Uplift Footing (in)	8'	10'	12'	trib 18'	Min Post Type	Uplift Footing (in)	8'	10'	12'
On Slab	On Slab	7'-6"	A3					6'-9"	A3					6'-2"	A3					5'-8"	A3					5'-2"	A3					4'-10"	A3					4'-6"	A3					4'-3"	A3					4'-0"	A3					3'-9"	A3				
0.042"x3"x8"	N30	6'-3"	A2	24	22	23	24	5'-9"	A2	24	23	24	25	5'-5"	A2	24	23	25	26	5'-1"	A2	24	24	25	26	4'-9"	A2	25	24	26	27	4'-6"	A2	25	25	26	27	4'-3"	A2	25	25	27	28	4'-1"	A2	25	26	27	28	3'-10"	A2	25	26	27	29	3'-8"	A3	25	26	28	29
Double 3"x8"	N25	9'-9"	C	28	22	23	24	9'-2"	D	28	23	24	25	8'-7"	D	28	23	25	26	8'-2"	D	29	24	25	26	7'-9"	D	29	24	26	27	7'-5"	D	29	25	26	27	7'-1"	E	29	25	27	28	6'-9"	E	30	26	27	28	6'-6"	E	30	26	27	29	6'-3"	E	30	26	28	29
Double 2"x6.625"	N25	8'-10"	B	27	22	23	24	8'-4"	C	27	23	24	25	7'-10"	C	27	23	25	26	7'-5"	C	28	24	25	26	7'-1"	D	28	24	26	27	6'-10"	D	28	25	26	27	6'-6"	D	29	25	27	28	6'-3"	D	29	26	27	28	6'-0"	D	29	26	27	29	5'-10"	D	29	26	28	29
5.5" Extruded Fascia	L	8'-4"	A3	26	22	23	24	7'-9"	A3	26	23	24	25	7'-4"	C	27	23	25	26	6'-11"	C	27	24	25	26	6'-7"	C	27	24	26	27	6'-4"	C	28	25	26	27	6'-0"	C	28	25	27	28	5'-9"	D	28	26	27	28	5'-7"	D	28	26	27	29	5'-4"	D	28	26	28	29
California Fascia	N10, G	7'-1"	A2	25	22	23	24	6'-7"	A2	25	23	24	25	6'-2"	A3	25	23	25	26	5'-10"	A3	25	24	25	26	5'-6"	A3	26	24	26	27	5'-3"	A3	26	25	26	27	5'-0"	A3	26	25	27	28	4'-9"	A3	26	26	27	28	4'-6"	A3	26	26	27	29	4'-4"	A3	27	26	28	29
Classic Fascia	H	13'-2"	E	30	23	24	25	12'-6"	E	31	23	24	25	11'-10"	E	31	23	25	26	11'-4"	E	32	24	25	26	10'-11"	F	32	24	26	27	10'-7"	F	33	25	26	27	10'-2"	F	33	25	27	28	9'-10"	G	33	26	27	28	9'-7"	G	34	26	27	29	9'-3"	G	34	26	28	29
16 G Steel C	N9, T	9'-11"	C	28	22	23	24	9'-1"	C	28	23	24	25	8'-3"	C	28	23	25	26	7'-6"	C	28	24	25	26	6'-11"	C	28	24	26	27	6'-6"	D	28	25	26	27	6'-1"	C	28	25	27	28	5'-8"	C	28	26	27	28	5'-4"	C	28	26	27	29	5'-0"	C	28	26	28	29
14 G Steel C	N9, T	12'-3"	E	30	22	23	25	11'-4"	E	30	23	24	25	10'-7"	E	30	23	25	26	9'-11"	E	30	24	25	26	9'-4"	E	31	24	26	27	8'-9"	E	31	25	26	27	8'-2"	E	31	25	27	28	7'-8"	E	31	26	27	28	7'-2"	E	31	26	27	29	6'-10"	E	31	26	28	29
12 G Steel C	N9, T	18'-9"	G	34	25	26	27	17'-6"	G	35	25	26	28	16'-6"	G	35	25	27	28	15'-7"	G	35	25	27	28	14'-9"	G	36	26	27	28	14'-1"	H1	36	26	27	29	13'-5"	H1	36	26	27	29	12'-10"	H1	37	26	28	29	12'-4"	H1	37	26	28	29	11'-10"	H1	37	26	28	29
Double 16 G Steel C	N9, N25, T	20'-0"	G	35	25	27	28	18'-11"	G	35	25	27	28	17'-11"	H1	36	26	27	29	17'-1"	H1	36	26	28	29	16'-4"	H1	37	26	28	29	15'-9"	H1	37	26	28	29	15'-2"	H1	38	27	28	30	14'-7"	H1	38	27	28	30	14'-1"	H1	38	27	29	30	13'-8"	H1	39	27	29	30
Double 14 G Steel C	N9, N25, T	23'-3"	H1	37	26	28	29	22'-0"	H1	37	26	28	29	20'-11"	H1	38	27	28	30	20'-0"	H1	38	27	29	30	19'-2"	H1	39	27	29	30	18'-6"	H1	39	28	29	31	17'-10"	H1	40	28	29	31	17'-3"	H2	40	28	30	31	16'-8"	H2	41	28	30	31	16'-2"	H2	41	28	30	31
Double 12 G Steel C	N9, N25, T	30'-11"	H2	40	28	30	31	29'-4"	H2	41	28	30	32	27'-11"	H2	42	29	30	32	26'-8"	H2	42	29	31	32	25'-8"	H3	43	29	31	33	24'-10"	H3	43	30	31	33	23'-11"	H3	44	30	32	33	23'-2"	H3	44	30	32	33	22'-5"	H3	45	30	32	34	21'-10"	H3	45	31	32	34
Steel Cloverleaf	W	6'-1"	A1	24	22	23	24	5'-8"	A2	24	23	24	25	5'-4"	A2	24	23	25	26	5'-0"	A2	24	24	25	26	4'-8"	A2	24	24	26	27	4'-6"	A2	25	25	26	27	4'-3"	A2	25	25	27	28	4'-1"	A2	25	26	27	28	3'-11"	A3	25	26	27	29	3'-9"	A3	25	26	28	29
DBL Steel Cloverleaf	AA	10'-8"	D	28	22	23	24	10'-1"	D	29	23	24	25	9'-7"	E	29	23	25	26	9'-2"	E	30	24	25	26	8'-10"	E	30	24	26	27	8'-6"	E	30	25	26	27	8'-3"	E	31	25	27	28	7'-11"	E	31	26	27	28	7'-8"	E	31	26	27	29	7'-6"	E	32	26	28	29
4x3 I Beam	Y	8'-3"	A3	26	22	23	24	7'-10"	A3	26	23	24	25	7'-5"	C	27	23	25	26	6'-11"	C	27	24	25	26	6'-6"	C	27	24	26	27	6'-2"	C	27	25	26	27	5'-10"	C	27	25	27	28	5'-6"	C	28	26	27	28	5'-3"	C	28	26	27	29	5'-0"	C	28	26	28	29
7x4 I Beam	Q	12'-5"	E	30	22	24	25	12'-1"	E	31	23	24	25	11'-9"	E	31	23	25	26	11'-0"	E	31	24	25	26	10'-4"	E	32	24	26	27	9'-9"	E	32	25	26	27	9'-3"	E	32	25	27	28	8'-9"	E	32	26	27	28	8'-4"	F	32	26	27	29	7'-11"	F	32	26	28	29

Ground Snow Load: 10 psf   Live Load: 10 psf   Wind Speed: 105 MPH EXPOSURE B   Seismic Ss= 150%   Seismic Design Category D   Freestanding Structures

Table 5.4b — cubic footing "d" Constrained Footing (in), Max Post Length 8' / 10' / 12'

Header	Detail	trib 3'	Min Post Type	Uplift Footing (in)	8'	10'	12'	trib 3.5'	Min Post Type	Uplift Footing (in)	8'	10'	12'	trib 4'	Min Post Type	Uplift Footing (in)	8'	10'	12'	trib 4.5'	Min Post Type	Uplift Footing (in)	8'	10'	12'	trib 5'	Min Post Type	Uplift Footing (in)	8'	10'	12'	trib 5.5'	Min Post Type	Uplift Footing (in)	8'	10'	12'	trib 6'	Min Post Type	Uplift Footing (in)	8'	10'	12'	trib 6.5'	Min Post Type	Uplift Footing (in)	8'	10'	12'	trib 7'	Min Post Type	Uplift Footing (in)	8'	10'	12'	trib 7.5'	Min Post Type	Uplift Footing (in)	8'	10'	12'	trib 8'	Min Post Type	Uplift Footing (in)	8'	10'	12'
On Slab	On Slab	n/a	A3					n/a	A3					n/a	A3					n/a	A3					n/a	A3					n/a	A3					n/a	A3					n/a	A3					n/a	A3					n/a	A3					n/a	A3				
0.042"x3"x8"	N30	12'-4"	A1	19	24	25	27	11'-3"	A1	19	23	25	26	10'-5"	A1	19	23	24	25	9'-8"	A1	20	23	24	25	9'-1"	A1	20	22	23	25	8'-7"	A1	20	22	23	24	8'-1"	A1	20	22	23	24	7'-8"	A1	21	21	23	24	7'-5"	A1	21	21	22	23	7'-1"	A1	21	21	22	23	6'-9"	A1	21	21	22	23
Double 3"x8"	N25	18'-0"	A1	21	26	28	29	16'-7"	A2	22	26	27	29	15'-5"	A2	22	25	27	28	14'-5"	A2	22	25	26	28	13'-8"	A3	23	25	26	27	12'-11"	A3	23	24	26	27	12'-4"	A3	23	24	25	27	11'-9"	A3	24	24	25	26	11'-4"	B	24	23	25	26	10'-11"	C	24	23	25	26	10'-6"	C	24	23	24	26
Double 2"x6.625"	N25	16'-0"	A1	20	24	26	27	14'-9"	A1	21	24	25	27	13'-9"	A1	21	23	25	26	12'-11"	A2	22	23	24	26	12'-2"	A2	22	23	24	25	11'-7"	A2	22	22	24	25	11'-0"	A2	23	22	24	25	10'-7"	A3	23	22	23	24	10'-3"	A3	23	22	23	24	9'-10"	A3	23	22	23	24	9'-6"	A3	24	21	23	24
5.5" Extruded Fascia	L	15'-6"	A1	20	23	24	26	14'-3"	A1	21	23	24	25	13'-2"	A1	21	22	23	25	12'-4"	A1	21	22	23	24	11'-8"	A2	22	21	23	24	11'-0"	A2	22	21	22	23	10'-6"	A2	22	21	22	23	10'-0"	A2	22	21	22	23	9'-8"	A3	23	20	22	23	9'-3"	A3	23	20	21	22	8'-11"	A3	23	20	22	23
California Fascia	N10, G	13'-8"	A1	19	21	23	24	12'-6"	A1	20	21	22	23	11'-7"	A1	20	21	22	23	10'-9"	A1	20	20	21	22	10'-2"	A1	21	20	21	22	9'-7"	A1	21	20	21	22	9'-1"	A1	21	19	20	21	8'-7"	A2	21	19	20	21	8'-4"	A2	22	20	21	22	7'-11"	A2	22	20	21	22	7'-8"	A2	22	20	22	23
Classic Fascia	H	22'-8"	A3	23	26	27	29	21'-0"	A3	23	25	27	28	19'-7"	A3	24	25	26	27	18'-6"	C	24	24	26	27	17'-6"	C	25	24	26	27	16'-9"	D	25	24	25	26	16'-0"	D	26	24	25	26	15'-4"	D	26	23	25	26	14'-11"	D	26	23	24	26	14'-5"	E	27	23	24	25	14'-0"	E	27	23	24	25
16 G Steel C	N9, T	21'-2"	A2	22	27	29	30	19'-1"	A3	23	27	28	30	17'-6"	A3	23	26	28	29	16'-1"	A3	23	26	27	28	15'-0"	A3	24	25	27	28	14'-0"	A3	24	25	26	27	13'-2"	B	24	24	26	27	12'-6"	C	24	24	25	27	12'-0"	C	24	24	25	26	11'-5"	C	25	23	25	26	10'-10"	C	25	23	25	26
14 G Steel C	N9, T	25'-3"	A3	24	29	30	32	22'-11"	B	24	28	30	31	21'-0"	C	24	27	29	30	19'-6"	C	25	27	28	30	18'-2"	C	25	26	28	29	17'-1"	D	25	26	28	29	16'-1"	D	26	26	27	28	15'-3"	D	26	25	27	28	14'-8"	D	26	25	27	28	13'-11"	D	26	25	26	27	13'-4"	E	26	24	26	27
12 G Steel C	N9, T	36'-5"	E	27	32	33	35	33'-3"	E	27	31	33	34	30'-9"	E	28	30	32	34	28'-8"	E	28	30	31	33	26'-10"	E	29	29	31	32	25'-4"	E	29	29	30	32	24'-0"	F	29	28	30	31	22'-10"	F	30	28	30	31	22'-1"	F	30	28	29	31	21'-2"	G	30	27	29	30	20'-3"	G	30	27	29	30
Double 16 G Steel C	N9, N25, T	35'-4"	E	26	31	33	35	32'-8"	E	27	31	32	34	30'-5"	E	28	30	32	33	28'-8"	E	28	30	31	33	27'-1"	E	29	29	31	32	25'-10"	F	29	29	31	32	24'-8"	F	29	29	30	32	23'-8"	F	30	28	30	31	22'-11"	G	30	28	30	31	22'-1"	G	31	28	29	31	21'-4"	G	31	28	29	31
Double 14 G Steel C	N9, N25, T	40'-0"	E	27	32	34	36	37'-6"	E	28	32	34	35	35'-0"	E	29	31	33	35	33'-0"	F	30	31	33	34	31'-3"	G	30	30	32	34	29'-9"	G	30	30	32	33	28'-6"	G	31	30	31	33	27'-4"	G	31	29	31	33	26'-7"	G	32	29	31	32	25'-7"	G	32	29	31	32	24'-9"	H1	32	29	30	32
Double 12 G Steel C	N9, N25, T	40'-0"	E	27	32	34	36	40'-0"	E	29	32	34	36	40'-0"	G	30	32	34	36	40'-0"	G	31	32	34	36	40'-0"	H1	33	32	34	36	39'-4"	H1	33	32	34	36	37'-8"	H1	34	32	34	35	36'-2"	H1	34	32	33	35	35'-2"	H1	35	31	33	35	33'-11"	H1	35	31	33	34	32'-10"	H1	36	31	33	34
Steel Cloverleaf	W	12'-1"	A1	18	19	20	21	11'-0"	A1	19	18	19	20	10'-2"	A1	19	18	19	20	9'-5"	A1	19	18	19	19	8'-10"	A1	20	18	19	20	8'-4"	A1	20	18	20	20	7'-10"	A1	20	19	20	21	7'-6"	A1	20	19	20	21	7'-2"	A1	21	20	21	22	6'-11"	A1	21	20	21	22	6'-7"	A1	21	20	22	23
DBL Steel Cloverleaf	AA	18'-5"	A1	21	21	22	23	17'-1"	A2	22	20	21	22	15'-11"	A2	22	20	21	22	15'-0"	A3	23	20	21	22	14'-3"	A3	23	20	21	22	13'-7"	A3	23	20	21	22	13'-0"	A3	24	20	21	23	12'-6"	C	24	21	22	23	12'-2"	C	25	21	22	23	11'-8"	C	25	21	22	23	11'-4"	C	25	21	22	23
4x3 I Beam	Y	12'-5"	A1	19	20	21	22	12'-0"	A1	19	20	21	22	11'-6"	A1	20	20	21	22	11'-3"	A1	21	20	21	22	11'-0"	A1	21	19	21	22	10'-6"	A2	22	19	20	21	10'-1"	A2	22	19	20	21	9'-8"	A2	22	19	20	21	9'-5"	A2	23	20	21	22	9'-1"	A3	23	20	21	22	8'-9"	A3	23	20	22	23
7x4 I Beam	Q	17'-7"	A1	21	25	27	28	17'-0"	A2	22	25	27	28	16'-4"	A2	22	25	26	28	15'-11"	A3	23	25	26	27	15'-6"	A3	24	25	26	27	15'-3"	C	24	24	26	27	14'-9"	C	25	24	26	27	14'-6"	D	25	24	26	27	14'-4"	D	26	24	25	27	14'-1"	D	26	24	25	27	13'-9"	E	27	24	25	26

Header	Detail	trib 9'	Min Post Type	Uplift Footing (in)	8'	10'	12'	trib 10'	Min Post Type	Uplift Footing (in)	8'	10'	12'	trib 11'	Min Post Type	Uplift Footing (in)	8'	10'	12'	trib 12'	Min Post Type	Uplift Footing (in)	8'	10'	12'	trib 13'	Min Post Type	Uplift Footing (in)	8'	10'	12'	trib 14'	Min Post Type	Uplift Footing (in)	8'	10'	12'	trib 15'	Min Post Type	Uplift Footing (in)	8'	10'	12'	trib 16'	Min Post Type	Uplift Footing (in)	8'	10'	12'	trib 17'	Min Post Type	Uplift Footing (in)	8'	10'	12'	trib 18'	Min Post Type	Uplift Footing (in)	8'	10'	12'
On Slab	On Slab	n/a	A3					n/a	A3					n/a	A3					n/a	A3					n/a	A3					n/a	A3					n/a	A3					n/a	A3					n/a	A3					n/a	A3				
0.042"x3"x8"	N30	6'-3"	A2	21	21	22	23	5'-9"	A2	22	22	23	24	5'-5"	A2	22	22	23	24	5'-1"	A2	22	23	24	25	4'-9"	A2	22	23	24	26	4'-6"	A2	22	23	25	26	4'-3"	A2	22	24	25	26	4'-1"	A2	22	24	26	27	3'-10"	A2	23	25	26	27	3'-8"	A3	23	25	26	28
Double 3"x8"	N25	9'-9"	C	25	23	24	25	9'-2"	D	25	22	24	25	8'-7"	D	25	22	23	24	8'-2"	D	26	23	24	25	7'-9"	D	26	23	24	26	7'-5"	D	26	23	25	26	7'-1"	E	26	24	25	26	6'-9"	E	27	24	26	27	6'-6"	E	27	25	26	27	6'-3"	E	27	25	26	28
Double 2"x6.625"	N25	8'-10"	B	24	21	22	23	8'-4"	C	24	22	23	24	7'-10"	C	25	22	23	24	7'-5"	C	25	23	24	25	7'-1"	D	25	23	24	26	6'-10"	D	26	23	25	26	6'-6"	D	26	24	25	26	6'-3"	D	26	24	26	27	6'-0"	D	26	25	26	27	5'-10"	D	26	25	26	28
5.5" Extruded Fascia	L	8'-4"	A3	23	21	22	23	7'-9"	A3	24	22	23	24	7'-4"	C	24	22	23	24	6'-11"	C	24	23	24	25	6'-7"	C	25	23	24	26	6'-4"	C	25	23	25	26	6'-0"	C	25	24	25	26	5'-9"	D	25	24	26	27	5'-7"	D	25	25	26	27	5'-4"	D	26	25	26	28
California Fascia	N10, G	7'-1"	A2	22	21	22	23	6'-7"	A2	23	22	23	24	6'-2"	A3	23	22	23	24	5'-10"	A3	23	23	24	25	5'-6"	A3	23	23	24	26	5'-3"	A3	23	23	25	26	5'-0"	A3	24	24	25	26	4'-9"	A3	24	24	26	27	4'-6"	A3	24	25	26	27	4'-4"	A3	24	25	26	28
Classic Fascia	H	13'-2"	E	27	23	24	25	12'-6"	E	28	23	24	25	11'-10"	E	28	23	25	26	11'-4"	E	29	23	25	26	10'-11"	F	29	24	25	26	10'-7"	F	29	24	25	27	10'-2"	F	30	24	26	27	9'-10"	G	30	24	26	27	9'-7"	G	30	25	26	27	9'-3"	G	31	25	26	28
16 G Steel C	N9, T	9'-11"	C	25	23	24	25	9'-1"	C	25	22	23	25	8'-3"	C	25	22	23	24	7'-6"	C	25	23	24	25	6'-11"	C	25	23	24	26	6'-6"	D	25	23	25	26	6'-1"	C	25	24	25	26	5'-8"	C	25	24	26	27	5'-4"	C	25	25	26	27	5'-0"	C	25	25	26	28
14 G Steel C	N9, T	12'-3"	E	27	24	25	27	11'-4"	E	27	23	25	26	10'-7"	E	27	23	24	26	9'-11"	E	27	23	24	25	9'-4"	E	28	23	24	26	8'-9"	E	28	23	25	26	8'-2"	E	28	24	25	26	7'-8"	E	28	24	26	27	7'-2"	E	28	25	26	27	6'-10"	E	28	25	26	28
12 G Steel C	N9, T	18'-9"	G	31	27	28	30	17'-6"	G	31	26	28	29	16'-6"	G	32	26	27	29	15'-7"	G	32	25	27	28	14'-9"	G	32	26	27	28	14'-1"	H1	32	26	27	29	13'-5"	H1	33	26	27	29	12'-10"	H1	33	26	28	29	12'-4"	H1	33	26	28	29	11'-10"	H1	33	26	28	29
Double 16 G Steel C	N9, N25, T	20'-0"	G	31	27	29	30	18'-11"	G	32	27	28	30	17'-11"	H1	32	26	28	29	17'-1"	H1	33	26	28	29	16'-4"	H1	33	26	28	29	15'-9"	H1	34	26	28	29	15'-2"	H1	34	27	28	30	14'-7"	H1	34	27	28	30	14'-1"	H1	35	27	29	30	13'-8"	H1	35	27	29	30
Double 14 G Steel C	N9, N25, T	23'-3"	H1	33	28	30	31	22'-0"	H1	34	28	29	31	20'-11"	H1	34	27	29	30	20'-0"	H1	35	27	29	30	19'-2"	H1	35	27	29	30	18'-6"	H1	36	28	29	31	17'-10"	H1	36	28	29	31	17'-3"	H2	36	28	30	31	16'-8"	H2	37	28	30	31	16'-2"	H2	37	28	30	31
Double 12 G Steel C	N9, N25, T	30'-11"	H2	36	30	32	34	29'-4"	H2	37	30	32	33	27'-11"	H2	38	29	31	33	26'-8"	H2	38	29	31	32	25'-8"	H3	39	29	31	33	24'-10"	H3	39	30	31	33	23'-11"	H3	40	30	32	33	23'-2"	H3	40	30	32	33	22'-5"	H3	40	30	32	34	21'-10"	H3	41	31	32	34
Steel Cloverleaf	W	6'-1"	A1	21	21	22	23	5'-8"	A2	21	22	23	24	5'-4"	A2	22	22	23	24	5'-0"	A2	22	23	24	25	4'-8"	A2	22	23	24	26	4'-6"	A2	22	23	25	26	4'-3"	A2	22	24	25	26	4'-1"	A2	22	24	26	27	3'-11"	A3	23	25	26	27	3'-9"	A3	23	25	26	28
DBL Steel Cloverleaf	AA	10'-8"	D	26	21	23	24	10'-1"	D	26	22	23	24	9'-7"	E	26	22	23	24	9'-2"	E	27	23	24	25	8'-10"	E	27	23	24	26	8'-6"	E	27	23	25	26	8'-3"	E	28	24	25	26	7'-11"	E	28	24	26	27	7'-8"	E	28	25	26	27	7'-6"	E	29	25	26	28
4x3 I Beam	Y	8'-3"	A3	23	21	22	23	7'-10"	A3	24	22	23	24	7'-5"	C	24	22	23	24	6'-11"	C	24	23	24	25	6'-6"	C	24	23	24	26	6'-2"	C	25	23	25	26	5'-10"	C	25	24	25	26	5'-6"	C	25	24	26	27	5'-3"	C	25	25	26	27	5'-0"	C	25	25	26	28
7x4 I Beam	Q	13'-5"	E	28	24	25	26	12'-7"	E	28	23	25	26	11'-9"	E	28	23	24	26	11'-0"	E	28	23	25	26	10'-4"	E	29	23	25	26	9'-9"	E	29	23	25	26	9'-3"	E	29	24	25	26	8'-9"	E	29	24	26	27	8'-4"	F	29	25	26	27	7'-11"	F	29	25	26	28

Amerimax Exterior Home Products
28921 US Hwy 74
Romoland, CA 92585

Carl Putnam, P. E.
3441 Ivylink Place
Lynchburg, VA 24503
carlputnam@comcast.net

Registered Professional Engineer — CERTIFICATE NO. 39702 — CARL PUTNAM — Date Signed — ARIZONA, U.S.A. — Expires 09/30/2024

SECTION 5.0 POST SPACING, POST TYPE AND FOOTING SIZE FOR SOLID COVERS

Roof Solidity: 100%

Ground Snow Load: 10 psf **Live Load: 10 psf** **Wind Speed: 110 MPH EXPOSURE C or 130 MPH EXPOSURE B** **Seismic Ss= 150%** **Seismic Design Category D** **Structures are Attached to Existing Building**

Table 5.5a

Header	Detail	3' trib	Min Post Type	Uplift Footing (in)	cubic footing "d" Constrained Footing (in) Max Post Length 8'	10'	12'	3.5' trib	Min Post Type	Uplift Footing (in)	cubic footing "d" Constrained Footing (in) Max Post Length 8'	10'	12'	4' trib	Min Post Type	Uplift Footing (in)	cubic footing "d" Constrained Footing (in) Max Post Length 8'	10'	12'	4.5' trib	Min Post Type	Uplift Footing (in)	cubic footing "d" Constrained Footing (in) Max Post Length 8'	10'	12'
On Slab	On Slab	22'-8"	A3					19'-5"	A3					17'-0"	A3					15'-1"	A3				
0.042"x3"x8"	N30	11'-0"	A1	23	19	20	21	10'-0"	A1	24	19	20	21	9'-3"	A1	24	20	21	22	8'-7"	A1	24	21	22	23
Double 3"x8"	N25	16'-3"	A1	26	19	20	21	14'-11"	A2	27	19	20	21	13'-10"	A2	27	20	21	22	12'-11"	A2	28	21	22	23
Double 2"x6.625"	N25	14'-6"	A1	25	19	20	21	13'-4"	A1	26	19	20	21	12'-4"	A1	26	20	21	22	11'-7"	A2	27	21	22	23
5.5" Extruded Fascia	L	13'-11"	A1	25	19	20	21	12'-9"	A1	25	19	20	21	11'-10"	A1	26	20	21	22	11'-0"	A1	26	21	22	23
California Fascia	N10, G	12'-3"	A1	24	19	20	21	11'-2"	A1	24	19	20	21	10'-3"	A1	25	20	21	22	9'-7"	A1	25	21	22	23
Classic Fascia	H	20'-7"	A3	28	19	20	21	19'-0"	A3	29	19	21	22	17'-9"	B	30	20	21	22	16'-9"	C	30	21	22	23
16 G Steel C	N9, T	18'-8"	A2	27	19	20	21	16'-9"	A2	28	19	20	21	15'-3"	A3	28	20	21	22	14'-0"	A3	29	21	22	23
14 G Steel C	N9, T	22'-5"	A3	29	20	21	22	20'-3"	B	30	20	21	22	18'-6"	C	30	20	21	22	17'-1"	C	31	21	22	23
12 G Steel C	N9, T	32'-7"	E	33	21	23	24	29'-8"	E	34	22	23	24	27'-3"	E	34	22	23	25	25'-4"	E	35	22	24	25
Double 16 G Steel C	N9, N25, T	32'-0"	E	33	21	23	24	29'-6"	E	34	22	23	24	27'-6"	E	34	22	23	25	25'-10"	E	35	22	24	25
Double 14 G Steel C	N9, N25, T	36'-10"	E	34	22	23	25	33'-11"	E	35	23	24	25	31'-8"	F	36	23	24	25	29'-9"	F	37	23	25	26
Double 12 G Steel C	N9, N25, T	40'-0"	E	35	23	24	25	40'-0"	G	37	24	25	26	40'-0"	G	39	24	26	27	39'-4"	H1	40	25	26	28
Steel Cloverleaf	W	10'-10"	A1	23	19	20	21	9'-9"	A1	23	19	20	21	9'-0"	A1	24	20	21	22	8'-4"	A1	24	21	22	23
DBL Steel Cloverleaf	AA	16'-9"	A2	26	19	20	21	15'-6"	A2	27	19	20	21	14'-5"	A2	28	20	21	22	13'-7"	A3	28	21	22	23
4x3 I Beam	Y	10'-4"	A1	23	19	20	21	9'-11"	A1	23	19	20	21	9'-7"	A1	24	20	21	22	9'-4"	A1	25	21	22	23
7x4 I Beam	Q	14'-8"	A1	25	19	20	21	14'-1"	A1	26	19	20	21	13'-7"	A2	27	20	21	22	13'-2"	A3	28	21	22	23

Header	Detail	5' trib	Min Post Type	Uplift Footing (in)	cubic footing "d" Constrained Footing (in) Max Post Length 8'	10'	12'	5.5' trib	Min Post Type	Uplift Footing (in)	cubic footing "d" Constrained Footing (in) Max Post Length 8'	10'	12'	6' trib	Min Post Type	Uplift Footing (in)	cubic footing "d" Constrained Footing (in) Max Post Length 8'	10'	12'	6.5' trib	Min Post Type	Uplift Footing (in)	cubic footing "d" Constrained Footing (in) Max Post Length 8'	10'	12'
On Slab	On Slab	13'-7"	A3					12'-4"	A3					11'-4"	A3					10'-5"	A1				
0.042"x3"x8"	N30	8'-0"	A1	25	21	22	24	7'-7"	A1	25	22	23	24	7'-2"	A1	25	22	24	25	6'-9"	A1	25	23	24	25
Double 3"x8"	N25	12'-2"	A3	28	21	22	24	11'-7"	A3	29	22	23	24	11'-0"	A3	29	22	24	25	10'-6"	A3	29	23	24	25
Double 2"x6.625"	N25	10'-11"	A2	27	21	22	24	10'-5"	A2	28	22	23	24	9'-11"	A3	28	22	24	25	9'-6"	A3	28	23	24	25
5.5" Extruded Fascia	L	10'-4"	A2	27	21	22	24	9'-11"	A2	27	22	23	24	9'-4"	A2	28	22	24	25	8'-11"	A2	28	23	24	25
California Fascia	N10, G	9'-11"	A1	25	21	22	24	8'-6"	A1	26	22	23	24	8'-0"	A1	26	22	24	25	7'-8"	A1	26	23	24	25
Classic Fascia	H	15'-10"	C	31	21	22	24	15'-3"	D	31	22	23	24	14'-7"	D	32	22	24	25	14'-0"	D	32	23	24	25
16 G Steel C	N9, T	13'-0"	A3	29	21	22	24	12'-4"	A3	29	22	23	24	11'-6"	A3	29	22	24	25	10'-10"	B	30	23	24	25
14 G Steel C	N9, T	15'-10"	C	31	21	22	24	15'-0"	D	31	22	23	24	14'-1"	D	32	22	24	25	13'-4"	D	32	23	24	25
12 G Steel C	N9, T	23'-9"	E	35	23	24	25	22'-7"	E	36	23	24	25	21'-4"	F	36	23	24	26	20'-3"	F	37	23	25	26
Double 16 G Steel C	N9, N25, T	24'-5"	E	36	23	24	26	23'-5"	F	36	23	24	26	22'-4"	F	37	23	25	26	21'-4"	F	37	24	25	26
Double 14 G Steel C	N9, N25, T	28'-2"	G	37	24	25	26	27'-1"	G	38	24	25	27	25'-10"	G	39	24	26	27	24'-9"	G	39	24	26	27
Double 12 G Steel C	N9, N25, T	37'-3"	H1	41	25	27	28	35'-10"	H1	42	26	27	29	34'-3"	H1	42	26	28	29	32'-10"	H1	43	26	28	29
Steel Cloverleaf	W	7'-9"	A1	22	21	22	24	7'-5"	A1	25	22	23	24	6'-11"	A1	25	22	24	25	6'-7"	A1	25	23	24	25
DBL Steel Cloverleaf	AA	12'-10"	A3	29	21	22	24	12'-4"	A3	29	22	23	24	11'-10"	B	30	22	24	25	11'-4"	C	30	23	24	25
4x3 I Beam	Y	9'-1"	A1	26	21	22	24	8'-11"	A1	26	22	23	24	8'-8"	A2	27	22	24	25	8'-6"	A2	27	23	24	25
7x4 I Beam	Q	12'-10"	A3	29	21	22	24	12'-7"	A3	29	22	23	24	12'-4"	C	30	22	24	25	12'-1"	C	31	23	24	25

Header	Detail	7' trib	Min Post Type	Uplift Footing (in)	cubic footing "d" Constrained Footing (in) Max Post Length 8'	10'	12'	7.5' trib	Min Post Type	Uplift Footing (in)	cubic footing "d" Constrained Footing (in) Max Post Length 8'	10'	12'	8' trib	Min Post Type	Uplift Footing (in)	cubic footing "d" Constrained Footing (in) Max Post Length 8'	10'	12'
On Slab	On Slab	9'-8"	A3					9'-1"	A3					8'-6"	A3				
0.042"x3"x8"	N30	6'-5"	A1	26	23	24	26	6'-1"	A1	26	24	25	26	5'-11"	A1	26	24	25	27
Double 3"x8"	N25	10'-0"	A3	30	23	24	26	9'-7"	C	30	24	25	26	9'-4"	C	30	24	25	27
Double 2"x6.625"	N25	9'-1"	A3	29	23	24	26	8'-8"	A3	29	24	25	26	8'-5"	A3	29	24	25	27
5.5" Extruded Fascia	L	8'-6"	A3	28	23	24	26	8'-2"	A3	28	24	25	26	7'-11"	A3	29	24	25	27
California Fascia	N10, G	7'-3"	A2	27	23	24	26	6'-11"	A2	27	24	25	26	6'-8"	A2	27	24	25	27
Classic Fascia	H	13'-5"	D	33	23	24	26	13'-0"	E	33	24	25	26	12'-8"	E	33	24	25	27
16 G Steel C	N9, T	10'-3"	B	30	23	24	26	9'-9"	C	30	24	25	26	9'-4"	C	30	24	25	27
14 G Steel C	N9, T	12'-8"	D	32	23	24	26	12'-0"	D	32	24	25	26	11'-7"	D	32	24	25	27
12 G Steel C	N9, T	19'-4"	F	37	23	25	26	18'-5"	F	37	24	25	26	17'-10"	G	38	24	25	27
Double 16 G Steel C	N9, T	20'-6"	G	38	24	25	26	19'-9"	G	38	24	25	27	19'-2"	G	38	24	26	27
Double 14 G Steel C	N9, T	23'-10"	G	39	25	26	27	22'-11"	G	40	25	26	28	22'-4"	H1	40	25	27	28
Double 12 G Steel C	N9, T	31'-7"	H1	43	26	28	29	30'-6"	H1	44	27	28	30	29'-8"	H1	44	27	29	30
Steel Cloverleaf	W	6'-3"	A1	25	23	24	25	6'-0"	A1	26	24	25	26	5'-9"	A1	26	24	25	27
DBL Steel Cloverleaf	AA	10'-11"	C	30	23	24	26	10'-6"	C	31	24	25	26	10'-3"	D	31	24	25	27
4x3 I Beam	Y	8'-4"	A2	28	23	24	26	8'-3"	A3	28	24	25	26	8'-1"	A3	29	24	25	27
7x4 I Beam	Q	11'-10"	D	31	23	24	26	11'-8"	D	32	24	25	26	11'-6"	D	32	24	25	27

Ground Snow Load: 10 psf **Live Load: 10 psf** **Wind Speed: 110 MPH EXPOSURE C or 130 MPH EXPOSURE B** **Seismic Ss= 150%** **Seismic Design Category D** **Freestanding Structures**

Table 5.5b

Header	Detail	3' trib	Min Post Type	Uplift Footing (in)	cubic footing "d" Constrained Footing (in) Max Post Length 8'	10'	12'	3.5' trib	Min Post Type	Uplift Footing (in)	cubic footing "d" Constrained Footing (in) Max Post Length 8'	10'	12'	4' trib	Min Post Type	Uplift Footing (in)	cubic footing "d" Constrained Footing (in) Max Post Length 8'	10'	12'	4.5' trib	Min Post Type	Uplift Footing (in)	cubic footing "d" Constrained Footing (in) Max Post Length 8'	10'	12'
On Slab	On Slab	n/a	C					n/a	C					n/a	C					n/a	C				
0.042"x3"x8"	N30	11'-0"	A1	20	26	28	29	10'-2"	A1	21	26	27	29	9'-4"	A1	21	25	27	28	8'-8"	A1	21	25	26	28
Double 3"x8"	N25	16'-3"	A2	23	29	31	32	15'-2"	A2	24	29	30	32	14'-0"	A3	24	28	30	31	13'-1"	A3	25	28	29	31
Double 2"x6.625"	N25	14'-6"	A1	22	27	29	30	13'-6"	A2	23	27	28	29	12'-6"	A2	23	26	28	29	11'-9"	A2	24	26	27	28
5.5" Extruded Fascia	L	13'-11"	A1	22	25	27	28	13'-0"	A1	23	25	26	28	12'-0"	A2	23	25	26	27	11'-2"	A2	23	24	25	27
California Fascia	N10, G	12'-3"	A1	21	24	25	26	11'-4"	A1	22	23	25	26	10'-5"	A1	22	23	24	25	9'-8"	A1	22	22	24	25
Classic Fascia	H	20'-7"	A3	25	28	30	32	19'-4"	C	26	28	30	31	18'-0"	C	26	27	29	30	16'-11"	C	27	27	29	30
16 G Steel C	N9, T	18'-8"	A3	24	30	32	33	17'-1"	A3	25	30	31	33	15'-6"	A3	25	29	30	32	14'-3"	A3	25	28	30	31
14 G Steel C	N9, T	22'-5"	B	26	32	33	35	20'-7"	C	26	31	33	34	18'-10"	C	27	30	32	34	17'-4"	D	27	30	31	33
12 G Steel C	N9, T	32'-7"	E	29	35	37	39	30'-2"	E	30	34	36	38	27'-9"	E	30	33	35	37	25'-9"	E	31	33	35	36
Double 16 G Steel C	N9, N25, T	32'-0"	E	29	35	37	38	30'-0"	E	30	34	36	38	27'-10"	E	30	33	35	37	26'-1"	E	31	33	35	36
Double 14 G Steel C	N9, N25, T	36'-10"	E	30	36	38	40	34'-6"	F	31	35	37	39	32'-1"	F	32	35	37	38	30'-1"	G	32	34	36	38
Double 12 G Steel C	N9, N25, T	40'-0"	F	31	37	39	41	40'-0"	G	33	37	39	41	40'-0"	G	34	37	39	41	39'-9"	H1	36	37	39	41
Steel Cloverleaf	W	10'-10"	A1	20	20	22	23	10'-0"	A1	21	20	21	22	9'-2"	A1	21	20	21	22	8'-5"	A1	21	20	21	22
DBL Steel Cloverleaf	AA	16'-9"	A2	23	23	24	25	15'-8"	A2	24	23	24	25	14'-7"	A3	25	22	23	25	13'-9"	A3	25	22	23	24
4x3 I Beam	Y	11'-4"	A1	20	22	24	25	11'-0"	A1	21	22	23	25	10'-7"	A1	22	22	23	24	10'-3"	A1	23	22	23	24
7x4 I Beam	Q	16'-1"	A2	23	28	30	31	15'-6"	A2	24	28	29	31	14'-11"	A3	25	28	29	31	14'-6"	A3	25	27	29	30

Header	Detail	5' trib	Min Post Type	Uplift Footing (in)	cubic footing "d" Constrained Footing (in) Max Post Length 8'	10'	12'	5.5' trib	Min Post Type	Uplift Footing (in)	cubic footing "d" Constrained Footing (in) Max Post Length 8'	10'	12'	6' trib	Min Post Type	Uplift Footing (in)	cubic footing "d" Constrained Footing (in) Max Post Length 8'	10'	12'	6.5' trib	Min Post Type	Uplift Footing (in)	cubic footing "d" Constrained Footing (in) Max Post Length 8'	10'	12'
On Slab	On Slab	n/a	C					n/a	C					n/a	C					n/a	C				
0.042"x3"x8"	N30	8'-2"	A1	22	24	26	27	7'-8"	A1	22	24	26	27	7'-3"	A1	22	24	25	26	6'-10"	A1	22	23	25	26
Double 3"x8"	N25	12'-5"	A3	25	27	29	30	11'-9"	A3	25	27	28	30	11'-2"	B	26	26	28	29	10'-7"	C	26	26	28	29
Double 2"x6.625"	N25	11'-2"	A3	24	25	27	28	10'-7"	A3	24	25	26	28	10'-0"	A3	25	25	26	27	9'-7"	A3	25	24	26	27
5.5" Extruded Fascia	L	10'-7"	A2	24	24	25	26	10'-0"	A2	24	23	25	26	9'-6"	A3	24	23	24	26	9'-0"	A3	25	23	24	25
California Fascia	N10, G	9'-2"	A1	23	22	23	24	8'-7"	A2	23	22	23	24	8'-2"	A2	23	21	23	24	7'-8"	A2	23	22	23	24
Classic Fascia	H	16'-2"	D	27	27	28	30	15'-4"	D	28	26	28	29	14'-8"	D	28	26	28	29	14'-1"	E	28	26	27	29
16 G Steel C	N9, T	13'-5"	B	26	28	29	31	12'-6"	C	26	27	29	30	11'-8"	C	26	27	28	30	11'-0"	C	26	26	28	29
14 G Steel C	N9, T	16'-4"	D	27	29	31	32	15'-3"	D	28	29	30	32	14'-3"	D	28	28	30	31	13'-6"	D	28	28	29	31
12 G Steel C	N9, T	24'-4"	F	31	32	34	36	22'-10"	F	32	32	34	35	21'-7"	F	32	31	33	35	20'-6"	G	32	31	33	34
Double 16 G Steel C	N9, T	24'-11"	F	32	32	34	36	23'-8"	G	32	32	34	36	22'-6"	G	32	32	34	35	21'-6"	G	33	31	33	34
Double 14 G Steel C	N9, T	28'-9"	G	33	34	36	37	27'-4"	G	34	33	35	37	26'-1"	G	34	33	35	36	25'-0"	G	34	32	34	36
Double 12 G Steel C	N9, T	38'-1"	H1	36	36	38	40	36'-2"	H1	37	36	38	40	34'-6"	H1	37	35	37	39	33'-1"	H1	38	35	37	39
Steel Cloverleaf	W	8'-0"	A1	22	20	22	23	7'-6"	A1	22	21	22	23	7'-0"	A1	22	21	23	24	6'-8"	A1	22	22	23	24
DBL Steel Cloverleaf	AA	13'-2"	A3	25	22	23	24	12'-6"	C	26	21	23	24	11'-11"	C	26	21	23	24	11'-5"	C	27	22	23	24
4x3 I Beam	Y	10'-0"	A2	23	22	23	24	9'-8"	A2	24	21	23	24	9'-3"	A2	24	21	23	24	8'-10"	A3	24	22	23	24
7x4 I Beam	Q	14'-2"	C	26	27	29	30	13'-9"	C	27	27	29	30	13'-6"	D	27	27	28	30	13'-3"	D	28	27	28	30

Header	Detail	7' trib	Min Post Type	Uplift Footing (in)	cubic footing "d" Constrained Footing (in) Max Post Length 8'	10'	12'	7.5' trib	Min Post Type	Uplift Footing (in)	cubic footing "d" Constrained Footing (in) Max Post Length 8'	10'	12'	8' trib	Min Post Type	Uplift Footing (in)	cubic footing "d" Constrained Footing (in) Max Post Length 8'	10'	12'
On Slab	On Slab	n/a	C					n/a	C					n/a	C				
0.042"x3"x8"	N30	6'-7"	A1	23	23	25	26	6'-3"	A2	23	23	24	25	5'-11"	A2	23	23	24	26
Double 3"x8"	N25	10'-2"	C	26	26	27	29	9'-9"	C	26	26	27	28	9'-4"	C	27	25	27	28
Double 2"x6.625"	N25	9'-3"	A3	25	24	25	27	8'-10"	B	26	24	25	26	8'-6"	C	26	24	25	26
5.5" Extruded Fascia	L	8'-8"	A3	25	23	24	25	8'-4"	A3	25	23	24	25	8'-0"	A3	25	23	24	26
California Fascia	N10, G	7'-5"	A2	24	22	24	25	7'-1"	A2	24	23	24	25	6'-9"	A2	24	23	24	26
Classic Fascia	H	13'-8"	E	29	26	27	28	13'-2"	E	29	25	27	28	12'-8"	E	29	25	27	28
16 G Steel C	N9, T	10'-6"	C	26	26	28	29	9'-11"	C	27	26	27	29	9'-5"	C	27	25	27	28
14 G Steel C	N9, T	12'-11"	E	28	27	29	30	12'-3"	E	29	27	29	30	11'-8"	E	29	27	28	30
12 G Steel C	N9, T	19'-8"	G	33	31	32	34	18'-9"	G	33	30	32	34	18'-0"	G	33	30	32	33
Double 16 G Steel C	N9, T	20'-10"	G	33	31	33	34	20'-0"	G	34	31	33	34	19'-4"	G	34	30	32	34
Double 14 G Steel C	N9, T	24'-2"	H1	35	32	34	36	23'-3"	H1	35	32	34	35	22'-6"	H1	36	32	33	35
Double 12 G Steel C	N9, T	32'-1"	H1	38	35	37	38	30'-11"	H2	39	34	36	38	29'-11"	H2	39	34	36	38
Steel Cloverleaf	W	6'-1"	A1	23	23	24	25	5'-10"	A2	23	23	24	26	5'-10"	A2	23	23	24	26
DBL Steel Cloverleaf	AA	11'-1"	D	27	22	24	25	10'-8"	D	27	23	24	25	10'-4"	D	27	23	24	26
4x3 I Beam	Y	8'-7"	A3	25	22	24	25	8'-3"	A3	25	23	24	25	8'-0"	A3	25	23	24	26
7x4 I Beam	Q	13'-1"	E	28	27	28	30	12'-9"	E	29	27	28	29	12'-7"	E	29	26	28	29

Amerimax Exterior Home Products
28921 US Hwy 74
Romoland, CA 92585

Carl Putnam, P. E.
3441 Ivylink Place
Lynchburg, VA 24503
carlputnam@comcast.net

Registered Professional Engineer (Civil) CERTIFICATE NO. 39702 CARL PUTNAM Date Signed ARIZONA U.S.A. Expires 09/30/2024

JAN 20 2023

SECTION 5.0 POST SPACING, POST TYPE AND FOOTING SIZE FOR SOLID COVERS

Roof Solidity: 100%

Ground Snow Load: 10 psf **Live Load: 10 psf** **Wind Speed: 115 MPH EXPOSURE C or 130 MPH EXPOSURE B** **Seismic Ss= 150%** **Seismic Design Category D** **Structures are Attached to Existing Building**

Table 5.6a (cubic footing "d")

Header	Detail	trib 3'	Min Post Type	Uplift Footing (in)	Constrained Footing (in) Max Post Length 8'	10'	12'	trib 3.5'	Min Post Type	Uplift Footing (in)	8'	10'	12'	trib 4'	Min Post Type	Uplift Footing (in)	8'	10'	12'	trib 4.5'	Min Post Type	Uplift Footing (in)	8'	10'	12'	trib 5'	Min Post Type	Uplift Footing (in)	8'	10'	12'
On Slab	On Slab	22'-8"	B					19'-5"	B					17'-0"	B					15'-1"	B					13'-7"	B				
0.042"x3"x8"	N30	10'-5"	A1	23	19	20	21	9'-6"	A1	24	20	21	22	8'-8"	A1	24	20	22	23	8'-1"	A1	25	21	22	23	7'-7"	A1	25	22	23	24
Double 3"x8"	N25	15'-5"	A1	27	19	20	21	14'-3"	A2	27	20	21	22	13'-1"	A2	28	20	22	23	12'-4"	A2	28	21	22	23	11'-7"	A3	29	22	23	24
Double 2"x6.625"	N25	13'-9"	A1	26	19	20	21	12'-8"	A1	26	20	21	22	11'-9"	A1	27	20	22	23	11'-0"	A2	27	21	22	23	10'-5"	A2	28	22	23	24
5.5" Extruded Fascia	L	13'-2"	A1	25	19	20	21	12'-2"	A1	26	20	21	22	11'-2"	A1	26	20	22	23	10'-6"	A1	27	21	22	23	9'-11"	A2	27	22	23	24
California Fascia	N10, G	11'-7"	A1	24	19	20	21	10'-7"	A1	25	20	21	22	9'-8"	A1	25	20	22	23	9'-1"	A1	25	21	22	23	8'-6"	A1	26	22	23	24
Classic Fascia	H	19'-7"	A3	29	19	20	21	18'-3"	A3	30	20	21	22	16'-11"	B	30	20	22	23	16'-0"	C	31	21	22	23	15'-3"	C	31	22	23	24
16 G Steel C	N9, T	17'-6"	A2	28	19	20	21	15'-10"	A2	28	20	21	22	14'-3"	A3	28	20	22	23	13'-2"	A3	29	21	22	23	12'-4"	A3	29	22	23	24
14 G Steel C	N9, T	21'-0"	A3	29	19	20	21	19'-2"	A3	30	20	21	22	17'-4"	C	30	20	22	23	16'-1"	C	31	21	22	23	15'-0"	C	31	22	23	24
12 G Steel C	N9, T	30'-9"	E	33	21	22	23	28'-2"	E	34	22	23	24	25'-9"	E	35	22	23	24	24'-0"	E	35	22	23	24	22'-7"	E	36	22	24	25
Double 16 G Steel C	N9, N25, T	30'-5"	E	33	21	22	23	28'-3"	E	34	22	23	24	26'-1"	E	35	22	23	24	24'-8"	E	36	22	24	25	23'-5"	E	36	23	24	25
Double 14 G Steel C	N9, N25, T	35'-0"	E	35	22	23	24	32'-6"	E	36	22	24	25	30'-1"	E	37	23	24	25	28'-6"	F	37	23	24	26	27'-1"	G	38	23	25	26
Double 12 G Steel C	N9, N25, T	40'-0"	E	36	23	24	25	40'-0"	G	38	24	25	26	39'-9"	G	40	24	26	27	37'-8"	H1	41	25	26	27	35'-10"	H1	42	25	27	28
Steel Cloverleaf	W	10'-2"	A1	23	19	20	21	9'-3"	A1	24	20	21	22	8'-5"	A1	24	20	22	23	7'-10"	A1	24	21	22	23	7'-5"	A1	25	22	23	24
DBL Steel Cloverleaf	AA	15'-11"	A2	27	19	20	21	14'-10"	A2	28	20	21	22	13'-9"	A2	28	20	22	23	13'-0"	A3	29	21	22	23	12'-4"	A3	29	22	23	24
4x3 I Beam	Y	10'-1"	A1	23	19	20	21	9'-9"	A1	24	20	21	22	9'-5"	A1	25	20	22	23	9'-2"	A1	26	21	22	23	8'-11"	A1	26	22	23	24
7x4 I Beam	Q	14'-4"	A1	26	19	20	21	13'-9"	A2	27	20	21	22	13'-3"	A2	28	20	22	23	12'-11"	A3	29	21	22	23	12'-7"	A3	29	22	23	24

Header	Detail	trib 5.5'	Min Post Type	Uplift Footing (in)	Constrained Footing (in) Max Post Length 8'	10'	12'	trib 6'	Min Post Type	Uplift Footing (in)	8'	10'	12'	trib 6.5'	Min Post Type	Uplift Footing (in)	8'	10'	12'	trib 7'	Min Post Type	Uplift Footing (in)	8'	10'	12'	trib 7.5'	Min Post Type	Uplift Footing (in)	8'	10'	12'	trib 8'	Min Post Type	Uplift Footing (in)	8'	10'	12'
On Slab	On Slab	12'-4"	B					11'-4"	B					10'-5"	A1					9'-8"	B					9'-1"	B					8'-6"	B				
0.042"x3"x8"	N30	7'-2"	A1	25	22	24	25	6'-8"	A1	25	23	24	25	6'-4"	A1	26	23	25	26	6'-1"	A1	26	24	25	26	5'-9"	A1	26	24	25	27	5'-6"	A1	26	24	26	27
Double 3"x8"	N25	11'-0"	A3	29	22	24	25	10'-5"	A3	29	23	24	25	9'-11"	A3	30	23	25	26	9'-6"	A3	30	24	25	26	9'-2"	B	30	24	25	27	8'-9"	C	31	24	26	27
Double 2"x6.625"	N25	9'-11"	A2	28	22	24	25	9'-5"	A2	28	23	24	25	9'-0"	A3	29	23	25	26	8'-8"	A3	29	24	25	26	8'-4"	A3	29	24	25	27	8'-0"	A3	30	24	26	27
5.5" Extruded Fascia	L	9'-4"	A2	28	22	24	25	8'-10"	A2	28	23	24	25	8'-5"	A2	28	23	25	26	8'-1"	A3	28	24	25	26	7'-9"	A3	29	24	25	27	7'-5"	A3	29	24	26	27
California Fascia	N10, G	8'-0"	A1	26	22	24	25	7'-7"	A1	26	23	24	25	7'-2"	A1	27	23	25	26	6'-10"	A2	27	24	25	26	6'-7"	A2	27	24	25	27	6'-3"	A2	27	24	26	27
Classic Fascia	H	14'-7"	D	32	22	24	25	13'-10"	D	32	23	24	25	13'-4"	D	33	23	25	26	12'-11"	D	33	24	25	26	12'-6"	E	34	24	25	27	12'-0"	E	34	24	26	27
16 G Steel C	N9, T	11'-6"	A3	30	22	24	25	10'-9"	A3	30	23	24	25	10'-2"	A3	30	23	25	26	9'-8"	B	30	24	25	26	9'-1"	B	30	24	25	27	8'-5"	B	30	24	26	27
14 G Steel C	N9, T	14'-1"	C	32	22	24	25	13'-2"	D	32	23	24	25	12'-6"	D	32	23	25	26	11'-11"	D	32	24	25	26	11'-4"	D	33	24	25	27	10'-9"	D	33	24	26	27
12 G Steel C	N9, T	21'-4"	E	36	23	24	25	20'-1"	F	37	23	24	25	19'-2"	F	37	23	25	26	18'-4"	F	37	24	25	26	17'-6"	F	38	24	25	27	16'-9"	G	38	24	26	27
Double 16 G Steel C	N9, N25, T	22'-4"	F	37	23	24	25	21'-2"	F	37	23	24	25	20'-4"	F	38	23	25	26	19'-7"	G	38	24	25	26	18'-11"	G	39	24	25	27	18'-2"	G	39	24	26	27
Double 14 G Steel C	N9, N25, T	25'-10"	G	39	24	25	26	24'-7"	G	39	24	25	26	23'-7"	G	40	24	26	27	22'-9"	G	40	24	26	27	22'-0"	G	41	25	26	27	21'-2"	H1	41	25	26	27
Double 12 G Steel C	N9, N25, T	34'-3"	H1	42	25	27	28	32'-7"	H1	43	26	27	28	31'-4"	H1	44	26	27	29	30'-3"	H1	44	26	28	29	29'-4"	H1	45	26	28	29	28'-3"	H1	45	27	28	30
Steel Cloverleaf	W	6'-11"	A1	25	22	24	25	6'-6"	A1	25	23	24	25	6'-2"	A1	25	23	25	26	5'-11"	A1	26	24	25	26	5'-8"	A1	26	24	25	27	5'-5"	A1	26	24	26	27
DBL Steel Cloverleaf	AA	11'-10"	A3	30	22	24	25	11'-3"	B	30	23	24	25	10'-10"	C	31	23	25	26	10'-5"	C	31	24	25	26	10'-1"	C	31	24	25	27	9'-9"	D	32	24	26	27
4x3 I Beam	Y	8'-8"	A2	27	22	24	25	8'-6"	A2	27	23	24	25	8'-4"	A2	28	23	25	26	8'-2"	A3	29	24	25	26	7'-11"	A3	29	24	25	27	7'-6"	A3	29	24	26	27
7x4 I Beam	Q	12'-4"	B	30	22	24	25	12'-0"	C	31	23	24	25	11'-9"	C	31	23	25	26	11'-7"	D	32	24	25	26	11'-5"	D	33	24	25	27	11'-2"	D	33	24	26	27

Header	Detail	trib 8.5'	Min Post Type	Uplift Footing (in)	Footing (in) Max Post Length 8'	10'	12'	trib 9'	Min Post Type	Uplift Footing (in)	8'	10'	12'	trib 10'	Min Post Type	Uplift Footing (in)	8'	10'	12'	trib 11'	Min Post Type	Uplift Footing (in)	8'	10'	12'	trib 12'	Min Post Type	Uplift Footing (in)	8'	10'	12'
On Slab	On Slab	8'-0"	B					7'-6"	B					6'-9"	B					6'-2"	B					5'-8"	B				
0.042"x3"x8"	N30	5'-3"	A1	26	25	26	28	5'-1"	A1	26	25	27	28	4'-8"	A1	27	26	27	29	4'-4"	A2	27	27	28	29	4'-0"	A2	27	27	29	30
Double 3"x8"	N25	8'-5"	C	31	25	26	28	8'-2"	C	31	25	27	28	7'-7"	C	31	26	27	29	7'-2"	D	32	27	28	29	6'-9"	D	32	27	29	30
Double 2"x6.625"	N25	7'-8"	A3	30	25	26	28	7'-5"	A3	30	25	27	28	7'-0"	C	31	26	27	29	6'-7"	C	31	27	28	29	6'-3"	C	31	27	29	30
5.5" Extruded Fascia	L	7'-2"	A3	29	25	26	28	6'-11"	A3	29	25	27	28	6'-6"	A3	30	26	27	29	6'-1"	B	30	27	28	29	5'-9"	C	30	27	29	30
California Fascia	N10, G	6'-0"	A2	28	25	26	28	5'-10"	A2	28	25	27	28	5'-4"	A2	28	26	27	29	5'-0"	A2	28	27	28	29	4'-9"	A3	28	27	29	30
Classic Fascia	H	11'-8"	E	34	25	26	28	11'-4"	E	35	25	27	28	10'-9"	E	35	26	27	29	10'-3"	E	36	27	28	29	9'-10"	E	36	27	29	30
16 G Steel C	N9, T	7'-11"	B	30	25	26	28	7'-6"	B	30	25	27	28	6'-9"	B	30	26	27	29	6'-2"	B	30	27	28	29	5'-7"	B	30	27	29	30
14 G Steel C	N9, T	10'-4"	D	33	25	26	28	9'-11"	D	33	25	27	28	9'-1"	E	33	26	27	29	8'-4"	E	33	27	28	29	7'-7"	E	33	27	29	30
12 G Steel C	N9, T	16'-1"	G	38	25	26	28	15'-7"	G	38	25	27	28	14'-5"	G	39	26	27	29	13'-7"	G	39	27	28	29	12'-9"	G	40	27	29	30
Double 16 G Steel C	N9, N25, T	17'-7"	G	39	25	26	28	17'-1"	G	40	25	27	28	16'-1"	G	40	26	27	29	15'-4"	H1	41	27	28	29	14'-6"	H1	41	27	29	30
Double 14 G Steel C	N9, N25, T	20'-7"	H1	41	25	26	28	20'-0"	H1	42	25	27	28	18'-11"	H1	42	26	27	29	18'-0"	H1	43	27	28	29	17'-2"	H1	44	27	29	30
Double 12 G Steel C	N9, N25, T	27'-5"	H2	46	27	28	30	26'-8"	H2	46	27	29	30	25'-3"	H2	47	27	29	30	24'-2"	H2	48	28	29	31	23'-1"	H2	48	28	30	31
Steel Cloverleaf	W	5'-2"	A1	26	25	26	28	5'-0"	A1	26	25	27	28	4'-7"	A1	27	26	27	29	4'-4"	A2	27	27	28	29	4'-1"	A2	27	27	29	30
DBL Steel Cloverleaf	AA	9'-5"	D	32	25	26	28	9'-2"	D	32	25	27	28	8'-8"	D	33	26	27	29	8'-4"	E	33	27	28	29	7'-11"	E	34	27	29	30
4x3 I Beam	Y	7'-2"	A3	29	25	26	28	6'-11"	A3	29	25	27	28	6'-4"	A3	30	26	27	29	5'-11"	A3	30	27	28	29	5'-6"	A3	30	27	29	30
7x4 I Beam	Q	11'-0"	E	34	25	26	28	10'-11"	E	34	25	27	28	10'-1"	E	34	26	27	29	9'-5"	E	35	27	28	29	8'-9"	E	35	27	29	30

Header	Detail	trib 13'	Min Post Type	Uplift Footing (in)	Footing (in) Max Post Length 8'	10'	12'	trib 14'	Min Post Type	Uplift Footing (in)	8'	10'	12'	trib 15'	Min Post Type	Uplift Footing (in)	8'	10'	12'	trib 16'	Min Post Type	Uplift Footing (in)	8'	10'	12'	trib 17'	Min Post Type	Uplift Footing (in)	8'	10'	12'
On Slab	On Slab	5'-2"	B					4'-10"	B					4'-6"	B					4'-3"	B					4'-0"	B				
0.042"x3"x8"	N30	3'-9"	A2	27	28	29	31	3'-7"	A2	27	28	30	31	3'-4"	A2	27	29	30	32	3'-2"	A2	28	29	31	32	3'-0"	A2	28	30	31	33
Double 3"x8"	N25	6'-5"	D	32	28	29	31	6'-1"	D	33	28	30	31	5'-9"	D	33	29	30	32	5'-6"	D	33	29	31	32	5'-3"	D	33	30	31	33
Double 2"x6.625"	N25	5'-11"	C	32	28	29	31	5'-8"	D	32	28	30	31	5'-5"	D	32	29	30	32	5'-2"	D	32	29	31	32	5'-0"	D	33	30	31	33
5.5" Extruded Fascia	L	5'-6"	C	31	28	29	31	5'-2"	C	31	28	30	31	4'-11"	C	31	29	30	32	4'-9"	C	31	29	31	32	4'-6"	C	32	30	31	33
California Fascia	N10, G	4'-6"	A3	29	28	29	31	4'-3"	A3	29	28	30	31	4'-0"	A3	29	29	30	32	3'-10"	A3	29	29	31	32	3'-8"	A3	29	30	31	33
Classic Fascia	H	9'-5"	F	37	28	29	31	9'-0"	F	37	28	30	31	8'-9"	F	38	29	30	32	8'-5"	G	38	29	31	32	8'-1"	G	38	30	31	33
16 G Steel C	N9, T	5'-2"	B	30	28	29	31	4'-10"	B	30	28	30	31	4'-6"	B	30	29	30	32	4'-3"	B	30	29	31	32	3'-11"	B	30	30	31	33
14 G Steel C	N9, T	7'-1"	E	33	28	29	31	6'-6"	E	33	28	30	31	6'-1"	E	33	29	30	32	5'-8"	E	33	29	31	32	5'-4"	E	33	30	31	33
12 G Steel C	N9, T	12'-2"	G	40	28	29	31	11'-6"	G	40	28	30	31	11'-0"	G	41	29	30	32	10'-6"	H1	41	29	31	32	10'-0"	H1	41	30	31	33
Double 16 G Steel C	N9, N25, T	13'-11"	H1	42	28	29	31	13'-4"	H1	42	28	30	31	12'-10"	H1	43	29	30	32	12'-4"	H1	43	29	31	32	11'-11"	H1	43	30	31	33
Double 14 G Steel C	N9, N25, T	16'-6"	H1	44	28	29	31	15'-10"	H1	45	28	30	31	15'-3"	H1	45	29	30	32	14'-8"	H2	46	29	31	32	14'-2"	H2	46	30	31	33
Double 12 G Steel C	N9, N25, T	22'-2"	H3	49	28	30	31	21'-4"	H3	49	29	30	32	20'-8"	H3	50	29	31	32	20'-0"	H3	51	29	31	32	19'-4"	H3	51	30	31	33
Steel Cloverleaf	W	3'-10"	A2	27	28	29	31	3'-7"	A2	27	28	30	31	3'-5"	A2	28	29	30	32	3'-3"	A2	28	29	31	32	3'-2"	A2	28	30	31	33
DBL Steel Cloverleaf	AA	7'-7"	E	34	28	29	31	7'-4"	E	35	28	30	31	7'-1"	E	35	29	30	32	6'-10"	E	35	29	31	32	6'-7"	E	36	30	31	33
4x3 I Beam	Y	5'-2"	B	30	28	29	31	4'-10"	B	30	28	30	31	4'-7"	C	30	29	30	32	4'-4"	C	30	29	31	32	4'-1"	C	31	30	31	33
7x4 I Beam	Q	8'-2"	E	35	28	29	31	7'-8"	E	35	28	30	31	7'-3"	E	35	29	30	32	6'-10"	E	35	29	31	32	6'-6"	E	36	30	31	33

Ground Snow Load: 10 psf **Live Load: 10 psf** **Wind Speed: 115 MPH EXPOSURE C or 140 MPH EXPOSURE B** **Seismic Ss= 150%** **Seismic Design Category D** **Freestanding Structures**

Table 5.6b (cubic footing "d")

Header	Detail	trib 3'	Min Post Type	Uplift Footing (in)	Constrained Footing (in) Max Post Length 8'	10'	12'	trib 3.5'	Min Post Type	Uplift Footing (in)	8'	10'	12'	trib 4'	Min Post Type	Uplift Footing (in)	8'	10'	12'	trib 4.5'	Min Post Type	Uplift Footing (in)	8'	10'	12'	trib 5'	Min Post Type	Uplift Footing (in)	8'	10'	12'
On Slab	On Slab	n/a	C					n/a	C					n/a	C					n/a	C					n/a	C				
0.042"x3"x8"	N30	10'-10"	A1	21	27	28	30	9'-10"	A1	21	26	28	29	9'-1"	A1	22	26	27	29	8'-5"	A1	22	25	27	28	7'-11"	A1	22	25	26	28
Double 3"x8"	N25	16'-0"	A2	24	30	31	33	14'-8"	A2	24	29	31	32	13'-8"	A3	25	29	30	32	12'-9"	A3	25	28	30	31	12'-0"	A3	26	28	29	31
Double 2"x6.625"	N25	14'-3"	A1	23	27	29	30	13'-1"	A2	23	27	28	30	12'-2"	A2	24	26	28	29	11'-5"	A2	24	26	28	29	10'-9"	A3	25	26	27	28
5.5" Extruded Fascia	L	13'-8"	A1	22	26	27	29	12'-7"	A1	23	25	27	28	11'-8"	A2	23	25	26	28	10'-10"	A2	24	24	26	27	10'-3"	A2	24	24	26	27
California Fascia	N10, G	12'-0"	A1	22	24	25	27	11'-0"	A1	22	24	25	26	10'-2"	A1	22	23	24	26	9'-5"	A1	23	23	24	25	8'-10"	A1	23	22	24	25
Classic Fascia	H	20'-3"	A3	26	29	31	32	18'-9"	C	26	28	30	32	17'-6"	C	27	28	30	31	16'-6"	D	27	28	29	31	15'-8"	D	28	27	29	30
16 G Steel C	N9, T	18'-3"	A3	25	31	32	34	16'-5"	A3	25	30	32	33	15'-0"	A3	26	29	31	32	13'-10"	A3	26	29	30	32	12'-10"	B	26	28	30	31
14 G Steel C	N9, T	21'-11"	C	26	32	34	36	19'-10"	C	27	31	33	35	18'-2"	D	27	31	32	34	16'-10"	D	28	30	32	33	15'-8"	D	28	30	31	33
12 G Steel C	N9, T	31'-11"	E	30	35	37	39	29'-2"	E	30	35	37	38	26'-10"	E	31	34	36	38	25'-0"	F	31	33	35	37	23'-5"	F	32	33	35	36
Double 16 G Steel C	N9, N25, T	31'-6"	E	30	35	37	39	29'-1"	E	30	35	37	38	27'-1"	E	31	34	36	38	25'-6"	F	32	33	35	37	24'-2"	F	32	33	35	37
Double 14 G Steel C	N9, N25, T	36'-2"	E	31	37	39	40	33'-5"	F	32	36	38	40	31'-3"	G	33	35	37	39	29'-5"	G	33	35	37	38	27'-11"	G	34	34	36	38
Double 12 G Steel C	N9, N25, T	40'-0"	F	32	37	40	41	40'-0"	G	34	37	40	41	40'-0"	H1	35	37	40	41	38'-11"	H1	36	37	39	41	36'-11"	H1	37	37	39	41
Steel Cloverleaf	W	10'-7"	A1	21	21	22	23	9'-7"	A1	21	20	22	23	8'-10"	A1	21	20	21	22	8'-2"	A1	22	20	22	23	7'-8"	A1	22	21	22	23
DBL Steel Cloverleaf	AA	16'-6"	A2	24	23	25	26	15'-3"	A3	25	23	24	25	14'-3"	A3	25	22	24	25	13'-5"	A3	26	22	23	25	12'-9"	B	26	22	23	24
4x3 I Beam	Y	11'-1"	A1	21	23	24	25	10'-8"	A1	22	22	24	25	10'-4"	A1	23	22	24	25	10'-0"	A2	23	22	23	25	9'-10"	A2	24	22	23	24
7x4 I Beam	Q	15'-8"	A2	24	29	30	32	15'-1"	A2	24	28	30	31	14'-8"	A3	25	28	30	31	14'-2"	B	26	28	29	31	13'-11"	C	27	28	29	31

Header	Detail	trib 5.5'	Min Post Type	Uplift Footing (in)	Constrained Footing (in) Max Post Length 8'	10'	12'	trib 6'	Min Post Type	Uplift Footing (in)	8'	10'	12'	trib 6.5'	Min Post Type	Uplift Footing (in)	8'	10'	12'	trib 7'	Min Post Type	Uplift Footing (in)	8'	10'	12'	trib 7.5'	Min Post Type	Uplift Footing (in)	8'	10'	12'	trib 8'	Min Post Type	Uplift Footing (in)	8'	10'	12'
On Slab	On Slab	n/a	C					n/a	C					n/a	C					n/a	C					n/a	C					n/a	C				
0.042"x3"x8"	N30	7'-5"	A1	22	24	26	27	7'-0"	A1	23	24	25	27	6'-8"	A1	23	24	25	26	6'-4"	A1	23	23	25	26	6'-1"	A2	23	23	25	26	5'-9"	A2	23	24	25	26
Double 3"x8"	N25	11'-4"	A3	26	27	29	30	10'-10"	C	26	27	28	30	10'-4"	C	26	27	28	29	9'-10"	C	27	26	28	29	9'-6"	C	27	26	28	29	9'-2"	D	27	26	27	29
Double 2"x6.625"	N25	10'-3"	A3	25	25	27	28	9'-9"	A3	25	25	26	28	9'-4"	A3	26	25	26	27	8'-11"	A3	26	24	26	27	8'-8"	C	26	24	26	27	8'-4"	C	26	24	25	27
5.5" Extruded Fascia	L	9'-8"	A3	25	24	25	26	9'-2"	A3	25	23	25	26	8'-9"	A3	25	23	25	26	8'-4"	A3	25	23	25	26	8'-1"	A3	26	23	25	26	7'-9"	A3	26	24	25	26
California Fascia	N10, G	8'-4"	A2	23	22	23	24	7'-10"	A2	24	22	23	24	7'-6"	A2	24	22	24	25	7'-1"	A2	24	23	24	25	6'-10"	A2	24	23	25	26	6'-7"	A2	24	24	25	26
Classic Fascia	H	14'-11"	D	28	27	28	30	14'-4"	E	29	27	28	29	13'-9"	E	29	26	28	29	13'-3"	E	29	26	28	29	12'-11"	E	30	26	27	29	12'-6"	E	30	26	27	28
16 G Steel C	N9, T	12'-0"	C	26	28	29	31	11'-3"	C	27	27	29	30	10'-7"	C	27	27	28	30	10'-1"	C	27	26	28	29	9'-8"	C	27	26	28	29	9'-1"	D	27	26	27	29
14 G Steel C	N9, T	14'-8"	D	28	29	31	32	13'-9"	D	28	29	30	32	13'-0"	E	29	28	30	31	12'-5"	E	29	28	29	31	11'-11"	E	29	28	29	31	11'-4"	E	29	27	29	30
12 G Steel C	N9, T	22'-1"	F	32	32	34	36	20'-11"	G	33	32	34	35	19'-11"	G	33	31	33	35	19'-0"	G	33	31	33	34	18'-4"	G	34	31	33	34	17'-6"	G	34	30	32	34
Double 16 G Steel C	N9, N25, T	22'-11"	G	33	33	34	36	21'-11"	G	33	32	34	36	21'-0"	G	34	32	34	35	20'-2"	G	34	31	33	35	19'-7"	G	34	31	33	35	18'-11"	G	35	31	33	34
Double 14 G Steel C	N9, N25, T	26'-7"	G	34	34	36	37	25'-5"	G	35	33	35	37	24'-4"	H1	35	33	35	37	23'-5"	H1	36	33	35	36	22'-9"	H1	36	32	34	36	22'-0"	H1	37	32	34	36
Double 12 G Steel C	N9, N25, T	35'-2"	H1	38	36	38	40	33'-8"	H1	38	36	38	40	32'-4"	H1	39	35	38	39	31'-2"	H2	39	35	37	39	30'-3"	H2	40	35	37	39	29'-4"	H2	40	35	37	38
Steel Cloverleaf	W	7'-2"	A1	22	21	23	24	6'-10"	A1	22	22	23	24	6'-5"	A1	23	22	24	25	6'-2"	A1	23	23	24	25	5'-11"	A2	23	23	25	26	5'-8"	A2	23	24	25	26
DBL Steel Cloverleaf	AA	12'-2"	C	26	22	23	24	11'-7"	C	27	22	23	24	11'-2"	C	27	22	24	25	10'-9"	D	28	23	24	25	10'-5"	D	28	23	25	26	10'-1"	D	28	24	25	26
4x3 I Beam	Y	9'-5"	A2	24	22	23	24	9'-0"	A3	25	22	23	24	8'-8"	A3	25	22	24	25	8'-4"	A3	25	23	24	25	8'-1"	A3	26	23	25	26	7'-10"	B	26	24	25	26
7x4 I Beam	Q	13'-6"	D	27	28	29	30	13'-2"	D	28	27	29	30	13'-0"	E	29	27	29	30	12'-9"	E	29	27	29	30	12'-6"	E	30	27	29	30	12'-4"	E	30	27	28	30

Header	Detail	trib 8.5'	Min Post Type	Uplift Footing (in)	Footing (in) Max Post Length 8'	10'	12'	trib 9'	Min Post Type	Uplift Footing (in)	8'	10'	12'	trib 10'	Min Post Type	Uplift Footing (in)	8'	10'	12'	trib 11'	Min Post Type	Uplift Footing (in)	8'	10'	12'	trib 12'	Min Post Type	Uplift Footing (in)	8'	10'	12'
On Slab	On Slab	n/a	C					n/a	C					n/a	C					n/a	C					n/a	C				
0.042"x3"x8"	N30	5'-6"	A2	24	24	25	27	5'-4"	A2	24	24	26	27	4'-11"	A2	24	25	26	28	4'-7"	A2	24	26	27	28	4'-3"	A2	24	26	28	29
Double 3"x8"	N25	8'-10"	D	27	26	27	28	8'-6"	D	28	25	27	28	7'-11"	D	28	25	26	28	7'-6"	D	28	26	27	28	7'-0"	E	29	26	28	29
Double 2"x6.625"	N25	8'-0"	C	27	24	25	27	7'-9"	C	27	24	26	27	7'-3"	D	27	25	26	28	6'-10"	D	28	26	27	28	6'-6"	D	28	26	28	29
5.5" Extruded Fascia	L	7'-6"	B	26	24	25	27	7'-3"	C	26	24	26	27	6'-9"	C	27	25	26	28	6'-4"	C	27	26	27	28	6'-0"	C	27	26	28	29
California Fascia	N10, G	6'-4"	A3	25	24	25	27	6'-1"	A3	25	24	26	27	5'-8"	A3	25	25	26	28	5'-3"	A3	25	26	27	28	4'-11"	A3	25	26	28	29
Classic Fascia	H	12'-1"	E	31	25	27	28	11'-9"	E	31	25	27	28	11'-2"	E	31	25	26	28	10'-7"	F	32	26	27	28	10'-2"	F	32	26	28	29
16 G Steel C	N9, T	8'-6"	C	27	25	27	28	8'-0"	C	27	25	26	28	7'-3"	C	27	25	26	28	6'-7"	C	27	26	27	28	6'-0"	C	27	26	28	29
14 G Steel C	N9, T	10'-10"	E	29	27	28	30	10'-5"	E	30	27	28	30	9'-7"	E	30	26	28	29	8'-10"	E	30	26	27	28	8'-1"	E	30	26	28	29
12 G Steel C	N9, T	16'-10"	G	34	30	32	33	16'-3"	G	34	30	32	33	15'-1"	G	35	29	31	32	14'-2"	H1	35	29	30	32	13'-4"	H1	35	28	30	31
Double 16 G Steel C	N9, N25, T	18'-3"	H1	35	31	33	34	17'-9"	H1	35	30	32	34	16'-8"	H1	36	30	32	33	15'-10"	H1	36	30	31	33	15'-1"	H1	37	29	31	32
Double 14 G Steel C	N9, N25, T	21'-4"	H1	37	32	34	35	20'-8"	H1	37	32	34	35	19'-7"	H1	38	31	33	35	18'-7"	H1	38	31	33	34	17'-9"	H1	39	30	32	34
Double 12 G Steel C	N9, N25, T	28'-5"	H2	41	34	36	38	27'-7"	H2	41	34	36	38	26'-2"	H2	42	34	36	37	24'-11"	H3	42	33	35	37	23'-10"	H3	43	33	35	36
Steel Cloverleaf	W	5'-5"	A2	23	24	25	27	5'-3"	A2	24	24	26	27	4'-10"	A2	24	25	26	28	4'-6"	A2	24	26	27	28	4'-3"	A2	24	26	28	29
DBL Steel Cloverleaf	AA	9'-9"	D	28	24	25	27	9'-6"	E	29	24	26	27	9'-0"	E	29	25	26	28	8'-7"	E	30	26	27	28	8'-2"	E	30	26	28	29
4x3 I Beam	Y	7'-7"	C	26	24	25	27	7'-3"	C	26	24	26	27	6'-8"	C	26	25	26	28	6'-2"	C	27	26	27	28	5'-9"	C	27	26	28	29
7x4 I Beam	Q	12'-1"	E	30	27	28	30	11'-6"	E	31	26	28	29	10'-8"	E	31	26	27	29	9'-10"	E	31	26	27	28	9'-2"	E	31	26	28	29

Header	Detail	trib 13'	Min Post Type	Uplift Footing (in)	Footing (in) Max Post Length 8'	10'	12'	trib 14'	Min Post Type	Uplift Footing (in)	8'	10'	12'	trib 15'	Min Post Type	Uplift Footing (in)	8'	10'	12'	trib 16'	Min Post Type	Uplift Footing (in)	8'	10'	12'	trib 17'	Min Post Type	Uplift Footing (in)	8'	10'	12'
On Slab	On Slab	n/a	C					n/a	C					n/a	C					n/a	C					n/a	C				
0.042"x3"x8"	N30	4'-0"	A2	24	27	28	30	3'-9"	A3	24	27	29	30	3'-7"	A3	25	28	29	31	3'-4"	A3	25	28	30	31	3'-2"	A3	25	29	30	32
Double 3"x8"	N25	6'-8"	E	29	27	28	30	6'-4"	E	29	27	29	30	6'-1"	E	29	28	29	31	5'-9"	E	30	28	30	31	5'-6"	E	30	29	30	32
Double 2"x6.625"	N25	6'-2"	D	28	27	28	30	5'-11"	D	28	27	29	30	5'-8"	E	29	28	29	31	5'-5"	E	29	28	30	31	5'-2"	E	29	29	30	32
5.5" Extruded Fascia	L	5'-8"	D	27	27	28	30	5'-5"	D	28	27	29	30	5'-2"	D	28	28	29	31	4'-11"	D	28	28	30	31	4'-9"	D	28	29	30	32
California Fascia	N10, G	4'-8"	A3	26	27	28	30	4'-5"	A3	26	27	29	30	4'-3"	B	26	28	29	31	4'-0"	C	26	28	30	31	3'-10"	C	26	29	30	32
Classic Fascia	H	9'-9"	G	33	27	28	30	9'-4"	G	33	27	29	30	9'-0"	G	33	28	29	31	8'-9"	G	34	28	30	31	8'-5"	G	34	29	30	32
16 G Steel C	N9, T	5'-6"	C	27	27	28	30	5'-2"	C	27	27	29	30	4'-10"	D	27	28	29	31	4'-6"	D	27	28	30	31	4'-3"	C	27	29	30	32
14 G Steel C	N9, T	7'-6"	E	30	27	28	30	6'-11"	E	30	27	29	30	6'-6"	E	30	28	29	31	6'-1"	E	30	28	30	31	5'-9"	E	30	29	30	32
12 G Steel C	N9, T	12'-8"	H1	36	28	30	31	12'-0"	H1	36	28	29	31	11'-6"	H1	36	28	29	31	11'-0"	H1	37	28	30	31	10'-6"	H1	37	29	30	32
Double 16 G Steel C	N9, N25, T	14'-5"	H1	37	29	31	32	13'-10"	H1	38	29	30	32	13'-4"	H1	38	28	30	31	12'-10"	H1	38	28	30	31	12'-4"	H1	39	29	30	32
Double 14 G Steel C	N9, N25, T	17'-0"	H2	39	30	32	33	16'-4"	H2	40	30	32	33	15'-10"	H2	40	30	31	33	15'-3"	H2	41	29	31	33	14'-9"	H2	41	29	31	32
Double 12 G Steel C	N9, N25, T	22'-11"	H3	43	33	34	36	22'-0"	H3	44	32	34	36	21'-4"	H4	45	32	34	35	20'-8"	H4	45	32	34	35	20'-0"	H4	45	31	33	35
Steel Cloverleaf	W	4'-0"	A2	24	27	28	30	3'-10"	A3	25	27	29	30	3'-7"	A3	25	28	29	31	3'-5"	A3	25	28	30	31	3'-4"	A3	25	29	30	32
DBL Steel Cloverleaf	AA	7'-10"	E	30	27	28	30	7'-7"	E	31	27	29	30	7'-4"	E	31	28	29	31	7'-1"	F	32	28	30	31	6'-10"	F	32	29	30	32
4x3 I Beam	Y	5'-5"	C	27	27	28	30	5'-1"	C	27	27	29	30	4'-10"	D	27	28	29	31	4'-7"	D	27	28	30	31	4'-4"	D	27	29	30	32
7x4 I Beam	Q	8'-7"	E	31	27	28	30	8'-1"	F	32	27	29	30	7'-8"	F	32	28	29	31	7'-3"	F	32	28	30	31	6'-11"	F	32	29	30	32

Amerimax Exterior Home Products
28921 US Hwy 74
Romoland, CA 92585

Carl Putnam, P. E.
3441 Ivylink Place
Lynchburg, VA 24503
carlputnam@comcast.net

Registered Professional Engineer (Civil) CERTIFICATE NO. 39702 CARL PUTNAM Date Signed ARIZONA U.S.A. Expires 09/30/2024

JAN 20 2023

SECTION 5.0 POST SPACING, POST TYPE AND FOOTING SIZE FOR SOLID COVERS

Roof Solidity: 100%

Ground Snow Load: 20 psf Live Load: 20 psf Wind Speed: 95 MPH EXPOSURE C or 110 MPH EXPOSURE B Seismic Ss= 150% Seismic Design Category D Structures are Attached to Existing Building

Table 5.13a (cubic footing "d"; Constrained Footing (in) by Max Post Length)

Header	Detail	trib 3'	Min Post Type	Uplift Footing (in)	8'	12'	15'	trib 3.5'	Min Post Type	Uplift Footing (in)	8'	12'	15'	trib 4'	Min Post Type	Uplift Footing (in)	8'	12'	15'	trib 4.5'	Min Post Type	Uplift Footing (in)	8'	12'	15'	trib 5'	Min Post Type	Uplift Footing (in)	8'	12'	15'
On Slab	On Slab	11'-10"	A1					10'-2"	A1					8'-11"	A1					7'-11"	A1					7'-1"	A1				
0.042"x3"x8"	N30	9'-10"	A1	20	17	19	20	8'-11"	A1	20	18	20	21	8'-2"	A1	21	19	21	22	7'-7"	A1	21	19	21	22	7'-1"	A1	21	20	22	23
Double 3"x8"	N25	14'-8"	A2	23	18	19	21	13'-5"	A3	23	18	20	21	12'-5"	A3	24	19	21	22	11'-7"	A3	24	19	21	22	10'-11"	C	25	20	22	23
Double 2"x6.625"	N25	13'-1"	A2	22	17	19	20	12'-0"	A2	23	18	20	21	11'-2"	A2	23	19	21	22	10'-5"	A3	23	19	21	22	9'-10"	A3	24	20	22	23
5.5" Extruded Fascia	L	11'-10"	A1	21	17	19	20	11'-3"	A2	22	18	20	21	10'-7"	A2	23	19	21	22	9'-11"	A2	23	19	21	22	9'-3"	A3	23	20	22	23
California Fascia	N10, G	11'-0"	A1	21	17	19	20	10'-0"	A1	21	18	20	21	9'-2"	A1	22	19	21	22	8'-6"	A2	22	19	21	22	7'-11"	A2	22	20	22	23
Classic Fascia	H	14'-3"	A2	23	17	19	20	13'-6"	A3	23	18	20	21	13'-0"	A3	24	19	21	22	12'-6"	C	25	19	21	22	12'-1"	C	25	20	22	23
16 G Steel C	N9, T	16'-5"	A3	24	18	20	21	14'-9"	A3	24	18	20	21	13'-5"	B	24	19	21	22	12'-4"	C	25	19	21	22	11'-5"	C	25	20	22	23
14 G Steel C	N9, T	19'-10"	C	25	19	21	22	17'-10"	D	26	19	21	23	16'-4"	D	26	19	22	23	15'-0"	D	26	20	22	23	13'-11"	D	27	20	22	23
12 G Steel C	N9, T	26'-4"	E	28	20	23	24	25'-1"	E	29	21	23	25	24'-0"	F	30	21	24	25	22'-7"	F	30	22	24	26	21'-2"	G	31	22	24	26
Double 16 G Steel C	N9, N25, T	25'-5"	E	28	20	22	24	24'-2"	E	28	21	23	24	23'-2"	E	29	21	24	25	22'-4"	F	30	22	24	25	21'-7"	G	31	22	24	26
Double 14 G Steel C	N9, N25, T	27'-9"	E	28	21	23	24	26'-5"	E	29	21	24	25	25'-3"	F	30	22	24	25	24'-4"	G	31	22	25	26	23'-6"	G	32	23	25	26
Double 12 G Steel C	N9, N25, T	33'-3"	F	30	22	24	25	31'-7"	G	31	22	25	26	30'-3"	G	32	23	25	27	29'-2"	G	33	23	26	27	28'-2"	H1	34	24	26	28
Steel Cloverleaf	W	9'-7"	A1	20	17	19	20	8'-8"	A1	20	18	20	21	8'-0"	A1	21	19	21	22	7'-5"	A1	21	19	21	22	6'-11"	A1	21	20	22	23
DBL Steel Cloverleaf	AA	12'-10"	A2	22	17	19	20	12'-3"	A2	23	18	20	21	11'-8"	A3	23	19	21	22	11'-3"	A3	24	19	21	22	10'-11"	B	25	20	22	23
4x3 I Beam	Y	11'-1"	A1	21	17	19	20	10'-9"	A1	22	18	20	21	10'-2"	A2	22	19	21	22	9'-7"	A2	23	19	21	22	9'-1"	A3	23	20	22	23
7x4 I Beam	Q	15'-8"	A3	23	18	20	21	15'-3"	A3	24	18	20	22	14'-8"	C	25	19	21	22	14'-4"	D	26	19	21	23	13'-11"	D	27	20	22	23

Header	Detail	trib 5.5'	Min Post Type	Uplift Footing (in)	8'	12'	15'	trib 6'	Min Post Type	Uplift Footing (in)	8'	12'	15'	trib 6.5'	Min Post Type	Uplift Footing (in)	8'	12'	15'	trib 7'	Min Post Type	Uplift Footing (in)	8'	12'	15'	trib 7.5'	Min Post Type	Uplift Footing (in)	8'	12'	15'	trib 8'	Min Post Type	Uplift Footing (in)	8'	12'	15'
On Slab	On Slab	6'-5"	A1					5'-11"	A1					5'-5"	A1					5'-1"	A1					4'-9"	A1					4'-5"	A1				
0.042"x3"x8"	N30	6'-8"	A1	22	20	22	24	6'-4"	A2	22	21	23	24	5'-11"	A2	22	21	23	25	5'-8"	A2	22	21	24	25	5'-4"	A2	22	22	24	26	5'-2"	A2	22	22	25	26
Double 3"x8"	N25	10'-5"	C	25	20	22	24	9'-10"	C	25	21	23	24	9'-4"	C	26	21	23	25	8'-11"	D	26	21	24	25	8'-7"	D	26	22	24	26	8'-3"	D	26	22	25	26
Double 2"x6.625"	N25	9'-5"	A3	24	20	22	24	8'-11"	B	24	21	23	24	8'-6"	C	25	21	23	25	8'-2"	C	25	21	24	25	7'-10"	C	25	22	24	26	7'-7"	C	25	22	25	26
5.5" Extruded Fascia	L	8'-10"	A3	24	20	22	24	8'-4"	A3	24	21	23	24	8'-0"	A3	24	21	23	25	7'-7"	A3	24	21	24	25	7'-3"	C	25	22	24	26	7'-0"	C	25	22	25	26
California Fascia	N10, G	7'-7"	A2	22	20	22	24	7'-1"	A2	23	21	23	24	6'-9"	A2	23	21	23	25	6'-5"	A3	23	21	24	25	6'-1"	A3	23	22	24	26	5'-11"	A3	23	22	25	26
Classic Fascia	H	11'-8"	D	26	20	22	24	11'-4"	D	27	21	23	24	11'-1"	E	27	21	23	25	10'-9"	E	27	21	24	25	10'-7"	E	28	22	24	26	10'-4"	E	28	22	25	26
16 G Steel C	N9, T	10'-9"	C	25	20	22	24	10'-1"	C	25	21	23	24	9'-5"	C	26	21	23	25	8'-9"	C	26	21	24	25	8'-2"	C	26	22	24	26	7'-8"	C	26	22	25	26
14 G Steel C	N9, T	13'-2"	E	27	20	22	24	12'-5"	E	27	21	23	24	11'-8"	E	27	21	23	25	11'-1"	E	28	21	24	25	10'-6"	E	28	22	24	26	10'-1"	E	28	22	25	26
12 G Steel C	N9, T	20'-1"	G	31	22	25	26	19'-0"	G	31	22	25	26	18'-0"	G	32	23	25	26	17'-1"	G	32	23	25	27	16'-4"	G	32	23	25	27	15'-9"	G	33	23	25	27
Double 16 G Steel C	N9, N25, T	20'-11"	G	32	22	25	26	20'-2"	G	32	23	25	27	19'-4"	G	32	23	25	27	18'-6"	G	33	23	26	27	17'-10"	H1	33	23	26	27	17'-4"	H1	34	24	26	28
Double 14 G Steel C	N9, N25, T	22'-9"	G	32	23	25	27	22'-2"	H1	33	23	26	27	21'-7"	H1	34	24	26	28	21'-1"	H1	34	24	26	28	20'-7"	H1	35	24	27	28	20'-2"	H1	35	24	27	29
Double 12 G Steel C	N9, N25, T	27'-3"	H1	34	24	27	28	26'-6"	H1	35	24	27	29	25'-10"	H1	36	25	27	29	25'-2"	H1	36	25	28	29	24'-8"	H2	37	25	28	30	24'-1"	H2	37	26	28	30
Steel Cloverleaf	W	6'-6"	A1	21	20	22	24	6'-2"	A1	22	21	23	24	5'-10"	A2	22	21	23	25	5'-6"	A2	22	21	24	25	5'-3"	A2	22	22	24	26	5'-1"	A2	22	22	25	26
DBL Steel Cloverleaf	AA	10'-7"	C	25	20	22	24	10'-3"	C	26	21	23	24	10'-0"	D	26	21	23	25	9'-9"	D	27	21	24	25	9'-6"	D	27	22	24	26	9'-3"	E	27	22	25	26
4x3 I Beam	Y	8'-8"	A3	24	20	22	24	8'-4"	A3	24	21	23	24	8'-0"	A3	24	21	23	25	7'-8"	B	25	21	24	25	7'-4"	C	25	22	24	26	7'-0"	C	25	22	25	26
7x4 I Beam	Q	13'-7"	E	27	20	22	24	13'-3"	E	28	21	23	24	13'-0"	E	28	21	23	25	12'-3"	E	29	21	24	25	11'-8"	E	29	22	24	26	11'-2"	E	29	22	25	26

Header	Detail	trib 8.5'	Min Post Type	Uplift Footing (in)	8'	12'	15'	trib 9'	Min Post Type	Uplift Footing (in)	8'	12'	15'	trib 10'	Min Post Type	Uplift Footing (in)	8'	12'	15'	trib 10.5'	Min Post Type	Uplift Footing (in)	8'	12'	15'	trib 11'	Min Post Type	Uplift Footing (in)	8'	12'	15'
On Slab	On Slab	4'-2"	A1					3'-11"	A1					3'-6"	A1					3'-4"	A1					3'-2"	A1				
0.042"x3"x8"	N30	4'-11"	A2	23	23	25	26	4'-8"	A2	23	23	25	27	4'-4"	A2	23	23	26	28	4'-2"	A2	23	24	26	28	4'-0"	A2	23	24	27	28
Double 3"x8"	N25	7'-11"	D	26	23	25	26	7'-8"	D	27	23	25	27	7'-1"	D	27	23	26	28	6'-11"	E	27	24	26	28	6'-8"	E	27	24	27	28
Double 2"x6.625"	N25	7'-3"	D	26	23	25	26	7'-0"	D	26	23	25	27	6'-7"	D	26	23	26	28	6'-5"	D	26	24	26	28	6'-3"	D	27	24	27	28
5.5" Extruded Fascia	L	6'-9"	C	25	23	25	26	6'-6"	C	25	23	25	27	6'-1"	C	26	23	26	28	5'-11"	D	26	24	26	28	5'-9"	D	26	24	27	28
California Fascia	N10, G	5'-8"	A3	24	23	25	26	5'-5"	A3	24	23	25	27	5'-0"	A3	24	23	26	28	4'-10"	A3	24	24	26	28	4'-8"	A3	24	24	27	28
Classic Fascia	H	10'-1"	E	29	23	25	26	9'-11"	E	29	23	25	27	9'-7"	F	30	23	26	28	9'-5"	F	30	24	26	28	9'-3"	F	30	24	27	28
16 G Steel C	N9, T	7'-3"	C	26	23	25	26	6'-10"	C	26	23	25	27	6'-1"	C	26	23	26	28	5'-10"	D	26	24	26	28	5'-7"	C	26	24	27	28
14 G Steel C	N9, T	9'-7"	E	28	23	25	26	9'-2"	E	28	23	25	27	8'-3"	E	28	23	26	28	7'-11"	E	28	24	26	28	7'-7"	E	28	24	27	28
12 G Steel C	N9, T	15'-1"	G	33	23	26	27	14'-7"	G	33	23	26	27	13'-6"	H1	33	23	26	28	13'-2"	H1	34	24	26	28	12'-9"	H1	34	24	27	28
Double 16 G Steel C	N9, N25, T	16'-8"	H1	34	24	26	28	16'-2"	H1	34	24	26	28	15'-3"	H1	35	24	27	28	14'-10"	H1	35	24	27	28	14'-6"	H1	35	24	27	29
Double 14 G Steel C	N9, N25, T	19'-7"	H1	36	25	27	29	19'-0"	H1	36	25	27	29	17'-11"	H1	37	25	28	29	17'-6"	H1	37	25	28	30	17'-1"	H2	37	25	28	30
Double 12 G Steel C	N9, N25, T	23'-8"	H2	38	26	29	30	23'-2"	H2	38	26	29	31	22'-5"	H3	39	27	29	31	22'-0"	H3	40	27	30	31	21'-8"	H3	40	27	30	32
Steel Cloverleaf	W	4'-10"	A2	22	23	25	26	4'-8"	A2	23	23	25	27	4'-4"	A2	23	23	26	28	4'-2"	A2	23	24	26	28	4'-0"	A2	23	24	27	28
DBL Steel Cloverleaf	AA	9'-0"	E	28	23	25	26	8'-9"	E	28	23	25	27	8'-3"	E	28	23	26	28	8'-1"	E	29	24	26	28	7'-11"	E	29	24	27	28
4x3 I Beam	Y	6'-8"	C	25	23	25	26	6'-5"	C	25	23	25	27	5'-10"	C	25	23	26	28	5'-8"	C	25	24	26	28	5'-5"	C	25	24	27	28
7x4 I Beam	Q	10'-8"	E	29	23	25	26	10'-2"	E	29	23	25	27	9'-4"	E	29	23	26	28	9'-0"	E	30	24	26	28	8'-8"	F	30	24	27	28

Header	Detail	trib 11.5'	Min Post Type	Uplift Footing (in)	8'	12'	15'	trib 12'	Min Post Type	Uplift Footing (in)	8'	12'	15'	trib 13'	Min Post Type	Uplift Footing (in)	8'	12'	15'	trib 14'	Min Post Type	Uplift Footing (in)	8'	12'	15'	trib 15'	Min Post Type	Uplift Footing (in)	8'	12'	15'
On Slab	On Slab	3'-1"	A1					2'-11"	A1					2'-8"	A1					2'-6"	A1					2'-4"	A1				
0.042"x3"x8"	N30	3'-10"	A2	23	24	27	29	3'-9"	A3	23	25	27	29	3'-6"	A3	23	25	28	29	3'-3"	A3	23	26	28	30	3'-1"	A3	23	26	29	31
Double 3"x8"	N25	6'-6"	E	27	24	27	29	6'-4"	E	27	25	27	29	6'-0"	E	28	25	28	29	5'-8"	E	28	26	28	30	5'-4"	E	28	26	29	31
Double 2"x6.625"	N25	6'-0"	D	27	24	27	29	5'-10"	D	27	25	27	29	5'-7"	E	27	25	28	29	5'-4"	E	27	26	28	30	5'-1"	E	28	26	29	31
5.5" Extruded Fascia	L	5'-7"	D	26	24	27	29	5'-5"	D	26	25	27	29	5'-1"	D	26	25	28	29	4'-10"	D	27	26	28	30	4'-7"	D	27	26	29	31
California Fascia	N10, G	4'-6"	A3	24	24	27	29	4'-5"	A3	24	25	27	29	4'-2"	B	25	25	28	29	3'-11"	C	25	26	28	30	3'-8"	C	25	26	29	31
Classic Fascia	H	9'-2"	G	31	24	27	29	9'-0"	G	31	25	27	29	8'-9"	G	32	25	28	29	8'-7"	G	32	26	28	30	8'-3"	G	32	26	29	31
16 G Steel C	N9, T	5'-4"	C	26	24	27	29	5'-1"	C	26	25	27	29	4'-9"	D	26	25	28	29	4'-4"	C	26	26	28	30	4'-1"	C	26	26	29	31
14 G Steel C	N9, T	7'-2"	E	28	24	27	29	6'-11"	E	28	25	27	29	6'-5"	E	28	25	28	29	5'-11"	E	28	26	28	30	5'-6"	E	28	26	29	31
12 G Steel C	N9, T	12'-4"	H1	34	24	27	29	12'-0"	H1	34	25	27	29	11'-4"	H1	34	25	28	29	10'-9"	H1	35	26	28	30	10'-3"	H1	35	26	29	31
Double 16 G Steel C	N9, N25, T	14'-1"	H1	35	24	27	29	13'-9"	H1	36	25	27	29	13'-2"	H1	36	25	28	29	12'-7"	H1	36	26	28	30	12'-1"	H1	37	26	29	31
Double 14 G Steel C	N9, N25, T	16'-8"	H2	37	26	28	30	16'-4"	H2	38	26	28	30	15'-8"	H2	38	26	29	30	15'-0"	H2	39	26	29	31	14'-4"	H2	39	26	29	31
Double 12 G Steel C	N9, N25, T	21'-5"	H3	41	27	30	32	21'-1"	H3	41	27	30	32	20'-6"	H4	42	28	31	33	20'-0"	H4	42	28	31	33	19'-7"	H4	43	28	32	33
Steel Cloverleaf	W	3'-11"	A3	23	24	27	29	3'-9"	A3	23	25	27	29	3'-7"	A3	23	25	28	29	3'-4"	A3	24	26	28	30	3'-2"	A3	24	26	29	31
DBL Steel Cloverleaf	AA	7'-8"	E	29	24	27	29	7'-6"	E	29	25	27	29	7'-3"	E	30	25	28	29	7'-0"	F	30	26	28	30	6'-9"	F	30	26	29	31
4x3 I Beam	Y	5'-3"	C	25	24	27	29	5'-1"	C	26	25	27	29	4'-9"	D	26	25	28	29	4'-5"	D	26	26	28	30	4'-2"	D	26	26	29	31
7x4 I Beam	Q	8'-4"	F	30	24	27	29	8'-1"	F	30	25	27	29	7'-7"	F	30	25	28	29	7'-1"	F	30	26	28	30	6'-8"	F	30	26	29	31

Ground Snow Load: 20 psf Live Load: 20 psf Wind Speed: 95 MPH EXPOSURE C or 115 MPH EXPOSURE B Seismic Ss= 150% Seismic Design Category D Freestanding Structures

Table 5.13b (cubic footing "d"; Constrained Footing (in) by Max Post Length)

Header	Detail	trib 3'	Min Post Type	Uplift Footing (in)	8'	12'	15'	trib 3.5'	Min Post Type	Uplift Footing (in)	8'	12'	15'	trib 4'	Min Post Type	Uplift Footing (in)	8'	12'	15'	trib 4.5'	Min Post Type	Uplift Footing (in)	8'	12'	15'	trib 5'	Min Post Type	Uplift Footing (in)	8'	12'	15'
On Slab	On Slab	n/a	A1					n/a	A1					n/a	A1					n/a	A1					n/a	A1				
0.042"x3"x8"	N30	9'-8"	A1	18	24	26	28	8'-10"	A1	18	23	26	27	8'-1"	A1	18	23	25	27	7'-6"	A1	18	22	25	26	7'-0"	A1	19	22	24	26
Double 3"x8"	N25	14'-5"	A2	20	26	29	31	13'-3"	A3	20	26	28	30	12'-4"	A3	21	25	28	30	11'-6"	A3	21	25	27	29	10'-10"	C	22	24	27	29
Double 2"x6.625"	N25	12'-11"	A2	19	24	27	29	11'-10"	A2	20	24	26	28	11'-0"	A3	20	23	26	27	10'-4"	A3	21	23	25	27	9'-9"	A3	21	23	25	27
5.5" Extruded Fascia	L	11'-10"	A1	19	23	25	27	11'-3"	A2	19	22	25	26	10'-6"	A2	20	22	24	26	9'-9"	A3	20	22	24	25	9'-2"	A3	20	21	24	25
California Fascia	N10, G	10'-9"	A1	18	21	24	25	9'-10"	A1	19	21	23	24	9'-1"	A1	19	20	23	24	8'-5"	A2	19	20	22	23	7'-10"	A2	19	20	22	23
Classic Fascia	H	14'-3"	A2	20	24	27	28	13'-6"	A3	21	24	26	28	13'-0"	A3	21	23	26	28	12'-6"	C	22	23	26	27	12'-1"	C	22	23	26	27
16 G Steel C	N9, T	16'-1"	A3	21	27	30	32	14'-6"	A3	21	26	29	31	13'-2"	B	21	26	28	30	12'-2"	C	22	25	28	29	11'-3"	C	22	25	27	29
14 G Steel C	N9, T	19'-6"	C	22	28	31	33	17'-7"	D	23	28	31	32	16'-1"	D	23	27	30	32	14'-10"	D	23	26	29	31	13'-9"	D	23	26	29	30
12 G Steel C	N9, T	26'-4"	E	24	31	34	36	25'-1"	E	25	30	33	35	24'-0"	F	26	30	33	35	22'-4"	F	26	29	33	34	20'-11"	G	27	29	32	34
Double 16 G Steel C	N9, N25, T	25'-5"	E	24	30	34	36	24'-2"	E	25	30	33	35	23'-2"	E	26	30	33	35	22'-4"	F	26	29	32	34	21'-7"	G	27	29	32	34
Double 14 G Steel C	N9, N25, T	27'-9"	E	25	31	34	36	26'-5"	E	26	31	34	36	25'-3"	F	27	30	34	36	24'-4"	G	27	30	33	35	23'-6"	G	28	30	33	35
Double 12 G Steel C	N9, N25, T	33'-3"	F	26	32	36	38	31'-7"	G	27	32	35	38	30'-3"	G	28	32	35	37	29'-2"	H1	29	31	35	37	28'-2"	H1	30	31	34	36
Steel Cloverleaf	W	9'-5"	A1	17	18	20	22	8'-7"	A1	18	18	20	21	7'-10"	A1	18	18	20	21	7'-3"	A1	18	18	20	22	6'-10"	A1	18	19	21	22
DBL Steel Cloverleaf	AA	12'-10"	A2	19	20	22	23	12'-3"	A2	20	20	22	23	11'-8"	A3	21	19	21	23	11'-3"	A3	21	19	21	23	10'-11"	C	22	19	21	22
4x3 I Beam	Y	11'-7"	A1	19	21	23	24	10'-9"	A2	19	20	23	24	10'-1"	A2	20	20	22	24	9'-6"	A2	20	20	22	23	9'-0"	A3	20	19	22	23
7x4 I Beam	Q	17'-3"	A3	21	27	29	31	16'-9"	C	22	26	29	31	16'-1"	D	23	26	29	31	15'-8"	E	24	26	29	30	15'-3"	E	24	26	29	30

Header	Detail	trib 5.5'	Min Post Type	Uplift Footing (in)	8'	12'	15'	trib 6'	Min Post Type	Uplift Footing (in)	8'	12'	15'	trib 6.5'	Min Post Type	Uplift Footing (in)	8'	12'	15'	trib 7'	Min Post Type	Uplift Footing (in)	8'	12'	15'	trib 7.5'	Min Post Type	Uplift Footing (in)	8'	12'	15'	trib 8'	Min Post Type	Uplift Footing (in)	8'	12'	15'
On Slab	On Slab	n/a	A1					n/a	A1					n/a	A1					n/a	A1					n/a	A1					n/a	A1				
0.042"x3"x8"	N30	6'-7"	A1	19	21	24	25	6'-3"	A2	19	21	24	25	5'-11"	A2	19	21	23	25	5'-7"	A2	19	21	23	24	5'-4"	A2	19	21	23	25	5'-1"	A2	20	21	24	25
Double 3"x8"	N25	10'-2"	C	22	24	27	28	9'-9"	C	22	24	26	28	9'-4"	D	22	23	26	28	8'-11"	D	23	23	26	27	8'-6"	D	23	23	25	27	8'-2"	D	23	23	25	27
Double 2"x6.625"	N25	9'-3"	A3	21	22	25	26	8'-10"	B	21	22	24	26	8'-5"	C	22	22	24	26	8'-1"	C	22	22	24	25	7'-9"	C	22	21	24	25	7'-5"	C	22	21	24	25
5.5" Extruded Fascia	L	8'-8"	A3	21	21	23	25	8'-4"	A3	21	21	23	24	7'-11"	A3	21	20	23	24	7'-6"	B	21	21	23	24	7'-3"	C	22	21	23	25	6'-11"	C	22	21	24	25
California Fascia	N10, G	7'-5"	A2	20	19	22	23	7'-1"	A2	20	20	22	23	6'-8"	A2	20	20	23	24	6'-4"	A3	20	21	23	24	6'-1"	A3	20	21	23	25	5'-10"	A3	21	21	24	25
Classic Fascia	H	11'-8"	D	23	23	25	27	11'-4"	D	23	23	25	27	11'-1"	E	24	23	25	26	10'-9"	E	24	22	25	26	10'-7"	E	24	22	25	26	10'-4"	E	25	22	25	26
16 G Steel C	N9, T	10'-6"	C	22	24	27	28	9'-11"	C	22	24	26	28	9'-4"	D	22	23	26	28	8'-7"	C	22	23	26	27	8'-0"	C	22	23	25	27	7'-6"	C	22	22	25	26
14 G Steel C	N9, T	12'-11"	E	24	26	28	30	12'-3"	E	24	25	28	30	11'-7"	E	24	25	28	29	10'-11"	E	24	24	27	29	10'-5"	E	24	24	27	28	9'-11"	E	25	24	26	28
12 G Steel C	N9, T	19'-8"	G	27	28	31	33	18'-9"	G	28	28	31	33	17'-10"	G	28	28	31	32	17'-0"	G	28	27	30	32	16'-3"	G	28	27	30	32	15'-7"	G	28	27	30	31
Double 16 G Steel C	N9, N25, T	20'-10"	G	28	29	32	34	20'-0"	G	28	29	32	33	19'-2"	G	28	28	31	33	18'-5"	G	29	28	31	33	17'-9"	H1	29	28	31	32	17'-1"	H1	29	27	30	32
Double 14 G Steel C	N9, N25, T	22'-9"	G	29	29	33	35	22'-2"	H1	29	29	32	34	21'-7"	H1	30	29	32	34	21'-1"	H1	30	29	32	34	20'-7"	H1	31	29	32	34	20'-0"	H1	31	29	32	33
Double 12 G Steel C	N9, N25, T	27'-3"	H1	30	31	34	36	26'-6"	H1	31	31	34	36	25'-10"	H1	31	30	34	36	25'-2"	H1	32	30	34	35	24'-8"	H2	32	30	33	35	24'-1"	H2	33	30	33	35
Steel Cloverleaf	W	6'-5"	A1	19	19	22	23	6'-1"	A1	19	20	22	23	5'-9"	A2	19	20	23	24	5'-6"	A2	19	21	23	24	5'-3"	A2	19	21	23	25	5'-0"	A2	20	21	24	25
DBL Steel Cloverleaf	AA	10'-7"	C	22	19	22	23	10'-3"	D	23	20	22	23	10'-0"	D	23	20	23	24	9'-9"	D	23	21	23	24	9'-6"	E	24	21	23	25	9'-2"	E	24	21	24	25
4x3 I Beam	Y	8'-7"	A3	21	19	22	23	8'-3"	A3	21	20	22	23	7'-11"	A3	21	20	23	24	7'-8"	C	21	21	23	24	7'-3"	C	22	21	23	25	6'-11"	C	22	21	24	25
7x4 I Beam	Q	14'-5"	E	24	25	28	30	13'-8"	E	25	25	28	29	12'-10"	E	25	25	27	29	12'-2"	E	25	24	27	29	11'-6"	E	25	24	27	28	11'-0"	E	25	24	26	28

Header	Detail	trib 8.5'	Min Post Type	Uplift Footing (in)	8'	12'	15'	trib 9'	Min Post Type	Uplift Footing (in)	8'	12'	15'	trib 10'	Min Post Type	Uplift Footing (in)	8'	12'	15'	trib 10.5'	Min Post Type	Uplift Footing (in)	8'	12'	15'	trib 11'	Min Post Type	Uplift Footing (in)	8'	12'	15'
On Slab	On Slab	n/a	A1					n/a	A1					n/a	A1					n/a	A1					n/a	A1				
0.042"x3"x8"	N30	4'-10"	A2	20	22	24	26	4'-7"	A2	20	22	24	26	4'-3"	A2	20	23	25	27	4'-1"	A2	20	23	25	27	3'-11"	A2	20	23	26	27
Double 3"x8"	N25	7'-10"	D	23	22	25	26	7'-7"	D	23	22	25	26	7'-0"	E	24	23	25	27	6'-10"	E	24	23	25	27	6'-7"	E	24	23	26	27
Double 2"x6.625"	N25	7'-2"	D	22	22	24	26	6'-11"	D	23	22	24	26	6'-6"	D	23	23	25	27	6'-4"	D	23	23	25	27	6'-1"	D	23	23	26	27
5.5" Extruded Fascia	L	6'-8"	C	22	22	24	26	6'-5"	C	22	22	24	26	6'-0"	C	22	23	25	27	5'-10"	D	22	23	25	27	5'-8"	D	23	23	26	27
California Fascia	N10, G	5'-7"	A3	21	22	24	26	5'-4"	A3	21	22	24	26	4'-11"	A3	21	23	25	27	4'-9"	A3	21	23	25	27	4'-7"	A3	21	23	26	27
Classic Fascia	H	10'-1"	E	25	22	24	26	9'-11"	E	25	22	24	26	9'-7"	F	26	23	25	27	9'-5"	F	26	23	25	27	9'-3"	F	27	23	26	27
16 G Steel C	N9, T	7'-1"	C	22	22	24	26	6'-8"	C	22	22	24	26	6'-0"	C	22	23	25	27	5'-9"	C	22	23	25	27	5'-5"	C	22	23	26	27
14 G Steel C	N9, T	9'-6"	E	25	24	26	28	9'-0"	E	25	23	26	27	8'-1"	E	25	23	25	27	7'-9"	E	25	23	25	27	7'-4"	E	25	23	26	27
12 G Steel C	N9, T	14'-11"	G	29	26	29	31	14'-4"	H1	29	26	29	31	13'-4"	H1	29	26	29	30	12'-11"	H1	29	26	28	30	12'-6"	H1	29	25	28	30
Double 16 G Steel C	N9, N25, T	16'-6"	H1	30	27	30	32	16'-0"	H1	30	27	30	32	15'-1"	H1	30	27	29	31	14'-8"	H1	31	26	29	31	14'-3"	H1	31	26	29	31
Double 14 G Steel C	N9, N25, T	19'-4"	H1	31	28	31	33	18'-9"	H1	32	28	31	33	17'-9"	H1	32	28	31	32	17'-4"	H2	32	27	30	32	16'-11"	H2	33	27	30	32
Double 12 G Steel C	N9, N25, T	23'-8"	H2	33	30	33	35	23'-2"	H2	34	30	33	35	22'-5"	H3	35	29	33	34	22'-0"	H3	35	29	32	34	21'-8"	H3	35	29	32	34
Steel Cloverleaf	W	4'-9"	A2	20	22	24	26	4'-7"	A2	20	22	24	26	4'-3"	A2	20	23	25	27	4'-1"	A2	20	23	25	27	4'-0"	A2	20	23	26	27
DBL Steel Cloverleaf	AA	8'-11"	E	24	22	24	26	8'-8"	E	24	22	24	26	8'-2"	E	25	23	25	27	8'-0"	E	25	23	25	27	7'-10"	E	25	23	26	27
4x3 I Beam	Y	6'-7"	C	22	22	24	26	6'-4"	C	22	22	24	26	5'-9"	C	22	23	25	27	5'-7"	C	22	23	25	27	5'-4"	C	22	23	26	27
7x4 I Beam	Q	10'-6"	E	25	23	26	27	10'-0"	E	26	23	26	27	9'-2"	E	26	23	25	27	8'-10"	E	26	23	25	27	8'-6"	F	26	23	26	27

Header	Detail	trib 11.5'	Min Post Type	Uplift Footing (in)	8'	12'	15'	trib 12'	Min Post Type	Uplift Footing (in)	8'	12'	15'	trib 13'	Min Post Type	Uplift Footing (in)	8'	12'	15'	trib 14'	Min Post Type	Uplift Footing (in)	8'	12'	15'	trib 15'	Min Post Type	Uplift Footing (in)	8'	12'	15'
On Slab	On Slab	n/a	A1					n/a	A1					n/a	A1					n/a	A1					n/a	A1				
0.042"x3"x8"	N30	3'-9"	A2	20	23	26	28	3'-8"	A3	20	24	26	28	3'-5"	A3	20	24	27	28	3'-3"	A3	20	25	27	29	3'-0"	A3	20	25	28	29
Double 3"x8"	N25	6'-5"	E	24	23	26	28	6'-3"	E	24	24	26	28	5'-11"	E	24	24	27	28	5'-7"	E	24	25	27	29	5'-4"	E	25	25	28	29
Double 2"x6.625"	N25	5'-11"	D	23	23	26	28	5'-10"	D	23	24	26	28	5'-6"	E	24	24	27	28	5'-3"	E	24	25	27	29	5'-0"	E	24	25	28	29
5.5" Extruded Fascia	L	5'-6"	D	23	23	26	28	5'-4"	D	23	24	26	28	5'-1"	D	23	24	27	28	4'-9"	D	23	25	27	29	4'-7"	D	23	25	28	29
California Fascia	N10, G	4'-6"	A3	21	23	26	28	4'-4"	B	21	24	26	28	4'-1"	C	21	24	27	28	3'-10"	C	22	25	27	29	3'-8"	C	22	25	28	29
Classic Fascia	H	9'-2"	G	27	23	26	28	9'-0"	G	27	24	26	28	8'-9"	G	28	24	27	28	8'-6"	G	28	25	27	29	8'-2"	G	28	25	28	29
16 G Steel C	N9, T	5'-2"	C	22	23	26	28	5'-0"	D	22	24	26	28	4'-8"	D	22	24	27	28	4'-3"	C	22	25	27	29	4'-0"	C	22	25	28	29
14 G Steel C	N9, T	7'-1"	E	25	23	26	28	6'-10"	E	25	24	26	28	6'-3"	E	25	24	27	28	5'-10"	E	25	25	27	29	5'-5"	E	25	25	28	29
12 G Steel C	N9, T	12'-2"	H1	30	25	28	29	11'-10"	H1	30	25	28	29	11'-2"	H1	30	25	27	29	10'-7"	H1	30	25	27	29	10'-1"	H1	30	25	28	29
Double 16 G Steel C	N9, N25, T	13'-11"	H1	31	26	29	31	13'-8"	H1	31	26	29	30	13'-0"	H1	32	26	28	30	12'-5"	H1	32	25	28	30	11'-11"	H1	32	25	28	29
Double 14 G Steel C	N9, N25, T	16'-6"	H2	33	27	30	32	16'-2"	H2	33	27	30	32	15'-6"	H2	33	27	30	31	14'-10"	H2	34	26	29	31	14'-3"	H2	34	26	29	31
Double 12 G Steel C	N9, N25, T	21'-5"	H3	36	29	32	34	21'-1"	H3	36	29	32	34	20'-6"	H4	37	29	32	34	20'-0"	H4	37	29	32	33	19'-5"	H4	38	28	32	33
Steel Cloverleaf	W	3'-10"	A3	20	23	26	28	3'-9"	A3	20	24	26	28	3'-6"	A3	20	24	27	28	3'-4"	A3	21	25	27	29	3'-2"	A3	21	25	28	29
DBL Steel Cloverleaf	AA	7'-7"	E	25	23	26	28	7'-6"	E	26	24	26	28	7'-2"	E	26	24	27	28	6'-11"	F	26	25	27	29	6'-8"	F	26	25	28	29
4x3 I Beam	Y	5'-2"	C	22	23	26	28	5'-0"	C	22	24	26	28	4'-8"	D	22	24	27	28	4'-5"	D	23	25	27	29	4'-2"	D	23	25	28	29
7x4 I Beam	Q	8'-2"	F	26	23	26	28	7'-11"	F	26	24	26	28	7'-5"	F	26	24	27	28	7'-0"	F	26	25	27	29	6'-7"	F	26	25	28	29

Amerimax Exterior Home Products
28921 US Hwy 74
Romoland, CA 92585

Carl Putnam, P. E.
3441 Ivylink Place
Lynchburg, VA 24503
carlputnam@comcast.net

Registered Professional Engineer (Civil)
CERTIFICATE NO. 39702
CARL PUTNAM
Date Signed
ARIZONA U.S.A.
Expires 09/30/2024

JAN 20 2023

SECTION 5.0 POST SPACING, POST TYPE AND FOOTING SIZE FOR SOLID COVERS

Roof Solidity: 100%

Ground Snow Load: 20 psf **Live Load: 20 psf** **Wind Speed: 100 MPH EXPOSURE B** **Seismic Ss= 150%** **Seismic Design Category D** **Structures are Attached to Existing Building**

Table 5.14a (cubic footing "d"; Constrained Footing (in) by Max Post Length 8', 12', 15')

Header	Detail	trib 3'	Min Post Type	Uplift Footing (in)	8'	12'	15'	trib 3.5'	Min Post Type	Uplift Footing (in)	8'	12'	15'	trib 4'	Min Post Type	Uplift Footing (in)	8'	12'	15'	trib 4.5'	Min Post Type	Uplift Footing (in)	8'	12'	15'
On Slab	On Slab	11'-10"	A1					10'-2"	A1					8'-11"	A1					7'-11"	A1				
0.042"x3"x8"	N30	9'-10"	A1	18	16	18	19	8'-11"	A1	19	17	19	20	8'-2"	A1	19	17	19	21	7'-7"	A1	19	18	20	21
Double 3"x8"	N25	14'-8"	A2	21	18	19	21	13'-5"	A3	22	18	20	21	12'-5"	A3	22	18	20	21	11'-7"	A3	22	18	20	22
Double 2"x6.625"	N25	13'-1"	A2	20	17	19	20	12'-0"	A2	21	17	19	20	11'-2"	A2	21	18	20	21	10'-5"	A3	22	18	20	21
5.5" Extruded Fascia	L	11'-10"	A1	20	17	18	19	11'-3"	A2	20	17	19	20	10'-7"	A2	21	17	19	21	9'-11"	A2	21	18	20	21
California Fascia	N10, G	11'-0"	A1	19	16	18	19	10'-0"	A1	20	17	19	20	9'-2"	A1	20	17	19	21	8'-6"	A2	20	18	20	21
Classic Fascia	H	14'-3"	A2	21	17	19	20	13'-6"	A3	22	18	20	21	13'-0"	A3	22	18	20	21	12'-6"	C	23	19	21	22
16 G Steel C	N9, T	16'-5"	A3	22	18	20	21	14'-9"	A3	22	18	20	21	13'-5"	B	23	18	20	22	12'-4"	C	23	19	21	22
14 G Steel C	N9, T	19'-10"	C	23	19	21	22	17'-10"	D	24	19	21	23	16'-4"	D	24	19	22	23	15'-0"	D	24	20	22	23
12 G Steel C	N9, T	26'-4"	E	26	20	23	24	25'-1"	E	27	21	23	25	24'-0"	F	27	21	24	25	22'-7"	F	28	22	24	26
Double 16 G Steel C	N9, N25, T	25'-5"	E	25	20	22	24	24'-2"	E	26	21	23	24	23'-2"	E	27	21	24	25	22'-4"	F	28	22	24	25
Double 14 G Steel C	N9, N25, T	27'-9"	E	26	21	23	24	26'-5"	E	27	21	24	25	25'-3"	F	28	22	24	25	24'-4"	G	29	22	25	26
Double 12 G Steel C	N9, N25, T	33'-3"	F	28	22	24	25	31'-7"	G	29	22	25	26	30'-3"	G	30	23	25	27	29'-2"	G	30	23	26	27
Steel Cloverleaf	W	9'-7"	A1	18	16	18	19	8'-8"	A1	19	17	19	20	8'-0"	A1	19	17	19	21	7'-5"	A1	19	18	20	21
DBL Steel Cloverleaf	AA	12'-10"	A2	20	17	19	20	12'-3"	A2	21	17	19	20	11'-8"	A3	22	18	20	21	11'-3"	A3	22	18	20	21
4x3 I Beam	Y	11'-9"	A1	20	17	18	19	10'-11"	A2	20	17	19	20	10'-2"	A2	21	17	19	21	9'-7"	A2	21	18	20	21
7x4 I Beam	Q	16'-9"	A3	22	18	20	21	16'-1"	C	23	19	21	22	15'-6"	D	24	19	21	22	15'-3"	D	24	20	22	23

Header	Detail	trib 5'	Min Post Type	Uplift Footing (in)	8'	12'	15'	trib 5.5'	Min Post Type	Uplift Footing (in)	8'	12'	15'	trib 6'	Min Post Type	Uplift Footing (in)	8'	12'	15'	trib 6.5'	Min Post Type	Uplift Footing (in)	8'	12'	15'
On Slab	On Slab	7'-1"	A1					6'-5"	A1					5'-11"	A1					5'-5"	A1				
0.042"x3"x8"	N30	7'-1"	A1	20	19	21	22	6'-8"	A1	20	19	21	22	6'-4"	A2	20	19	22	23	5'-11"	A2	20	20	22	23
Double 3"x8"	N25	10'-11"	C	23	19	21	22	10'-5"	C	23	19	21	22	9'-10"	C	23	19	22	23	9'-4"	C	24	20	22	23
Double 2"x6.625"	N25	9'-10"	A3	22	19	21	22	9'-5"	A3	22	19	21	22	8'-11"	B	23	19	22	23	8'-6"	C	23	20	22	23
5.5" Extruded Fascia	L	9'-3"	A3	21	19	21	22	8'-10"	A3	22	19	21	22	8'-4"	A3	22	19	22	23	8'-0"	A3	22	20	22	23
California Fascia	N10, G	7'-11"	A2	20	19	21	22	7'-7"	A2	21	19	21	22	7'-1"	A2	21	19	22	23	6'-9"	A2	21	20	22	23
Classic Fascia	H	12'-1"	C	23	19	21	22	11'-8"	D	24	19	21	23	11'-4"	D	24	20	22	23	11'-1"	E	25	20	22	23
16 G Steel C	N9, T	11'-5"	C	23	19	21	22	10'-9"	C	23	19	21	22	10'-1"	C	23	19	22	23	9'-5"	C	24	20	22	23
14 G Steel C	N9, T	13'-11"	D	25	20	22	23	13'-2"	E	25	20	22	23	12'-5"	E	25	20	22	24	11'-8"	E	25	20	22	24
12 G Steel C	N9, T	21'-2"	G	28	22	24	26	20'-1"	G	29	22	25	26	19'-0"	G	29	22	25	26	18'-0"	G	29	23	25	26
Double 16 G Steel C	N9, N25, T	21'-7"	G	28	22	24	26	20'-11"	G	29	22	25	26	20'-2"	G	30	23	25	27	19'-4"	G	30	23	25	27
Double 14 G Steel C	N9, N25, T	23'-6"	G	29	23	25	26	22'-9"	G	30	23	25	27	22'-2"	H1	30	23	26	27	21'-7"	H1	31	24	26	28
Double 12 G Steel C	N9, N25, T	28'-2"	H1	31	24	26	28	27'-3"	H1	32	24	27	28	26'-6"	H1	32	24	27	29	25'-10"	H1	33	25	27	29
Steel Cloverleaf	W	6'-11"	A1	19	19	21	22	6'-6"	A1	20	19	21	22	6'-2"	A1	20	19	22	23	5'-10"	A2	20	20	22	23
DBL Steel Cloverleaf	AA	10'-11"	B	23	19	21	22	10'-7"	C	23	19	21	22	10'-3"	C	24	19	22	23	10'-0"	D	24	20	22	23
4x3 I Beam	Y	9'-1"	A3	21	19	21	22	8'-8"	A3	22	19	21	22	8'-4"	A3	22	19	22	23	8'-0"	A3	22	20	22	23
7x4 I Beam	Q	14'-9"	E	25	20	22	24	14'-5"	E	26	20	23	24	13'-10"	E	26	21	23	24	13'-0"	E	26	21	23	24

Header	Detail	trib 7'	Min Post Type	Uplift Footing (in)	8'	12'	15'	trib 7.5'	Min Post Type	Uplift Footing (in)	8'	12'	15'	trib 8'	Min Post Type	Uplift Footing (in)	8'	12'	15'
On Slab	On Slab	5'-1"	A1					4'-9"	A1					4'-5"	A1				
0.042"x3"x8"	N30	5'-8"	A2	20	20	22	24	5'-4"	A2	20	21	23	24	5'-2"	A2	21	21	23	25
Double 3"x8"	N25	8'-11"	D	24	20	22	24	8'-7"	D	24	21	23	24	8'-3"	D	24	21	23	25
Double 2"x6.625"	N25	8'-2"	C	23	20	22	24	7'-10"	C	23	21	23	24	7'-7"	C	23	21	23	25
5.5" Extruded Fascia	L	7'-7"	A3	23	20	22	24	7'-3"	C	23	21	23	24	7'-0"	C	23	21	23	25
California Fascia	N10, G	6'-5"	A3	21	20	22	24	6'-1"	A3	21	21	23	24	5'-11"	A3	22	21	23	25
Classic Fascia	H	10'-9"	E	25	20	22	24	10'-7"	E	26	21	23	24	10'-4"	E	26	21	23	25
16 G Steel C	N9, T	8'-9"	C	24	20	22	24	8'-2"	C	24	21	23	24	7'-8"	C	24	21	23	25
14 G Steel C	N9, T	11'-1"	E	25	20	22	24	10'-6"	E	26	21	23	24	10'-1"	E	26	21	23	25
12 G Steel C	N9, T	17'-1"	G	29	23	25	27	16'-4"	G	30	23	25	27	15'-9"	G	30	23	25	27
Double 16 G Steel C	N9, N25, T	18'-6"	G	30	23	26	27	17'-10"	H1	31	23	26	27	17'-4"	H1	31	24	26	28
Double 14 G Steel C	N9, N25, T	21'-1"	H1	32	24	26	28	20'-7"	H1	32	24	27	28	20'-2"	H1	33	24	27	29
Double 12 G Steel C	N9, N25, T	25'-2"	H1	34	25	28	29	24'-8"	H2	34	25	28	30	24'-1"	H2	35	26	28	30
Steel Cloverleaf	W	5'-6"	A2	20	20	22	24	5'-3"	A2	20	21	23	24	5'-1"	A2	21	21	23	25
DBL Steel Cloverleaf	AA	9'-9"	D	24	20	22	24	9'-6"	D	25	21	23	24	9'-3"	E	25	21	23	25
4x3 I Beam	Y	7'-8"	B	23	20	22	24	7'-4"	C	23	21	23	24	7'-0"	C	23	21	23	25
7x4 I Beam	Q	12'-3"	E	26	21	23	24	11'-8"	E	27	21	23	25	11'-2"	E	27	21	23	25

Header	Detail	trib 8.5'	Min Post Type	Uplift Footing (in)	8'	12'	15'	trib 9'	Min Post Type	Uplift Footing (in)	8'	12'	15'	trib 10'	Min Post Type	Uplift Footing (in)	8'	12'	15'	trib 10.5'	Min Post Type	Uplift Footing (in)	8'	12'	15'
On Slab	On Slab	4'-2"	A1					3'-11"	A1					3'-6"	A1					3'-4"	A1				
0.042"x3"x8"	N30	4'-11"	A2	21	21	24	25	4'-8"	A2	21	22	24	25	4'-4"	A2	21	22	25	26	4'-2"	A2	21	22	25	26
Double 3"x8"	N25	7'-11"	D	24	21	24	25	7'-8"	D	25	22	24	25	7'-1"	D	25	22	25	26	6'-11"	E	25	22	25	26
Double 2"x6.625"	N25	7'-3"	D	24	21	24	25	7'-0"	D	24	22	24	25	6'-7"	D	24	22	25	26	6'-5"	D	24	22	25	26
5.5" Extruded Fascia	L	6'-9"	C	23	21	24	25	6'-6"	C	23	22	24	25	6'-1"	C	24	22	25	26	5'-11"	D	24	22	25	26
California Fascia	N10, G	5'-8"	A3	22	21	24	25	5'-5"	A3	22	22	24	25	5'-0"	A3	22	22	25	26	4'-10"	A3	22	22	25	26
Classic Fascia	H	10'-1"	E	26	21	24	25	9'-11"	E	27	22	24	25	9'-7"	F	27	22	25	26	9'-5"	F	28	22	25	26
16 G Steel C	N9, T	7'-3"	C	24	21	24	25	6'-10"	C	24	22	24	25	6'-1"	C	24	22	25	26	5'-10"	D	24	22	25	26
14 G Steel C	N9, T	9'-7"	E	26	21	24	25	9'-2"	E	26	22	24	25	8'-3"	E	26	22	25	26	7'-11"	E	26	22	25	26
12 G Steel C	N9, T	15'-1"	G	30	23	26	27	14'-7"	G	30	23	26	27	13'-6"	H1	31	23	26	27	13'-2"	H1	31	23	26	28
Double 16 G Steel C	N9, N25, T	16'-8"	H1	31	24	26	28	16'-2"	H1	31	24	26	28	15'-3"	H1	32	24	27	28	14'-10"	H1	32	24	27	28
Double 14 G Steel C	N9, N25, T	19'-7"	H1	33	25	27	29	19'-0"	H1	33	25	27	29	17'-11"	H1	34	25	28	29	17'-6"	H1	34	25	28	30
Double 12 G Steel C	N9, N25, T	23'-8"	H2	35	26	29	30	23'-2"	H2	35	26	29	31	22'-5"	H3	36	27	29	31	22'-0"	H3	37	27	30	31
Steel Cloverleaf	W	4'-10"	A2	21	21	24	25	4'-8"	A2	21	22	24	25	4'-4"	A2	21	22	25	26	4'-2"	A2	21	22	25	26
DBL Steel Cloverleaf	AA	9'-0"	E	25	21	24	25	8'-9"	E	26	22	24	25	8'-3"	E	26	22	25	26	8'-1"	E	26	22	25	26
4x3 I Beam	Y	6'-8"	C	23	21	24	25	6'-5"	C	23	22	24	25	5'-10"	C	23	22	25	26	5'-8"	C	23	22	25	26
7x4 I Beam	Q	10'-8"	E	27	21	24	25	10'-2"	E	27	22	24	25	9'-4"	E	27	22	25	26	9'-0"	E	27	22	25	26

Header	Detail	trib 11'	Min Post Type	Uplift Footing (in)	8'	12'	15'	trib 11.5'	Min Post Type	Uplift Footing (in)	8'	12'	15'	trib 12'	Min Post Type	Uplift Footing (in)	8'	12'	15'
On Slab	On Slab	3'-2"	A1					3'-1"	A1					2'-11"	A1				
0.042"x3"x8"	N30	4'-0"	A2	21	23	25	27	3'-10"	A2	21	23	25	27	3'-9"	A3	21	23	26	27
Double 3"x8"	N25	6'-8"	E	25	23	25	27	6'-6"	E	25	23	25	27	6'-4"	E	25	23	26	27
Double 2"x6.625"	N25	6'-3"	D	24	23	25	27	6'-0"	D	25	23	25	27	5'-10"	D	25	23	26	27
5.5" Extruded Fascia	L	5'-9"	D	24	23	25	27	5'-7"	D	24	23	25	27	5'-5"	D	24	23	26	27
California Fascia	N10, G	4'-8"	A3	22	23	25	27	4'-6"	A3	22	23	25	27	4'-5"	A3	22	23	26	27
Classic Fascia	H	9'-3"	F	28	23	25	27	9'-2"	G	28	23	25	27	9'-0"	G	29	23	26	27
16 G Steel C	N9, T	5'-7"	C	24	23	25	27	5'-4"	C	24	23	25	27	5'-1"	C	24	23	26	27
14 G Steel C	N9, T	7'-7"	E	26	23	25	27	7'-2"	E	26	23	25	27	6'-11"	E	26	23	26	27
12 G Steel C	N9, T	12'-9"	H1	31	24	26	28	12'-4"	H1	31	24	26	28	12'-0"	H1	31	24	26	28
Double 16 G Steel C	N9, N25, T	14'-6"	H1	32	24	27	29	14'-1"	H1	33	24	27	29	13'-9"	H1	33	25	27	29
Double 14 G Steel C	N9, N25, T	17'-1"	H2	34	25	28	30	16'-8"	H2	34	26	28	30	16'-4"	H2	35	26	28	30
Double 12 G Steel C	N9, N25, T	21'-8"	H3	37	27	30	32	21'-5"	H3	37	27	30	32	21'-1"	H3	38	27	30	32
Steel Cloverleaf	W	4'-0"	A2	21	23	25	27	3'-11"	A3	21	23	25	27	3'-9"	A3	21	23	26	27
DBL Steel Cloverleaf	AA	7'-11"	E	26	23	25	27	7'-8"	E	27	23	25	27	7'-6"	E	27	23	26	27
4x3 I Beam	Y	5'-5"	C	23	23	25	27	5'-3"	C	23	23	25	27	5'-1"	C	24	23	26	27
7x4 I Beam	Q	8'-8"	F	27	23	25	27	8'-4"	F	27	23	25	27	8'-1"	F	27	23	26	27

Header	Detail	trib 13'	Min Post Type	Uplift Footing (in)	8'	12'	15'	trib 14'	Min Post Type	Uplift Footing (in)	8'	12'	15'	trib 15'	Min Post Type	Uplift Footing (in)	8'	12'	15'
On Slab	On Slab	2'-8"	A1					2'-6"	A1					2'-4"	A1				
0.042"x3"x8"	N30	3'-6"	A3	21	24	26	28	3'-3"	A3	21	24	27	28	3'-1"	A3	22	25	27	29
Double 3"x8"	N25	6'-0"	E	26	24	26	28	5'-8"	E	26	24	27	28	5'-4"	E	26	25	27	29
Double 2"x6.625"	N25	5'-7"	E	25	24	26	28	5'-4"	E	25	24	27	28	5'-1"	E	25	25	27	29
5.5" Extruded Fascia	L	5'-1"	D	24	24	26	28	4'-10"	D	24	24	27	28	4'-7"	D	25	25	27	29
California Fascia	N10, G	4'-2"	B	23	24	26	28	3'-11"	C	23	24	27	28	3'-8"	C	23	25	27	29
Classic Fascia	H	8'-9"	G	29	24	26	28	8'-7"	G	29	24	27	28	8'-3"	G	30	25	27	29
16 G Steel C	N9, T	4'-9"	D	24	24	26	28	4'-4"	C	24	24	27	28	4'-1"	C	24	25	27	29
14 G Steel C	N9, T	6'-5"	E	26	24	26	28	5'-11"	E	26	24	27	28	5'-6"	E	26	25	27	29
12 G Steel C	N9, T	11'-4"	H1	32	24	26	28	10'-9"	H1	32	24	27	28	10'-3"	H1	32	25	27	29
Double 16 G Steel C	N9, N25, T	13'-2"	H1	33	25	28	29	12'-7"	H1	34	25	28	29	12'-1"	H1	34	25	28	30
Double 14 G Steel C	N9, N25, T	15'-8"	H2	35	26	29	30	15'-0"	H2	36	26	29	31	14'-4"	H2	36	26	29	31
Double 12 G Steel C	N9, N25, T	20'-6"	H4	38	28	31	33	20'-0"	H4	39	28	31	33	19'-7"	H4	40	28	32	33
Steel Cloverleaf	W	3'-7"	A3	22	24	26	28	3'-4"	A3	22	24	27	28	3'-2"	A3	22	25	27	29
DBL Steel Cloverleaf	AA	7'-3"	E	27	24	26	28	7'-0"	F	28	24	27	28	6'-9"	F	28	25	27	29
4x3 I Beam	Y	4'-9"	D	24	24	26	28	4'-5"	D	24	24	27	28	4'-2"	D	24	25	27	29
7x4 I Beam	Q	7'-7"	F	28	24	26	28	7'-1"	F	28	24	27	28	6'-8"	F	28	25	27	29

Ground Snow Load: 20 psf **Live Load: 20 psf** **Wind Speed: 100 MPH EXPOSURE B** **Seismic Ss= 150%** **Seismic Design Category D** **Freestanding Structures**

Table 5.14b (cubic footing "d"; Constrained Footing (in) by Max Post Length 8', 12', 15')

Header	Detail	trib 3'	Min Post Type	Uplift Footing (in)	8'	12'	15'	trib 3.5'	Min Post Type	Uplift Footing (in)	8'	12'	15'	trib 4'	Min Post Type	Uplift Footing (in)	8'	12'	15'	trib 4.5'	Min Post Type	Uplift Footing (in)	8'	12'	15'
On Slab	On Slab	n/a	A1					n/a	A1					n/a	A1					n/a	A1				
0.042"x3"x8"	N30	9'-10"	A1	17	22	24	26	8'-11"	A1	18	22	24	25	8'-2"	A1	18	21	23	25	7'-7"	A1	18	21	23	24
Double 3"x8"	N25	14'-8"	A2	20	24	27	29	13'-5"	A3	20	24	27	28	12'-5"	A3	21	23	26	28	11'-7"	A3	21	23	26	27
Double 2"x6.625"	N25	13'-1"	A2	19	23	25	27	12'-0"	A2	19	22	25	26	11'-2"	A2	20	22	24	25	10'-5"	A3	20	21	24	25
5.5" Extruded Fascia	L	11'-10"	A1	18	21	23	25	11'-3"	A2	19	21	23	24	10'-7"	A2	19	20	23	24	9'-11"	A2	20	20	22	24
California Fascia	N10, G	11'-0"	A1	18	20	22	23	10'-0"	A1	18	19	21	23	9'-2"	A1	19	19	21	22	8'-6"	A2	19	19	21	22
Classic Fascia	H	14'-3"	A2	19	22	25	26	13'-6"	A3	20	22	24	26	13'-0"	A3	21	22	24	26	12'-6"	C	21	22	24	25
16 G Steel C	N9, T	16'-5"	A3	20	25	28	30	14'-9"	A3	21	24	27	29	13'-5"	B	21	24	26	28	12'-4"	C	21	23	26	27
14 G Steel C	N9, T	19'-10"	C	22	26	29	31	17'-10"	D	22	26	28	30	16'-4"	D	22	25	28	29	15'-0"	D	23	25	27	29
12 G Steel C	N9, T	26'-4"	E	24	28	31	33	25'-1"	E	25	28	31	33	24'-0"	F	26	28	31	32	22'-7"	F	26	27	30	32
Double 16 G Steel C	N9, N25, T	25'-5"	E	24	28	31	33	24'-2"	E	24	28	31	33	23'-2"	E	25	27	30	32	22'-4"	F	26	27	30	32
Double 14 G Steel C	N9, N25, T	27'-9"	E	24	29	32	34	26'-5"	E	25	28	31	33	25'-3"	F	26	28	31	33	24'-4"	G	27	28	31	33
Double 12 G Steel C	N9, N25, T	33'-3"	F	26	30	33	35	31'-7"	G	27	30	33	35	30'-3"	G	28	29	33	34	29'-2"	G	28	29	32	34
Steel Cloverleaf	W	9'-7"	A1	17	17	19	20	8'-8"	A1	17	17	18	20	8'-0"	A1	18	17	18	20	7'-5"	A1	18	17	19	20
DBL Steel Cloverleaf	AA	12'-10"	A2	19	18	20	22	12'-3"	A2	20	18	20	21	11'-8"	A3	20	18	20	21	11'-3"	A3	21	18	20	21
4x3 I Beam	Y	11'-9"	A1	18	19	21	23	10'-11"	A2	19	19	21	22	10'-2"	A2	19	19	21	22	9'-7"	A2	20	18	20	22
7x4 I Beam	Q	17'-7"	A3	21	25	27	29	17'-0"	C	22	25	27	29	16'-4"	D	22	24	27	28	15'-11"	D	23	24	27	28

Header	Detail	trib 5'	Min Post Type	Uplift Footing (in)	8'	12'	15'	trib 5.5'	Min Post Type	Uplift Footing (in)	8'	12'	15'	trib 6'	Min Post Type	Uplift Footing (in)	8'	12'	15'	trib 6.5'	Min Post Type	Uplift Footing (in)	8'	12'	15'
On Slab	On Slab	n/a	A1					n/a	A1					n/a	A1					n/a	A1				
0.042"x3"x8"	N30	7'-1"	A1	18	20	23	24	6'-8"	A1	19	20	22	24	6'-4"	A2	19	20	22	23	5'-11"	A2	19	19	22	23
Double 3"x8"	N25	10'-11"	C	21	23	25	27	10'-5"	C	21	22	25	26	9'-10"	C	22	22	24	26	9'-4"	C	22	22	24	26
Double 2"x6.625"	N25	9'-10"	A3	20	21	23	25	9'-5"	A3	21	21	23	24	8'-11"	B	21	21	23	24	8'-6"	C	21	20	22	24
5.5" Extruded Fascia	L	9'-3"	A3	20	20	22	23	8'-10"	A3	20	20	22	23	8'-4"	A3	21	19	21	23	8'-0"	A3	21	19	21	22
California Fascia	N10, G	7'-11"	A2	19	18	20	21	7'-7"	A2	19	18	20	21	7'-1"	A2	20	18	20	22	6'-9"	A2	20	19	21	22
Classic Fascia	H	12'-1"	C	22	21	24	25	11'-8"	D	22	21	24	25	11'-4"	D	23	21	23	25	11'-1"	E	23	21	23	25
16 G Steel C	N9, T	11'-5"	C	21	23	25	27	10'-9"	C	22	23	25	26	10'-1"	C	22	22	25	26	9'-5"	C	22	22	24	26
14 G Steel C	N9, T	13'-11"	D	23	24	27	28	13'-2"	E	23	24	26	28	12'-5"	E	23	23	26	27	11'-8"	E	24	23	26	27
12 G Steel C	N9, T	21'-2"	G	26	27	30	31	20'-1"	G	27	26	29	31	19'-0"	G	27	26	29	31	18'-0"	G	27	26	29	30
Double 16 G Steel C	N9, N25, T	21'-7"	G	27	27	30	32	20'-11"	G	27	27	30	31	20'-2"	G	28	26	29	31	19'-4"	G	28	26	29	31
Double 14 G Steel C	N9, N25, T	23'-6"	G	27	28	31	32	22'-9"	G	28	27	30	32	22'-2"	H1	28	27	30	32	21'-7"	H1	29	27	30	32
Double 12 G Steel C	N9, N25, T	28'-2"	H1	29	29	32	34	27'-3"	H1	30	29	32	34	26'-6"	H1	30	28	31	33	25'-10"	H1	31	28	31	33
Steel Cloverleaf	W	6'-11"	A1	18	18	20	21	6'-6"	A1	18	18	20	21	6'-2"	A1	19	18	20	22	5'-10"	A2	19	19	21	22
DBL Steel Cloverleaf	AA	10'-11"	B	21	19	21	22	10'-7"	C	22	19	21	22	10'-3"	C	22	19	21	22	10'-0"	D	22	19	21	23
4x3 I Beam	Y	9'-1"	A3	20	18	20	21	8'-8"	A3	20	18	20	21	8'-4"	A3	21	18	20	22	8'-0"	A3	21	19	21	22
7x4 I Beam	Q	15'-6"	E	24	24	27	28	14'-9"	E	24	24	26	28	13'-10"	E	24	23	26	27	13'-0"	E	24	23	25	27

Header	Detail	trib 7'	Min Post Type	Uplift Footing (in)	8'	12'	15'	trib 7.5'	Min Post Type	Uplift Footing (in)	8'	12'	15'	trib 8'	Min Post Type	Uplift Footing (in)	8'	12'	15'
On Slab	On Slab	n/a	A1					n/a	A1					n/a	A1				
0.042"x3"x8"	N30	5'-8"	A2	19	19	21	23	5'-4"	A2	19	20	22	23	5'-2"	A2	19	20	22	23
Double 3"x8"	N25	8'-11"	D	22	22	24	25	8'-7"	D	22	21	24	25	8'-3"	D	23	21	23	25
Double 2"x6.625"	N25	8'-2"	C	21	20	22	24	7'-10"	C	22	20	22	23	7'-7"	C	22	20	22	23
5.5" Extruded Fascia	L	7'-7"	A3	21	19	21	23	7'-3"	C	21	20	22	23	7'-0"	C	21	20	22	23
California Fascia	N10, G	6'-5"	A3	20	19	21	23	6'-1"	A3	20	20	22	23	5'-11"	A3	20	20	22	23
Classic Fascia	H	10'-9"	E	24	21	23	24	10'-7"	E	24	21	23	24	10'-4"	E	24	21	23	24
16 G Steel C	N9, T	8'-9"	C	22	21	24	25	8'-2"	C	22	21	23	25	7'-8"	C	22	21	23	24
14 G Steel C	N9, T	11'-1"	E	24	23	25	27	10'-6"	E	24	22	25	26	10'-1"	E	24	22	25	26
12 G Steel C	N9, T	17'-1"	G	27	25	28	30	16'-4"	G	28	25	28	29	15'-9"	G	28	25	28	29
Double 16 G Steel C	N9, N25, T	18'-6"	G	28	26	29	30	17'-10"	H1	29	26	28	30	17'-4"	H1	29	25	28	30
Double 14 G Steel C	N9, N25, T	21'-1"	H1	29	27	30	31	20'-7"	H1	30	27	30	31	20'-2"	H1	30	26	29	31
Double 12 G Steel C	N9, N25, T	25'-2"	H1	31	28	31	33	24'-8"	H2	32	28	31	33	24'-1"	H2	32	28	31	33
Steel Cloverleaf	W	5'-6"	A2	19	19	21	23	5'-3"	A2	19	20	22	23	5'-1"	A2	19	20	22	23
DBL Steel Cloverleaf	AA	9'-9"	D	23	20	22	23	9'-6"	D	23	20	22	23	9'-3"	E	23	20	22	24
4x3 I Beam	Y	7'-8"	B	21	19	21	23	7'-4"	C	21	20	22	23	7'-0"	C	21	20	22	23
7x4 I Beam	Q	12'-3"	E	25	23	25	26	11'-8"	E	25	22	25	26	11'-2"	E	25	22	24	26

Header	Detail	trib 8.5'	Min Post Type	Uplift Footing (in)	8'	12'	15'	trib 9'	Min Post Type	Uplift Footing (in)	8'	12'	15'	trib 10'	Min Post Type	Uplift Footing (in)	8'	12'	15'	trib 10.5'	Min Post Type	Uplift Footing (in)	8'	12'	15'
On Slab	On Slab	n/a	A1					n/a	A1					n/a	A1					n/a	A1				
0.042"x3"x8"	N30	4'-11"	A2	19	20	22	24	4'-8"	A2	19	20	23	24	4'-4"	A2	20	21	23	25	4'-2"	A2	20	21	24	25
Double 3"x8"	N25	7'-11"	D	23	21	23	25	7'-8"	D	23	21	23	24	7'-1"	D	23	21	23	25	6'-11"	E	23	21	24	25
Double 2"x6.625"	N25	7'-3"	D	22	20	22	24	7'-0"	D	22	20	23	24	6'-7"	D	23	21	23	25	6'-5"	D	23	21	24	25
5.5" Extruded Fascia	L	6'-9"	C	22	20	22	24	6'-6"	C	22	20	23	24	6'-1"	C	22	21	23	25	5'-11"	D	22	21	24	25
California Fascia	N10, G	5'-8"	A3	20	20	22	24	5'-5"	A3	20	20	23	24	5'-0"	A3	21	21	23	25	4'-10"	A3	21	21	24	25
Classic Fascia	H	10'-1"	E	25	21	23	24	9'-11"	E	25	21	23	25	9'-7"	F	26	21	24	25	9'-5"	F	26	22	24	25
16 G Steel C	N9, T	7'-3"	C	22	20	23	24	6'-10"	C	22	20	23	24	6'-1"	C	22	21	23	25	5'-10"	D	22	21	24	25
14 G Steel C	N9, T	9'-7"	E	24	22	24	26	9'-2"	E	24	22	24	25	8'-3"	E	24	21	23	25	7'-11"	E	24	21	24	25
12 G Steel C	N9, T	15'-1"	G	28	25	27	29	14'-7"	G	28	24	27	29	13'-6"	H1	29	24	27	28	13'-2"	H1	29	24	26	28
Double 16 G Steel C	N9, N25, T	16'-8"	H1	29	25	28	30	16'-2"	H1	29	25	28	29	15'-3"	H1	30	25	27	29	14'-10"	H1	30	25	27	29
Double 14 G Steel C	N9, N25, T	19'-7"	H1	31	26	29	31	19'-0"	H1	31	26	29	31	17'-11"	H1	31	26	29	30	17'-6"	H1	32	26	28	30
Double 12 G Steel C	N9, N25, T	23'-8"	H2	33	28	31	32	23'-2"	H2	33	27	30	32	22'-5"	H3	34	27	30	32	22'-0"	H3	34	27	30	32
Steel Cloverleaf	W	4'-10"	A2	19	20	22	24	4'-8"	A2	19	20	23	24	4'-4"	A2	20	21	23	25	4'-2"	A2	20	21	24	25
DBL Steel Cloverleaf	AA	9'-0"	E	24	20	22	24	8'-9"	E	24	20	23	24	8'-3"	E	24	21	23	25	8'-1"	E	25	21	24	25
4x3 I Beam	Y	6'-8"	C	21	20	22	24	6'-5"	C	22	20	23	24	5'-10"	C	22	21	23	25	5'-8"	C	22	21	24	25
7x4 I Beam	Q	10'-8"	E	25	22	24	26	10'-2"	E	25	22	24	25	9'-4"	E	25	21	24	25	9'-0"	E	25	21	24	25

Header	Detail	trib 11'	Min Post Type	Uplift Footing (in)	8'	12'	15'	trib 11.5'	Min Post Type	Uplift Footing (in)	8'	12'	15'	trib 12'	Min Post Type	Uplift Footing (in)	8'	12'	15'
On Slab	On Slab	n/a	A1					n/a	A1					n/a	A1				
0.042"x3"x8"	N30	4'-0"	A2	20	22	24	25	3'-10"	A2	20	22	24	26	3'-9"	A3	20	22	24	26
Double 3"x8"	N25	6'-8"	E	23	22	24	25	6'-6"	E	24	22	24	26	6'-4"	E	24	22	24	26
Double 2"x6.625"	N25	6'-3"	D	23	22	24	25	6'-0"	D	23	22	24	26	5'-10"	D	23	22	24	26
5.5" Extruded Fascia	L	5'-9"	D	22	22	24	25	5'-7"	D	22	22	24	26	5'-5"	D	22	22	24	26
California Fascia	N10, G	4'-8"	A3	21	22	24	25	4'-6"	A3	21	22	24	26	4'-5"	A3	21	22	24	26
Classic Fascia	H	9'-3"	F	26	22	24	26	9'-2"	G	26	22	24	26	9'-0"	G	27	22	24	26
16 G Steel C	N9, T	5'-7"	C	22	22	24	25	5'-4"	C	22	22	24	26	5'-1"	C	22	22	24	26
14 G Steel C	N9, T	7'-7"	E	24	22	24	25	7'-2"	E	24	22	24	26	6'-11"	E	24	22	24	26
12 G Steel C	N9, T	12'-9"	H1	29	24	26	28	12'-4"	H1	29	24	26	28	12'-0"	H1	29	24	26	28
Double 16 G Steel C	N9, N25, T	14'-6"	H1	30	24	27	29	14'-1"	H1	30	24	27	29	13'-9"	H1	31	25	27	29
Double 14 G Steel C	N9, N25, T	17'-1"	H2	32	25	28	30	16'-8"	H2	32	26	28	30	16'-4"	H2	32	26	28	30
Double 12 G Steel C	N9, N25, T	21'-8"	H3	35	27	30	32	21'-5"	H3	35	27	30	32	21'-1"	H3	35	27	30	32
Steel Cloverleaf	W	4'-0"	A2	20	22	24	25	3'-11"	A3	20	22	24	26	3'-9"	A3	20	22	24	26
DBL Steel Cloverleaf	AA	7'-11"	E	25	22	24	25	7'-8"	E	25	22	24	26	7'-6"	E	25	22	24	26
4x3 I Beam	Y	5'-5"	C	22	22	24	25	5'-3"	C	22	22	24	26	5'-1"	C	22	22	24	26
7x4 I Beam	Q	8'-8"	F	25	22	24	25	8'-4"	F	26	22	24	26	8'-1"	F	26	22	24	26

Header	Detail	trib 13'	Min Post Type	Uplift Footing (in)	8'	12'	15'	trib 14'	Min Post Type	Uplift Footing (in)	8'	12'	15'	trib 15'	Min Post Type	Uplift Footing (in)	8'	12'	15'
On Slab	On Slab	n/a	A1					n/a	A1					n/a	A1				
0.042"x3"x8"	N30	3'-6"	A3	20	22	25	26	3'-3"	A3	20	23	25	27	3'-1"	A3	20	23	26	27
Double 3"x8"	N25	6'-0"	E	24	22	25	26	5'-8"	E	24	23	25	27	5'-4"	E	24	23	26	27
Double 2"x6.625"	N25	5'-7"	E	23	22	25	26	5'-4"	E	23	23	25	27	5'-1"	E	24	23	26	27
5.5" Extruded Fascia	L	5'-1"	D	23	22	25	26	4'-10"	D	23	23	25	27	4'-7"	D	23	23	26	27
California Fascia	N10, G	4'-2"	B	21	22	25	26	3'-11"	C	21	23	25	27	3'-8"	C	21	23	26	27
Classic Fascia	H	8'-9"	G	27	22	25	26	8'-7"	G	28	23	25	27	8'-3"	G	28	23	26	27
16 G Steel C	N9, T	4'-9"	D	22	22	25	26	4'-4"	C	22	23	25	27	4'-1"	C	22	23	26	27
14 G Steel C	N9, T	6'-5"	E	24	22	25	26	5'-11"	E	24	23	25	27	5'-6"	E	24	23	26	27
12 G Steel C	N9, T	11'-4"	H1	29	24	26	28	10'-9"	H1	30	24	27	28	10'-3"	H1	30	24	27	28
Double 16 G Steel C	N9, N25, T	13'-2"	H1	31	25	28	29	12'-7"	H1	31	25	28	29	12'-1"	H1	32	25	28	30
Double 14 G Steel C	N9, N25, T	15'-8"	H2	33	26	29	30	15'-0"	H2	33	26	29	31	14'-4"	H2	33	26	29	31
Double 12 G Steel C	N9, N25, T	20'-6"	H4	36	28	31	33	20'-0"	H4	36	28	31	33	19'-7"	H4	37	28	32	33
Steel Cloverleaf	W	3'-7"	A3	20	22	25	26	3'-4"	A3	20	23	25	27	3'-2"	A3	20	23	26	27
DBL Steel Cloverleaf	AA	7'-3"	E	25	22	25	26	7'-0"	F	26	23	25	27	6'-9"	F	26	23	26	27
4x3 I Beam	Y	4'-9"	D	22	22	25	26	4'-5"	D	22	23	25	27	4'-2"	D	22	23	26	27
7x4 I Beam	Q	7'-7"	F	26	22	25	26	7'-1"	F	26	23	25	27	6'-8"	F	26	23	26	27

Amerimax Exterior Home Products
28921 US Hwy 74
Romoland, CA 92585

Carl Putnam, P. E.
3441 Ivylink Place
Lynchburg, VA 24503
carlputnam@comcast.net

Registered Professional Engineer (Civil) CERTIFICATE NO. 39702 CARL PUTNAM Date Signed ARIZONA U.S.A. Expires 09/30/2024

JAN 20 2023

SECTION 5.0 POST SPACING, POST TYPE AND FOOTING SIZE FOR SOLID COVERS

Roof Solidity: 100%

Ground Snow Load: 20 psf **Live Load: 20 psf** **Wind Speed: 100 MPH EXPOSURE C or 115 MPH EXPOSURE B** **Seismic Ss= 150%** **Seismic Design Category D** **Structures are Attached to Existing Building**

Table 5.15a (cubic footing "d"; Constrained Footing (in) by Max Post Length 8', 12', 15')

Header	Detail	trib 3'	Min Post Type	Uplift Footing (in)	8'	12'	15'	trib 3.5'	Min Post Type	Uplift Footing (in)	8'	12'	15'	trib 4'	Min Post Type	Uplift Footing (in)	8'	12'	15'	trib 4.5'	Min Post Type	Uplift Footing (in)	8'	12'	15'	trib 5'	Min Post Type	Uplift Footing (in)	8'	12'	15'
On Slab	On Slab	11'-10"	A1					10'-2"	A1					8'-11"	A1					7'-11"	A1					7'-1"	A1				
0.042"x3"x8"	N30	9'-8"	A1	21	18	20	21	8'-10"	A1	21	18	20	22	8'-2"	A1	22	19	21	22	7'-7"	A1	22	20	22	23	7'-1"	A1	22	20	22	24
Double 3"x8"	N25	14'-5"	A2	24	18	20	21	13'-3"	A3	24	18	20	22	12'-5"	A3	25	19	21	22	11'-7"	A3	25	20	22	23	10'-11"	C	26	20	22	24
Double 2"x6.625"	N25	12'-11"	A2	23	18	20	21	11'-10"	A2	23	18	20	22	11'-2"	A3	24	19	21	22	10'-5"	A3	24	20	22	23	9'-10"	A3	25	20	22	24
5.5" Extruded Fascia	L	11'-10"	A1	22	18	20	21	11'-3"	A2	23	18	20	22	10'-7"	A2	23	19	21	22	9'-11"	A3	24	20	22	23	9'-3"	A3	24	20	22	24
California Fascia	N10, G	10'-9"	A1	21	18	20	21	9'-10"	A1	22	18	20	22	9'-2"	A1	22	19	21	22	8'-6"	A2	23	20	22	23	7'-11"	A2	23	20	22	24
Classic Fascia	H	14'-3"	A2	23	18	20	21	13'-6"	A3	24	18	20	22	13'-0"	A3	25	19	21	22	12'-6"	C	26	20	22	23	12'-1"	C	26	20	22	24
16 G Steel C	N9, T	16'-1"	A3	24	18	20	21	14'-6"	A3	25	18	20	22	13'-5"	B	25	19	21	22	12'-4"	C	26	20	22	23	11'-5"	C	26	20	22	24
14 G Steel C	N9, T	19'-6"	C	26	19	21	22	17'-7"	D	27	19	21	22	16'-4"	D	27	19	22	23	15'-0"	D	27	20	22	23	13'-11"	D	28	20	22	24
12 G Steel C	N9, T	26'-4"	E	29	20	23	24	25'-1"	E	30	21	23	25	24'-0"	F	31	21	24	25	22'-7"	F	31	22	24	26	21'-2"	G	32	22	24	26
Double 16 G Steel C	N9, N25, T	25'-5"	E	29	20	22	24	24'-2"	E	30	21	23	24	23'-2"	E	30	21	24	25	22'-4"	F	31	22	24	25	21'-7"	G	32	22	24	26
Double 14 G Steel C	N9, N25, T	27'-9"	E	29	21	23	24	26'-5"	E	30	21	24	25	25'-3"	F	31	22	24	25	24'-4"	G	32	22	25	26	23'-6"	G	33	23	25	26
Double 12 G Steel C	N9, N25, T	33'-3"	F	31	22	24	25	31'-7"	G	32	22	25	26	30'-3"	G	33	23	25	27	29'-2"	H1	34	23	26	27	28'-2"	H1	35	24	26	28
Steel Cloverleaf	W	9'-5"	A1	21	18	20	21	8'-7"	A1	21	18	20	22	8'-0"	A1	21	19	21	22	7'-5"	A1	22	20	22	23	6'-11"	A1	22	20	22	24
DBL Steel Cloverleaf	AA	12'-10"	A2	23	18	20	21	12'-3"	A2	24	18	20	22	11'-8"	A3	24	19	21	22	11'-3"	A3	25	20	22	23	10'-11"	C	25	20	22	24
4x3 I Beam	Y	10'-10"	A1	21	18	20	21	10'-5"	A1	22	18	20	22	10'-1"	A2	23	19	21	22	9'-7"	A2	24	20	22	23	9'-1"	A3	24	20	22	24
7x4 I Beam	Q	15'-4"	A3	24	18	20	21	14'-9"	A3	25	18	20	22	14'-4"	C	26	19	21	22	13'-11"	D	27	20	22	23	13'-6"	D	27	20	22	24

Header	Detail	trib 5.5'	Min Post Type	Uplift Footing (in)	8'	12'	15'	trib 6'	Min Post Type	Uplift Footing (in)	8'	12'	15'	trib 6.5'	Min Post Type	Uplift Footing (in)	8'	12'	15'	trib 7'	Min Post Type	Uplift Footing (in)	8'	12'	15'	trib 7.5'	Min Post Type	Uplift Footing (in)	8'	12'	15'	trib 8'	Min Post Type	Uplift Footing (in)	8'	12'	15'
On Slab	On Slab	6'-5"	A1					5'-11"	A1					5'-5"	A1					5'-1"	A1					4'-9"	A1					4'-5"	A1				
0.042"x3"x8"	N30	6'-8"	A1	22	21	23	24	6'-3"	A2	23	21	23	25	5'-11"	A2	23	22	24	25	5'-7"	A2	23	22	24	26	5'-4"	A2	23	22	25	26	5'-1"	A2	23	23	25	27
Double 3"x8"	N25	10'-4"	C	26	21	23	24	9'-9"	C	26	21	23	25	9'-4"	C	26	22	24	25	8'-11"	D	27	22	24	26	8'-6"	D	27	22	25	26	8'-2"	D	27	23	25	27
Double 2"x6.625"	N25	9'-4"	A3	25	21	23	24	8'-10"	B	25	21	23	25	8'-5"	C	26	22	24	25	8'-1"	C	26	22	24	26	7'-9"	C	26	22	25	26	7'-6"	C	26	23	25	27
5.5" Extruded Fascia	L	8'-9"	A3	24	21	23	24	8'-4"	A3	25	21	23	25	7'-11"	A3	25	22	24	25	7'-6"	B	25	22	24	26	7'-3"	C	25	22	25	26	7'-0"	C	26	23	25	27
California Fascia	N10, G	7'-6"	A2	23	21	23	24	7'-1"	A2	23	21	23	25	6'-8"	A2	24	22	24	25	6'-4"	A3	24	22	24	26	6'-1"	A3	24	22	25	26	5'-10"	A3	24	23	25	27
Classic Fascia	H	11'-8"	D	27	21	23	24	11'-4"	D	27	21	23	25	11'-1"	E	28	22	24	25	10'-9"	E	28	22	24	26	10'-7"	E	29	22	25	26	10'-4"	E	29	23	25	27
16 G Steel C	N9, T	10'-7"	C	26	21	23	24	9'-11"	C	26	21	23	25	9'-4"	C	26	22	24	25	8'-7"	C	26	22	24	26	8'-0"	C	26	22	25	26	7'-7"	D	26	23	25	27
14 G Steel C	N9, T	13'-0"	E	28	21	23	24	12'-3"	E	28	21	23	25	11'-7"	E	28	22	24	25	10'-11"	E	29	22	24	26	10'-5"	E	29	22	25	26	10'-0"	E	29	23	25	27
12 G Steel C	N9, T	19'-11"	G	32	22	25	26	18'-9"	G	32	22	25	26	17'-10"	G	33	22	25	26	17'-0"	G	33	23	25	27	16'-3"	G	33	23	25	27	15'-8"	G	34	23	25	27
Double 16 G Steel C	N9, N25, T	20'-11"	G	33	22	25	26	20'-0"	G	33	23	25	27	19'-2"	G	34	23	25	27	18'-5"	G	34	23	26	27	17'-9"	H1	34	23	26	27	17'-2"	H1	35	23	26	28
Double 14 G Steel C	N9, N25, T	22'-9"	G	34	23	25	27	22'-2"	H1	34	23	26	27	21'-7"	H1	35	24	26	28	21'-1"	H1	35	24	26	28	20'-7"	H1	36	24	27	28	20'-1"	H1	37	24	27	29
Double 12 G Steel C	N9, N25, T	27'-3"	H1	36	24	27	28	26'-6"	H1	36	24	27	29	25'-10"	H1	37	25	27	29	25'-2"	H1	38	25	28	29	24'-8"	H2	38	25	28	30	24'-1"	H2	39	26	28	30
Steel Cloverleaf	W	6'-5"	A1	22	21	23	24	6'-1"	A1	22	21	23	25	5'-9"	A2	23	22	24	25	5'-6"	A2	23	22	24	26	5'-3"	A2	23	22	25	26	5'-0"	A2	23	23	25	27
DBL Steel Cloverleaf	AA	10'-7"	C	26	21	23	24	10'-3"	D	27	21	23	25	10'-0"	D	27	22	24	25	9'-9"	D	27	22	24	26	9'-6"	E	28	22	25	26	9'-3"	E	28	23	25	27
4x3 I Beam	Y	8'-8"	A3	24	21	23	24	8'-3"	A3	25	21	23	25	7'-11"	A3	25	22	24	25	7'-8"	B	25	22	24	26	7'-3"	C	26	22	25	26	7'-0"	C	26	23	25	27
7x4 I Beam	Q	13'-2"	E	28	21	23	24	12'-11"	E	29	21	23	25	12'-8"	E	29	22	24	25	12'-2"	E	30	22	24	26	11'-6"	E	30	22	25	26	11'-1"	E	30	23	25	27

Header	Detail	trib 8.5'	Min Post Type	Uplift Footing (in)	8'	12'	15'	trib 9'	Min Post Type	Uplift Footing (in)	8'	12'	15'	trib 10'	Min Post Type	Uplift Footing (in)	8'	12'	15'	trib 10.5'	Min Post Type	Uplift Footing (in)	8'	12'	15'	trib 11'	Min Post Type	Uplift Footing (in)	8'	12'	15'
On Slab	On Slab	4'-2"	A1					3'-11"	A1					3'-6"	A1					3'-4"	A1					3'-2"	A1				
0.042"x3"x8"	N30	4'-10"	A2	23	23	26	27	4'-8"	A2	23	23	26	28	4'-3"	A2	24	24	27	28	4'-1"	A2	24	24	27	29	3'-11"	A2	24	25	27	29
Double 3"x8"	N25	7'-11"	D	27	23	26	27	7'-7"	D	28	23	26	28	7'-1"	E	28	24	27	28	6'-10"	E	28	24	27	29	6'-8"	E	28	25	27	29
Double 2"x6.625"	N25	7'-3"	D	27	23	26	27	7'-0"	D	27	23	26	28	6'-6"	D	27	24	27	28	6'-4"	D	27	24	27	29	6'-2"	D	27	25	27	29
5.5" Extruded Fascia	L	6'-8"	C	26	23	26	27	6'-6"	C	26	23	26	28	6'-0"	C	26	24	27	28	5'-10"	D	27	24	27	29	5'-8"	D	27	25	27	29
California Fascia	N10, G	5'-7"	A3	24	23	26	27	5'-4"	A3	25	23	26	28	5'-0"	A3	25	24	27	28	4'-10"	A3	25	24	27	29	4'-8"	A3	25	25	27	29
Classic Fascia	H	10'-1"	E	30	23	26	27	9'-11"	E	30	23	26	28	9'-7"	F	31	24	27	28	9'-5"	F	31	24	27	29	9'-3"	F	31	25	27	29
16 G Steel C	N9, T	7'-2"	C	26	23	26	27	6'-9"	C	26	23	26	28	6'-1"	C	26	24	27	28	5'-9"	C	26	24	27	29	5'-6"	C	26	25	27	29
14 G Steel C	N9, T	9'-7"	E	29	23	26	27	9'-1"	E	29	23	26	28	8'-2"	E	29	24	27	28	7'-9"	E	29	24	27	29	7'-5"	E	29	25	27	29
12 G Steel C	N9, T	15'-0"	G	34	23	26	27	14'-5"	G	34	23	26	28	13'-5"	H1	34	24	27	28	13'-0"	H1	35	24	27	29	12'-7"	H1	35	25	27	29
Double 16 G Steel C	N9, N25, T	16'-7"	H1	35	24	26	28	16'-1"	H1	35	24	26	28	15'-2"	H1	36	24	27	28	14'-9"	H1	36	24	27	29	14'-4"	H1	36	25	27	29
Double 14 G Steel C	N9, N25, T	19'-6"	H1	37	25	27	29	18'-11"	H1	37	25	27	29	17'-10"	H1	38	25	28	29	17'-5"	H2	38	25	28	30	16'-11"	H2	38	25	28	30
Double 12 G Steel C	N9, N25, T	23'-8"	H2	39	26	29	30	23'-2"	H2	40	26	29	31	22'-5"	H3	41	27	29	31	22'-0"	H3	41	27	30	31	21'-8"	H3	42	27	30	32
Steel Cloverleaf	W	4'-10"	A2	23	23	26	27	4'-7"	A2	23	23	26	28	4'-3"	A2	24	24	27	28	4'-1"	A2	24	24	27	29	4'-0"	A2	24	25	27	29
DBL Steel Cloverleaf	AA	8'-11"	E	29	23	26	27	8'-8"	E	29	23	26	28	8'-3"	E	29	24	27	28	8'-0"	E	29	24	27	29	7'-10"	E	30	25	27	29
4x3 I Beam	Y	6'-8"	C	26	23	26	27	6'-4"	C	26	23	26	28	5'-10"	C	26	24	27	28	5'-7"	C	26	24	27	29	5'-5"	C	26	25	27	29
7x4 I Beam	Q	10'-7"	E	30	23	26	27	10'-1"	E	30	23	26	28	9'-3"	E	30	24	27	28	8'-11"	E	31	24	27	29	8'-7"	E	31	25	27	29

Header	Detail	trib 11.5'	Min Post Type	Uplift Footing (in)	8'	12'	15'	trib 12'	Min Post Type	Uplift Footing (in)	8'	12'	15'	trib 13'	Min Post Type	Uplift Footing (in)	8'	12'	15'	trib 14'	Min Post Type	Uplift Footing (in)	8'	12'	15'	trib 15'	Min Post Type	Uplift Footing (in)	8'	12'	15'
On Slab	On Slab	3'-1"	A1					2'-11"	A1					2'-8"	A1					2'-6"	A1					2'-4"	A1				
0.042"x3"x8"	N30	3'-10"	A2	24	25	28	29	3'-8"	A3	24	25	28	30	3'-5"	A3	24	26	29	30	3'-3"	A3	24	26	29	31	3'-1"	A3	24	27	30	31
Double 3"x8"	N25	6'-5"	E	28	25	28	29	6'-3"	E	28	25	28	30	5'-11"	E	29	26	29	30	5'-7"	E	29	26	29	31	5'-4"	E	29	27	30	31
Double 2"x6.625"	N25	6'-0"	D	28	25	28	29	5'-10"	D	28	25	28	30	5'-6"	E	28	26	29	30	5'-3"	E	28	26	29	31	5'-0"	E	28	27	30	31
5.5" Extruded Fascia	L	5'-6"	D	27	25	28	29	5'-4"	D	27	25	28	30	5'-1"	D	27	26	29	30	4'-10"	D	27	26	29	31	4'-7"	D	28	27	30	31
California Fascia	N10, G	4'-6"	A3	25	25	28	29	4'-4"	B	25	25	28	30	4'-1"	B	25	26	29	30	3'-11"	C	26	26	29	31	3'-8"	C	26	27	30	31
Classic Fascia	H	9'-2"	G	32	25	28	29	9'-0"	G	32	25	28	30	8'-9"	G	33	26	29	30	8'-6"	G	33	26	29	31	8'-2"	G	33	27	30	31
16 G Steel C	N9, T	5'-3"	C	26	25	28	29	5'-1"	D	26	25	28	30	4'-8"	C	26	26	29	30	4'-4"	C	26	26	29	31	4'-0"	C	26	27	30	31
14 G Steel C	N9, T	7'-1"	E	29	25	28	29	6'-10"	E	29	25	28	30	6'-4"	E	29	26	29	30	5'-10"	E	29	26	29	31	5'-5"	E	29	27	30	31
12 G Steel C	N9, T	12'-2"	H1	35	25	28	29	11'-11"	H1	35	25	28	30	11'-3"	H1	35	26	29	30	10'-8"	H1	36	26	29	31	10'-2"	H1	36	27	30	31
Double 16 G Steel C	N9, N25, T	14'-0"	H1	37	25	28	29	13'-8"	H1	37	25	28	30	13'-1"	H1	37	26	29	30	12'-6"	H1	38	26	29	31	12'-0"	H1	38	27	30	31
Double 14 G Steel C	N9, N25, T	16'-7"	H2	39	25	28	30	16'-3"	H2	39	26	28	30	15'-6"	H2	39	26	29	30	14'-11"	H2	40	26	29	31	14'-3"	H2	40	27	30	31
Double 12 G Steel C	N9, N25, T	21'-5"	H3	42	27	30	32	21'-1"	H3	43	27	30	32	20'-6"	H4	43	28	31	33	20'-0"	H4	44	28	31	33	19'-6"	H4	45	28	32	33
Steel Cloverleaf	W	3'-10"	A3	24	25	28	29	3'-9"	A3	24	25	28	30	3'-6"	A3	24	26	29	30	3'-4"	A3	24	26	29	31	3'-2"	A3	24	27	30	31
DBL Steel Cloverleaf	AA	7'-8"	E	30	25	28	29	7'-6"	E	30	25	28	30	7'-2"	E	31	26	29	30	6'-11"	F	31	26	29	31	6'-8"	F	31	27	30	31
4x3 I Beam	Y	5'-2"	C	26	25	28	29	5'-0"	C	26	25	28	30	4'-8"	D	27	26	29	30	4'-5"	D	27	26	29	31	4'-2"	D	27	27	30	31
7x4 I Beam	Q	8'-3"	F	31	25	28	29	8'-0"	F	31	25	28	30	7'-6"	F	31	26	29	30	7'-0"	F	31	26	29	31	6'-7"	F	31	27	30	31

Ground Snow Load: 20 psf **Live Load: 20 psf** **Wind Speed: 100 MPH EXPOSURE C or 120 MPH EXPOSURE B** **Seismic Ss= 150%** **Seismic Design Category D** **Freestanding Structures**

Table 5.15b (cubic footing "d"; Constrained Footing (in) by Max Post Length 8', 12', 15')

Header	Detail	trib 3'	Min Post Type	Uplift Footing (in)	8'	12'	15'	trib 3.5'	Min Post Type	Uplift Footing (in)	8'	12'	15'	trib 4'	Min Post Type	Uplift Footing (in)	8'	12'	15'	trib 4.5'	Min Post Type	Uplift Footing (in)	8'	12'	15'	trib 5'	Min Post Type	Uplift Footing (in)	8'	12'	15'
On Slab	On Slab	n/a	A1					n/a	A1					n/a	A1					n/a	A1					n/a	A1				
0.042"x3"x8"	N30	9'-6"	A1	18	24	27	28	8'-8"	A1	18	24	26	28	8'-0"	A1	19	23	26	27	7'-4"	A1	19	23	25	27	6'-10"	A1	19	22	25	26
Double 3"x8"	N25	14'-3"	A3	21	27	30	32	13'-1"	A3	21	26	29	31	12'-2"	A3	22	26	29	30	11'-3"	B	22	25	28	30	10'-7"	C	22	25	28	29
Double 2"x6.625"	N25	12'-8"	A2	20	25	28	29	11'-9"	A2	20	24	27	29	10'-11"	A3	21	24	27	28	10'-1"	A3	21	23	26	28	9'-7"	A3	21	23	26	27
5.5" Extruded Fascia	L	11'-10"	A1	19	23	26	27	11'-2"	A2	20	23	25	27	10'-4"	A2	20	22	25	26	9'-7"	A3	21	22	24	26	9'-0"	A3	21	22	24	26
California Fascia	N10, G	10'-7"	A1	19	22	24	25	9'-8"	A1	19	21	24	25	8'-11"	A2	19	21	23	24	8'-3"	A2	20	20	23	24	7'-8"	A2	20	20	22	23
Classic Fascia	H	14'-3"	A3	21	25	27	29	13'-6"	A3	21	24	27	29	13'-0"	C	22	24	27	28	12'-6"	C	23	24	26	28	12'-1"	D	23	24	26	28
16 G Steel C	N9, T	15'-10"	A3	21	28	31	32	14'-3"	A3	22	27	30	32	13'-0"	C	22	26	29	31	11'-10"	C	22	26	28	30	11'-0"	C	22	25	28	30
14 G Steel C	N9, T	19'-2"	C	23	29	32	34	17'-4"	D	23	28	31	33	15'-10"	D	24	28	31	32	14'-6"	D	24	27	30	32	13'-6"	D	24	26	29	31
12 G Steel C	N9, T	26'-4"	E	25	31	35	37	25'-1"	E	26	31	34	36	23'-9"	F	27	31	34	36	21'-10"	F	27	30	33	35	20'-6"	G	28	29	33	35
Double 16 G Steel C	N9, N25, T	25'-5"	E	25	31	34	36	24'-2"	E	26	31	34	36	23'-2"	F	27	30	34	36	22'-4"	G	27	30	33	35	21'-6"	G	28	30	33	35
Double 14 G Steel C	N9, N25, T	27'-9"	E	26	32	35	37	26'-5"	F	27	31	35	37	25'-3"	G	28	31	34	36	24'-4"	G	28	31	34	36	23'-6"	G	29	30	34	36
Double 12 G Steel C	N9, N25, T	33'-3"	G	27	33	37	39	31'-7"	G	28	33	36	39	30'-3"	G	29	33	36	38	29'-2"	H1	30	32	36	38	28'-2"	H1	31	32	35	37
Steel Cloverleaf	W	9'-3"	A1	18	19	21	22	8'-5"	A1	18	18	20	21	7'-9"	A1	19	18	20	22	7'-1"	A1	19	19	21	22	6'-8"	A1	19	19	22	23
DBL Steel Cloverleaf	AA	12'-10"	A2	20	20	23	24	12'-3"	A3	21	20	22	24	11'-8"	A3	21	20	22	23	11'-3"	B	22	20	22	23	10'-11"	C	22	20	22	23
4x3 I Beam	Y	11'-6"	A1	19	21	24	25	10'-8"	A2	20	21	23	25	9'-11"	A2	20	21	23	24	9'-4"	A2	21	20	22	24	8'-10"	A3	21	20	22	23
7x4 I Beam	Q	16'-9"	A3	22	27	30	32	16'-4"	C	23	27	30	32	15'-8"	D	23	27	29	31	15'-3"	E	24	26	29	31	14'-11"	E	25	26	29	31

Header	Detail	trib 5.5'	Min Post Type	Uplift Footing (in)	8'	12'	15'	trib 6'	Min Post Type	Uplift Footing (in)	8'	12'	15'	trib 6.5'	Min Post Type	Uplift Footing (in)	8'	12'	15'	trib 7'	Min Post Type	Uplift Footing (in)	8'	12'	15'	trib 7.5'	Min Post Type	Uplift Footing (in)	8'	12'	15'	trib 8'	Min Post Type	Uplift Footing (in)	8'	12'	15'
On Slab	On Slab	n/a	A1					n/a	A1					n/a	A1					n/a	A1					n/a	A1					n/a	A1				
0.042"x3"x8"	N30	6'-5"	A1	19	22	24	26	6'-1"	A2	20	22	24	25	5'-9"	A2	20	21	24	25	5'-5"	A2	20	21	24	25	5'-2"	A2	20	22	24	25	4'-11"	A2	20	22	24	26
Double 3"x8"	N25	10'-0"	C	23	25	27	29	9'-6"	C	23	24	27	28	9'-1"	D	23	24	27	28	8'-8"	D	23	24	26	28	8'-4"	D	23	23	26	27	8'-0"	D	24	23	26	27
Double 2"x6.625"	N25	9'-1"	A3	22	23	25	27	8'-8"	C	22	23	25	26	8'-3"	C	22	22	25	26	7'-11"	C	23	22	24	26	7'-7"	C	23	22	24	26	7'-4"	D	23	22	24	26
5.5" Extruded Fascia	L	8'-6"	A3	21	21	24	25	8'-1"	A3	22	21	23	25	7'-9"	A3	22	21	23	25	7'-5"	C	22	21	24	25	7'-1"	C	22	22	24	25	6'-10"	C	22	22	24	26
California Fascia	N10, G	7'-3"	A2	20	20	22	23	6'-10"	A2	20	20	23	24	6'-6"	A2	21	21	23	24	6'-2"	A3	21	21	24	25	5'-11"	A3	21	22	24	25	5'-8"	A3	21	22	24	26
Classic Fascia	H	11'-8"	D	24	23	26	28	11'-4"	E	24	23	26	27	11'-1"	E	25	23	26	27	10'-9"	E	25	23	26	27	10'-7"	E	25	23	25	27	10'-4"	E	26	23	25	27
16 G Steel C	N9, T	10'-3"	C	23	25	27	29	9'-8"	C	23	24	27	29	8'-11"	C	23	24	26	28	8'-4"	C	23	23	26	27	7'-9"	D	23	23	26	27	7'-4"	D	23	23	25	27
14 G Steel C	N9, T	12'-8"	E	24	26	29	31	11'-11"	E	25	26	28	30	11'-3"	E	25	25	28	30	10'-8"	E	25	25	28	29	10'-2"	E	25	25	27	29	9'-8"	E	25	24	27	29
12 G Steel C	N9, T	19'-4"	G	28	29	32	34	18'-4"	G	28	29	32	34	17'-5"	G	29	28	31	33	16'-7"	G	29	28	31	33	15'-11"	G	29	28	31	32	15'-3"	G	29	27	30	32
Double 16 G Steel C	N9, N25, T	20'-6"	G	29	29	33	35	19'-7"	G	29	29	32	34	18'-9"	G	29	29	32	34	18'-1"	H1	30	29	32	33	17'-5"	H1	30	28	31	33	16'-10"	H1	30	28	31	33
Double 14 G Steel C	N9, N25, T	22'-9"	H1	30	30	34	35	22'-2"	H1	30	30	33	35	21'-7"	H1	31	30	33	35	21'-1"	H1	31	30	33	35	20'-4"	H1	32	29	33	34	19'-8"	H1	32	29	32	34
Double 12 G Steel C	N9, N25, T	27'-3"	H1	31	32	35	37	26'-6"	H1	32	31	35	37	25'-10"	H1	33	31	35	37	25'-2"	H2	33	31	34	36	24'-8"	H2	34	31	34	36	24'-1"	H2	34	31	34	36
Steel Cloverleaf	W	6'-3"	A1	19	20	22	23	5'-11"	A1	19	20	23	24	5'-7"	A2	20	21	23	24	5'-4"	A2	20	21	24	25	5'-1"	A2	20	22	24	25	4'-10"	A2	20	22	24	26
DBL Steel Cloverleaf	AA	10'-7"	C	23	20	22	23	10'-3"	D	23	20	23	24	10'-0"	D	24	21	23	24	9'-8"	D	24	21	24	25	9'-4"	E	24	22	24	25	9'-1"	E	25	22	24	26
4x3 I Beam	Y	8'-5"	A3	21	20	22	23	8'-1"	A3	22	20	23	24	7'-9"	B	22	21	23	24	7'-5"	C	22	21	24	25	7'-1"	C	22	22	24	25	6'-9"	C	22	22	24	26
7x4 I Beam	Q	14'-1"	E	25	26	29	30	13'-3"	E	25	25	28	30	12'-6"	E	26	25	28	29	11'-10"	E	26	25	27	29	11'-3"	E	26	24	27	29	10'-9"	E	26	24	27	28

Header	Detail	trib 8.5'	Min Post Type	Uplift Footing (in)	8'	12'	15'	trib 9'	Min Post Type	Uplift Footing (in)	8'	12'	15'	trib 10'	Min Post Type	Uplift Footing (in)	8'	12'	15'	trib 10.5'	Min Post Type	Uplift Footing (in)	8'	12'	15'	trib 11'	Min Post Type	Uplift Footing (in)	8'	12'	15'
On Slab	On Slab	n/a	A1					n/a	A1					n/a	A1					n/a	A1					n/a	A1				
0.042"x3"x8"	N30	4'-8"	A2	20	22	25	26	4'-6"	A2	20	23	25	27	4'-2"	A2	20	23	26	27	4'-0"	A2	21	24	26	28	3'-10"	A2	21	24	26	28
Double 3"x8"	N25	7'-8"	D	24	23	25	27	7'-4"	D	24	23	25	27	6'-11"	E	24	23	26	27	6'-8"	E	24	24	26	28	6'-6"	E	25	24	26	28
Double 2"x6.625"	N25	7'-0"	D	23	22	25	26	6'-9"	D	23	23	25	27	6'-4"	D	24	23	26	27	6'-2"	D	24	24	26	28	6'-0"	D	24	24	26	28
5.5" Extruded Fascia	L	6'-6"	C	23	22	25	26	6'-3"	C	23	23	25	27	5'-10"	D	23	23	26	27	5'-8"	D	23	24	26	28	5'-6"	D	23	24	26	28
California Fascia	N10, G	5'-5"	A3	21	22	25	26	5'-2"	A3	21	23	25	27	4'-10"	A3	22	23	26	27	4'-8"	A3	22	24	26	28	4'-6"	A3	22	24	26	28
Classic Fascia	H	10'-1"	E	26	23	25	27	9'-11"	E	26	23	25	27	9'-7"	F	27	23	26	27	9'-5"	F	27	24	26	28	9'-3"	G	28	24	26	28
16 G Steel C	N9, T	6'-10"	C	23	22	25	26	6'-5"	C	23	23	25	27	5'-10"	C	23	23	26	27	5'-6"	C	23	24	26	28	5'-3"	C	23	24	26	28
14 G Steel C	N9, T	9'-2"	E	25	24	27	28	8'-8"	E	25	24	26	28	7'-10"	E	25	23	26	27	7'-6"	E	25	24	26	28	7'-2"	E	25	24	26	28
12 G Steel C	N9, T	14'-7"	G	29	27	30	32	14'-0"	H1	30	27	30	31	13'-1"	H1	30	26	29	31	12'-8"	H1	30	26	29	31	12'-3"	H1	30	26	29	30
Double 16 G Steel C	N9, N25, T	16'-2"	H1	30	28	31	33	15'-8"	H1	31	28	31	32	14'-10"	H1	31	27	30	32	14'-5"	H1	31	27	30	32	14'-0"	H1	32	27	30	31
Double 14 G Steel C	N9, N25, T	19'-0"	H1	32	29	32	34	18'-5"	H1	32	29	32	34	17'-5"	H1	33	28	31	33	17'-0"	H2	33	28	31	33	16'-7"	H2	34	28	31	33
Double 12 G Steel C	N9, N25, T	23'-8"	H2	35	31	34	36	23'-2"	H2	35	30	34	36	22'-5"	H3	36	30	33	35	22'-0"	H3	36	30	33	35	21'-8"	H3	37	30	33	35
Steel Cloverleaf	W	4'-8"	A2	20	22	25	26	4'-6"	A2	20	23	25	27	4'-2"	A2	21	23	26	27	4'-0"	A2	21	24	26	28	3'-11"	A3	21	24	26	28
DBL Steel Cloverleaf	AA	8'-9"	E	25	22	25	26	8'-6"	E	25	23	25	27	8'-1"	E	26	23	26	27	7'-10"	E	26	24	26	28	7'-8"	E	26	24	26	28
4x3 I Beam	Y	6'-5"	C	22	22	25	26	6'-1"	C	23	23	25	27	5'-8"	C	23	23	26	27	5'-5"	C	23	24	26	28	5'-3"	C	23	24	26	28
7x4 I Beam	Q	10'-2"	E	26	24	26	28	9'-9"	E	26	24	26	28	8'-11"	E	26	23	26	27	8'-7"	F	27	24	26	28	8'-3"	F	27	24	26	28

Header	Detail	trib 11.5'	Min Post Type	Uplift Footing (in)	8'	12'	15'	trib 12'	Min Post Type	Uplift Footing (in)	8'	12'	15'	trib 13'	Min Post Type	Uplift Footing (in)	8'	12'	15'	trib 14'	Min Post Type	Uplift Footing (in)	8'	12'	15'	trib 15'	Min Post Type	Uplift Footing (in)	8'	12'	15'
On Slab	On Slab	n/a	A1					n/a	A1					n/a	A1					n/a	A1					n/a	A1				
0.042"x3"x8"	N30	3'-8"	A3	21	24	27	28	3'-7"	A3	21	24	27	29	3'-4"	A3	21	25	28	29	3'-2"	A3	21	25	28	30	2'-11"	A3	21	26	29	30
Double 3"x8"	N25	6'-3"	E	25	24	27	28	6'-1"	E	25	24	27	29	5'-9"	E	25	25	28	29	5'-5"	E	25	25	28	30	5'-2"	E	25	26	29	30
Double 2"x6.625"	N25	5'-10"	D	24	24	27	28	5'-8"	E	24	24	27	29	5'-5"	E	24	25	28	29	5'-1"	E	25	25	28	30	4'-11"	E	25	26	29	30
5.5" Extruded Fascia	L	5'-4"	D	23	24	27	28	5'-2"	D	23	24	27	29	4'-11"	D	24	25	28	29	4'-8"	D	24	25	28	30	4'-6"	D	24	26	29	30
California Fascia	N10, G	4'-4"	B	22	24	27	28	4'-3"	B	22	24	27	29	4'-0"	C	22	25	28	29	3'-9"	C	22	25	28	30	3'-7"	C	22	26	29	30
Classic Fascia	H	9'-2"	G	28	24	27	28	9'-0"	G	28	24	27	29	8'-8"	G	29	25	28	29	8'-4"	G	29	25	28	30	8'-0"	G	29	26	29	30
16 G Steel C	N9, T	5'-1"	D	23	24	27	28	4'-10"	D	23	24	27	29	4'-5"	C	23	25	28	29	4'-2"	C	23	25	28	30	3'-10"	D	23	26	29	30
14 G Steel C	N9, T	6'-10"	E	25	24	27	28	6'-7"	E	25	24	27	29	6'-0"	E	25	25	28	29	5'-7"	E	25	25	28	30	5'-3"	E	25	26	29	30
12 G Steel C	N9, T	11'-11"	H1	30	26	28	30	11'-7"	H1	31	25	28	30	10'-11"	H1	31	25	28	29	10'-4"	H1	31	25	28	30	9'-10"	H1	31	26	29	30
Double 16 G Steel C	N9, N25, T	13'-8"	H1	32	27	29	31	13'-4"	H1	32	26	29	31	12'-9"	H1	32	26	29	31	12'-2"	H1	33	26	29	30	11'-9"	H2	33	26	29	30
Double 14 G Steel C	N9, N25, T	16'-3"	H2	34	28	31	33	15'-10"	H2	34	28	31	32	15'-2"	H2	34	27	30	32	14'-6"	H2	35	27	30	32	13'-11"	H2	35	27	30	31
Double 12 G Steel C	N9, N25, T	21'-5"	H3	37	30	33	35	21'-1"	H4	37	30	33	35	20'-6"	H4	38	29	33	35	19'-9"	H4	39	29	32	34	19'-1"	H4	39	29	32	34
Steel Cloverleaf	W	3'-9"	A3	21	24	27	28	3'-8"	A3	21	24	27	29	3'-5"	A3	21	25	28	29	3'-3"	A3	21	25	28	30	3'-1"	A3	21	26	29	30
DBL Steel Cloverleaf	AA	7'-6"	E	26	24	27	28	7'-4"	E	26	24	27	29	7'-0"	F	27	25	28	29	6'-9"	F	27	25	28	30	6'-7"	F	27	26	29	30
4x3 I Beam	Y	5'-0"	C	23	24	27	28	4'-10"	D	23	24	27	29	4'-6"	D	23	25	28	29	4'-3"	D	23	25	28	30	4'-0"	D	23	26	29	30
7x4 I Beam	Q	8'-0"	F	27	24	27	28	7'-9"	F	27	24	27	29	7'-2"	F	27	25	28	29	6'-9"	F	27	25	28	30	6'-5"	F	27	26	29	30

Amerimax Exterior Home Products
28921 US Hwy 74
Romoland, CA 92585

Carl Putnam, P. E.
3441 Ivylink Place
Lynchburg, VA 24503
carlputnam@comcast.net

Registered Professional Engineer (Civil) CERTIFICATE NO. 39702 CARL PUTNAM Date Signed ARIZONA U.S.A. Expires 09/30/2024

SECTION 5.0 POST SPACING, POST TYPE AND FOOTING SIZE FOR SOLID COVERS

Roof Solidity: 100%

Ground Snow Load: 20 psf **Live Load: 20 psf** **Wind Speed: 105 MPH EXPOSURE B** **Seismic Ss= 150%** **Seismic Design Category D** **Structures are Attached to Existing Building**

Table 5.16a (cubic footing "d"; Constrained Footing (in), Max Post Length 8' / 12' / 15')

Header	Detail	trib 3'	Min Post Type	Uplift Footing (in)	8'	12'	15'	trib 3.5'	Min Post Type	Uplift Footing (in)	8'	12'	15'	trib 4'	Min Post Type	Uplift Footing (in)	8'	12'	15'	trib 4.5'	Min Post Type	Uplift Footing (in)	8'	12'	15'
On Slab	On Slab	11'-10"	A1					10'-2"	A1					8'-11"	A1					7'-11"	A1				
0.042"x3"x8"	N30	9'-10"	A1	19	17	18	20	8'-11"	A1	20	17	19	20	8'-2"	A1	20	18	20	21	7'-7"	A1	20	18	21	22
Double 3"x8"	N25	14'-8"	A2	22	18	19	21	13'-5"	A3	22	18	20	21	12'-5"	A3	23	18	20	21	11'-7"	A3	23	18	21	22
Double 2"x6.625"	N25	13'-1"	A2	21	17	19	20	12'-0"	A2	22	17	19	20	11'-2"	A2	22	18	20	21	10'-5"	A3	22	18	21	22
5.5" Extruded Fascia	L	11'-10"	A1	20	17	18	20	11'-3"	A2	21	17	19	20	10'-7"	A2	22	18	20	21	9'-11"	A2	22	18	21	22
California Fascia	N10, G	11'-0"	A1	20	17	18	20	10'-0"	A1	20	17	19	20	9'-2"	A1	21	18	20	21	8'-6"	A2	21	18	21	22
Classic Fascia	H	14'-3"	A2	22	17	19	20	13'-6"	A3	22	18	20	21	13'-0"	A3	23	18	20	21	12'-6"	C	24	19	21	22
16 G Steel C	N9, T	16'-5"	A3	23	18	20	21	14'-9"	A3	23	18	20	21	13'-5"	B	23	18	20	22	12'-4"	C	24	19	21	22
14 G Steel C	N9, T	19'-10"	C	24	19	21	22	17'-10"	D	25	19	21	23	16'-4"	D	25	19	22	23	15'-0"	D	25	20	22	23
12 G Steel C	N9, T	26'-4"	E	27	20	23	24	25'-1"	E	27	21	23	25	24'-0"	F	28	21	24	25	22'-7"	F	29	22	24	26
Double 16 G Steel C	N9, N25, T	25'-5"	E	26	20	22	24	24'-2"	E	27	21	23	24	23'-2"	E	28	21	24	25	22'-4"	F	29	22	24	25
Double 14 G Steel C	N9, N25, T	27'-9"	E	27	21	23	24	26'-5"	E	28	21	24	25	25'-3"	F	29	22	24	25	24'-4"	G	30	22	25	26
Double 12 G Steel C	N9, N25, T	33'-3"	F	29	22	24	25	31'-7"	G	30	22	25	26	30'-3"	G	31	23	25	27	29'-2"	G	31	23	26	27
Steel Cloverleaf	W	9'-7"	A1	19	17	18	20	8'-8"	A1	19	17	19	20	8'-0"	A1	20	18	20	21	7'-5"	A1	20	18	21	22
DBL Steel Cloverleaf	AA	12'-10"	A2	21	17	19	20	12'-3"	A2	22	17	19	20	11'-8"	A3	22	18	20	21	11'-3"	A3	23	18	21	22
4x3 I Beam	Y	11'-6"	A1	20	17	18	20	10'-11"	A2	21	17	19	20	10'-2"	A2	21	18	20	21	9'-7"	A2	22	18	21	22
7x4 I Beam	Q	16'-4"	A3	23	18	20	21	15'-8"	C	24	19	21	22	15'-3"	C	24	19	21	22	14'-9"	D	25	19	22	23

Header	Detail	trib 5'	Min Post Type	Uplift Footing (in)	8'	12'	15'	trib 5.5'	Min Post Type	Uplift Footing (in)	8'	12'	15'	trib 6'	Min Post Type	Uplift Footing (in)	8'	12'	15'	trib 6.5'	Min Post Type	Uplift Footing (in)	8'	12'	15'
On Slab	On Slab	7'-1"	A1					6'-5"	A1					5'-11"	A1					5'-5"	A1				
0.042"x3"x8"	N30	7'-1"	A1	20	19	21	22	6'-8"	A1	21	19	22	23	6'-4"	A2	21	20	22	23	5'-11"	A2	21	20	23	24
Double 3"x8"	N25	10'-11"	C	23	19	21	22	10'-5"	C	24	19	22	23	9'-10"	C	24	20	22	23	9'-4"	C	24	20	23	24
Double 2"x6.625"	N25	9'-10"	A3	23	19	21	22	9'-5"	A3	23	19	22	23	8'-11"	B	23	20	22	23	8'-6"	C	24	20	23	24
5.5" Extruded Fascia	L	9'-3"	A3	22	19	21	22	8'-10"	A3	23	19	22	23	8'-4"	A3	23	20	22	23	8'-0"	A3	23	20	23	24
California Fascia	N10, G	7'-11"	A2	21	19	21	22	7'-7"	A2	21	19	22	23	7'-1"	A2	22	20	22	23	6'-9"	A2	22	20	23	24
Classic Fascia	H	12'-1"	C	24	19	21	22	11'-8"	D	25	19	22	23	11'-4"	D	25	20	22	23	11'-1"	E	26	20	23	24
16 G Steel C	N9, T	11'-5"	C	24	19	21	22	10'-9"	C	24	19	22	23	10'-1"	C	24	20	22	23	9'-5"	C	24	20	23	24
14 G Steel C	N9, T	13'-11"	D	25	20	22	23	13'-2"	E	26	20	22	23	12'-5"	E	26	20	22	24	11'-8"	E	26	20	23	24
12 G Steel C	N9, T	21'-2"	G	29	22	24	26	20'-1"	G	30	22	25	26	19'-0"	G	30	22	25	26	18'-0"	G	30	23	25	26
Double 16 G Steel C	N9, N25, T	21'-7"	G	29	22	24	26	20'-11"	G	30	22	25	26	20'-2"	G	31	23	25	27	19'-4"	G	31	23	25	27
Double 14 G Steel C	N9, N25, T	23'-6"	G	30	23	25	26	22'-9"	G	31	23	25	27	22'-2"	H1	32	23	26	27	21'-7"	H1	32	24	26	28
Double 12 G Steel C	N9, N25, T	28'-2"	H1	32	24	26	28	27'-3"	H1	33	24	27	28	26'-6"	H1	34	24	27	29	25'-10"	H1	34	25	27	29
Steel Cloverleaf	W	6'-11"	A1	20	19	21	22	6'-6"	A1	20	19	22	23	6'-2"	A1	21	20	22	23	5'-10"	A2	21	20	23	24
DBL Steel Cloverleaf	AA	10'-11"	B	23	19	21	22	10'-7"	C	24	19	22	23	10'-3"	C	24	20	22	23	10'-0"	D	25	20	23	24
4x3 I Beam	Y	9'-1"	A3	22	19	21	22	8'-8"	A3	22	19	22	23	8'-4"	A3	23	20	22	23	8'-0"	A3	23	20	23	24
7x4 I Beam	Q	14'-5"	E	26	20	22	23	14'-1"	E	26	20	22	24	13'-9"	E	27	21	23	24	13'-0"	E	27	21	23	24

Header	Detail	trib 7'	Min Post Type	Uplift Footing (in)	8'	12'	15'	trib 7.5'	Min Post Type	Uplift Footing (in)	8'	12'	15'	trib 8'	Min Post Type	Uplift Footing (in)	8'	12'	15'
On Slab	On Slab	5'-1"	A1					4'-9"	A1					4'-5"	A1				
0.042"x3"x8"	N30	5'-8"	A2	21	21	23	24	5'-4"	A2	21	21	23	25	5'-2"	A2	21	21	24	25
Double 3"x8"	N25	8'-11"	D	25	21	23	24	8'-7"	D	25	21	23	25	8'-3"	D	25	21	24	25
Double 2"x6.625"	N25	8'-2"	C	24	21	23	24	7'-10"	C	24	21	23	25	7'-7"	C	24	21	24	25
5.5" Extruded Fascia	L	7'-7"	A3	23	21	23	24	7'-3"	C	23	21	23	25	7'-0"	C	24	21	24	25
California Fascia	N10, G	6'-5"	A3	22	21	23	24	6'-1"	A3	22	21	23	25	5'-11"	A3	22	21	24	25
Classic Fascia	H	10'-9"	E	26	21	23	24	10'-7"	E	27	21	23	25	10'-4"	E	27	21	24	25
16 G Steel C	N9, T	8'-9"	C	24	21	23	24	8'-2"	C	24	21	23	25	7'-8"	C	24	21	24	25
14 G Steel C	N9, T	11'-1"	E	26	21	23	24	10'-6"	E	27	21	23	25	10'-1"	E	27	21	24	25
12 G Steel C	N9, T	17'-1"	G	30	23	25	27	16'-4"	G	31	23	25	27	15'-9"	G	31	23	25	27
Double 16 G Steel C	N9, N25, T	18'-6"	G	31	23	26	27	17'-10"	H1	32	23	26	27	17'-4"	H1	32	24	26	28
Double 14 G Steel C	N9, N25, T	21'-1"	H1	33	24	26	28	20'-7"	H1	33	24	27	28	20'-2"	H1	34	24	27	29
Double 12 G Steel C	N9, N25, T	25'-2"	H1	35	25	28	29	24'-8"	H2	35	25	28	30	24'-1"	H2	36	26	28	30
Steel Cloverleaf	W	5'-6"	A2	21	21	23	24	5'-3"	A2	21	21	23	25	5'-1"	A2	21	21	24	25
DBL Steel Cloverleaf	AA	9'-9"	D	25	21	23	24	9'-6"	D	26	21	23	25	9'-3"	E	26	21	24	25
4x3 I Beam	Y	7'-8"	B	23	21	23	24	7'-4"	C	24	21	23	25	7'-0"	C	24	21	24	25
7x4 I Beam	Q	12'-3"	E	27	21	23	24	11'-8"	E	27	21	23	25	11'-2"	E	28	21	24	25

Header	Detail	trib 8.5'	Min Post Type	Uplift Footing (in)	8'	12'	15'	trib 9'	Min Post Type	Uplift Footing (in)	8'	12'	15'	trib 10'	Min Post Type	Uplift Footing (in)	8'	12'	15'	trib 10.5'	Min Post Type	Uplift Footing (in)	8'	12'	15'
On Slab	On Slab	4'-2"	A1					3'-11"	A1					3'-6"	A1					3'-4"	A1				
0.042"x3"x8"	N30	4'-11"	A2	21	22	24	26	4'-8"	A2	22	22	24	26	4'-4"	A2	22	23	25	27	4'-2"	A2	22	23	25	27
Double 3"x8"	N25	7'-11"	D	25	22	24	26	7'-8"	D	25	22	24	26	7'-1"	D	26	23	25	27	6'-11"	E	26	23	25	27
Double 2"x6.625"	N25	7'-3"	D	24	22	24	26	7'-0"	D	25	22	24	26	6'-7"	D	25	23	25	27	6'-5"	D	25	23	25	27
5.5" Extruded Fascia	L	6'-9"	C	24	22	24	26	6'-6"	C	24	22	24	26	6'-1"	C	24	23	25	27	5'-11"	D	25	23	25	27
California Fascia	N10, G	5'-8"	A3	23	22	24	26	5'-5"	A3	23	22	24	26	5'-0"	A3	23	23	25	27	4'-10"	A3	23	23	25	27
Classic Fascia	H	10'-1"	E	27	22	24	26	9'-11"	E	28	22	24	26	9'-7"	F	28	23	25	27	9'-5"	F	29	23	25	27
16 G Steel C	N9, T	7'-3"	C	24	22	24	26	6'-10"	C	24	22	24	26	6'-1"	C	24	23	25	27	5'-10"	D	24	23	25	27
14 G Steel C	N9, T	9'-7"	E	27	22	24	26	9'-2"	E	27	22	24	26	8'-3"	E	27	23	25	27	7'-11"	E	27	23	25	27
12 G Steel C	N9, T	15'-1"	G	31	23	26	27	14'-7"	G	31	23	26	27	13'-6"	H1	32	23	26	27	13'-2"	H1	32	23	26	28
Double 16 G Steel C	N9, N25, T	16'-8"	H1	32	24	26	28	16'-2"	H1	33	24	26	28	15'-3"	H1	33	24	27	28	14'-10"	H1	33	24	27	28
Double 14 G Steel C	N9, N25, T	19'-7"	H1	34	25	27	29	19'-0"	H1	34	25	27	29	17'-11"	H1	35	25	28	29	17'-6"	H1	35	25	28	30
Double 12 G Steel C	N9, N25, T	23'-8"	H2	36	26	29	30	23'-2"	H2	37	26	29	31	22'-5"	H3	38	27	29	31	22'-0"	H3	38	27	30	31
Steel Cloverleaf	W	4'-10"	A2	21	22	24	26	4'-8"	A2	22	22	24	26	4'-4"	A2	22	23	25	27	4'-2"	A2	22	23	25	27
DBL Steel Cloverleaf	AA	9'-0"	E	26	22	24	26	8'-9"	E	27	22	24	26	8'-3"	E	27	23	25	27	8'-1"	E	27	23	25	27
4x3 I Beam	Y	6'-8"	C	24	22	24	26	6'-5"	C	24	22	24	26	5'-10"	C	24	23	25	27	5'-8"	C	24	23	25	27
7x4 I Beam	Q	10'-8"	E	28	22	24	26	10'-2"	E	28	22	24	26	9'-4"	E	28	23	25	27	9'-0"	E	28	23	25	27

Header	Detail	trib 11'	Min Post Type	Uplift Footing (in)	8'	12'	15'	trib 11.5'	Min Post Type	Uplift Footing (in)	8'	12'	15'	trib 12'	Min Post Type	Uplift Footing (in)	8'	12'	15'
On Slab	On Slab	3'-2"	A1					3'-1"	A1					2'-11"	A1				
0.042"x3"x8"	N30	4'-0"	A2	22	23	26	27	3'-10"	A2	22	24	26	28	3'-9"	A3	22	24	26	28
Double 3"x8"	N25	6'-8"	E	26	23	26	27	6'-6"	E	26	24	26	28	6'-4"	E	26	24	26	28
Double 2"x6.625"	N25	6'-3"	D	25	23	26	27	6'-0"	D	25	24	26	28	5'-10"	D	26	24	26	28
5.5" Extruded Fascia	L	5'-9"	D	25	23	26	27	5'-7"	D	25	24	26	28	5'-5"	D	25	24	26	28
California Fascia	N10, G	4'-8"	A3	23	23	26	27	4'-6"	A3	23	24	26	28	4'-5"	A3	23	24	26	28
Classic Fascia	H	9'-3"	F	29	23	26	27	9'-2"	G	29	24	26	28	9'-0"	G	30	24	26	28
16 G Steel C	N9, T	5'-7"	C	24	23	26	27	5'-4"	C	24	24	26	28	5'-1"	C	24	24	26	28
14 G Steel C	N9, T	7'-7"	E	27	23	26	27	7'-2"	E	27	24	26	28	6'-11"	E	27	24	26	28
12 G Steel C	N9, T	12'-9"	H1	32	24	26	28	12'-4"	H1	32	24	26	28	12'-0"	H1	32	24	26	28
Double 16 G Steel C	N9, N25, T	14'-6"	H1	34	24	27	29	14'-1"	H1	34	24	27	29	13'-9"	H1	34	25	27	29
Double 14 G Steel C	N9, N25, T	17'-1"	H2	35	25	28	30	16'-8"	H2	36	26	28	30	16'-4"	H2	36	26	28	30
Double 12 G Steel C	N9, N25, T	21'-8"	H3	38	27	30	32	21'-5"	H3	39	27	30	32	21'-1"	H3	39	27	30	32
Steel Cloverleaf	W	4'-0"	A2	22	23	26	27	3'-11"	A3	22	24	26	28	3'-9"	A3	22	24	26	28
DBL Steel Cloverleaf	AA	7'-11"	E	27	23	26	27	7'-8"	E	28	24	26	28	7'-6"	E	28	24	26	28
4x3 I Beam	Y	5'-5"	C	24	23	26	27	5'-3"	C	24	24	26	28	5'-1"	C	24	24	26	28
7x4 I Beam	Q	8'-8"	F	28	23	26	27	8'-4"	F	28	24	26	28	8'-1"	F	28	24	26	28

Header	Detail	trib 13'	Min Post Type	Uplift Footing (in)	8'	12'	15'	trib 14'	Min Post Type	Uplift Footing (in)	8'	12'	15'	trib 15'	Min Post Type	Uplift Footing (in)	8'	12'	15'
On Slab	On Slab	2'-8"	A1					2'-6"	A1					2'-4"	A1				
0.042"x3"x8"	N30	3'-6"	A3	22	24	27	28	3'-3"	A3	22	25	27	29	3'-1"	A3	22	25	28	30
Double 3"x8"	N25	6'-0"	E	26	24	27	28	5'-8"	E	27	25	27	29	5'-4"	E	27	25	28	30
Double 2"x6.625"	N25	5'-7"	E	26	24	27	28	5'-4"	E	26	25	27	29	5'-1"	E	26	25	28	30
5.5" Extruded Fascia	L	5'-1"	D	25	24	27	28	4'-10"	D	25	25	27	29	4'-7"	D	25	25	28	30
California Fascia	N10, G	4'-2"	B	23	24	27	28	3'-11"	C	24	25	27	29	3'-8"	C	24	25	28	30
Classic Fascia	H	8'-9"	G	30	24	27	28	8'-7"	G	31	25	27	29	8'-3"	G	31	25	28	30
16 G Steel C	N9, T	4'-9"	D	24	24	27	28	4'-4"	C	24	25	27	29	4'-1"	C	24	25	28	30
14 G Steel C	N9, T	6'-5"	E	27	24	27	28	5'-11"	E	27	25	27	29	5'-6"	E	27	25	28	30
12 G Steel C	N9, T	11'-4"	H1	33	24	27	28	10'-9"	H1	33	25	27	29	10'-3"	H1	33	25	28	30
Double 16 G Steel C	N9, N25, T	13'-2"	H1	34	25	28	29	12'-7"	H1	35	25	28	29	12'-1"	H1	35	25	28	30
Double 14 G Steel C	N9, N25, T	15'-8"	H2	36	26	29	30	15'-0"	H2	37	26	29	31	14'-4"	H2	37	26	29	31
Double 12 G Steel C	N9, N25, T	20'-6"	H4	40	28	31	33	20'-0"	H4	40	28	31	33	19'-7"	H4	41	28	32	33
Steel Cloverleaf	W	3'-7"	A3	22	24	27	28	3'-4"	A3	22	25	27	29	3'-2"	A3	23	25	28	30
DBL Steel Cloverleaf	AA	7'-3"	E	28	24	27	28	7'-0"	F	29	25	27	29	6'-9"	F	29	25	28	30
4x3 I Beam	Y	4'-9"	D	25	24	27	28	4'-5"	D	25	25	27	29	4'-2"	D	25	25	28	30
7x4 I Beam	Q	7'-7"	F	29	24	27	28	7'-1"	F	29	25	27	29	6'-8"	F	29	25	28	30

Ground Snow Load: 20 psf **Live Load: 20 psf** **Wind Speed: 105 MPH EXPOSURE B** **Seismic Ss= 150%** **Seismic Design Category D** **Freestanding Structures**

Table 5.16b (cubic footing "d"; Constrained Footing (in), Max Post Length 8' / 12' / 15')

Header	Detail	trib 3'	Min Post Type	Uplift Footing (in)	8'	12'	15'	trib 3.5'	Min Post Type	Uplift Footing (in)	8'	12'	15'	trib 4'	Min Post Type	Uplift Footing (in)	8'	12'	15'	trib 4.5'	Min Post Type	Uplift Footing (in)	8'	12'	15'
On Slab	On Slab	n/a	A1					n/a	A1					n/a	A1					n/a	A1				
0.042"x3"x8"	N30	9'-10"	A1	17	23	25	27	8'-11"	A1	18	22	24	26	8'-2"	A1	18	22	24	26	7'-7"	A1	18	21	24	25
Double 3"x8"	N25	14'-8"	A2	20	25	28	29	13'-5"	A3	20	25	27	29	12'-5"	A3	21	24	27	28	11'-7"	A3	21	24	26	28
Double 2"x6.625"	N25	13'-1"	A2	19	23	26	27	12'-0"	A2	19	23	25	27	11'-2"	A2	20	22	25	26	10'-5"	A3	20	22	24	26
5.5" Extruded Fascia	L	11'-10"	A1	18	22	24	25	11'-3"	A2	19	21	24	25	10'-7"	A2	19	21	23	25	9'-11"	A2	20	21	23	24
California Fascia	N10, G	11'-0"	A1	18	20	22	24	10'-0"	A1	18	20	22	23	9'-2"	A1	19	19	21	23	8'-6"	A2	19	19	21	22
Classic Fascia	H	14'-3"	A2	19	23	25	27	13'-6"	A3	20	23	25	26	13'-0"	A3	21	22	25	26	12'-6"	C	21	22	25	26
16 G Steel C	N9, T	16'-5"	A3	20	26	29	30	14'-9"	A3	21	25	28	29	13'-5"	B	21	24	27	29	12'-4"	C	21	24	27	28
14 G Steel C	N9, T	19'-10"	C	22	27	30	32	17'-10"	D	22	26	29	31	16'-4"	D	22	26	29	30	15'-0"	D	23	25	28	30
12 G Steel C	N9, T	26'-4"	E	24	29	32	34	25'-1"	E	25	29	32	34	24'-0"	F	26	28	31	33	22'-7"	F	26	28	31	33
Double 16 G Steel C	N9, N25, T	25'-5"	E	24	29	32	34	24'-2"	E	24	28	32	33	23'-2"	E	25	28	31	33	22'-4"	F	26	28	31	33
Double 14 G Steel C	N9, N25, T	27'-9"	E	24	29	33	35	26'-5"	E	25	29	32	34	25'-3"	F	26	29	32	34	24'-4"	G	27	28	32	33
Double 12 G Steel C	N9, N25, T	33'-3"	F	26	31	34	36	31'-7"	G	27	30	34	36	30'-3"	G	28	30	33	35	29'-2"	G	28	30	33	35
Steel Cloverleaf	W	9'-7"	A1	17	17	19	21	8'-8"	A1	17	17	19	20	8'-0"	A1	18	17	19	20	7'-5"	A1	18	18	19	21
DBL Steel Cloverleaf	AA	12'-10"	A2	19	19	21	22	12'-3"	A2	20	19	21	22	11'-8"	A3	20	18	20	22	11'-3"	A3	21	18	20	21
4x3 I Beam	Y	11'-9"	A1	18	20	22	23	10'-11"	A2	19	19	22	23	10'-2"	A2	19	19	21	22	9'-7"	A2	20	19	21	22
7x4 I Beam	Q	17'-7"	A3	21	25	28	30	17'-0"	C	22	25	28	30	16'-4"	D	22	25	28	29	15'-11"	D	23	25	27	29

Header	Detail	trib 5'	Min Post Type	Uplift Footing (in)	8'	12'	15'	trib 5.5'	Min Post Type	Uplift Footing (in)	8'	12'	15'	trib 6'	Min Post Type	Uplift Footing (in)	8'	12'	15'	trib 6.5'	Min Post Type	Uplift Footing (in)	8'	12'	15'
On Slab	On Slab	n/a	A1					n/a	A1					n/a	A1					n/a	A1				
0.042"x3"x8"	N30	7'-1"	A1	18	21	23	24	6'-8"	A1	19	21	23	24	6'-4"	A2	19	20	22	24	5'-11"	A2	19	20	22	23
Double 3"x8"	N25	10'-11"	C	21	23	26	27	10'-5"	C	21	23	25	27	9'-10"	C	22	23	25	27	9'-4"	C	22	22	25	26
Double 2"x6.625"	N25	9'-10"	A3	20	21	24	25	9'-5"	A3	21	21	24	25	8'-11"	B	21	21	23	25	8'-6"	C	21	21	23	24
5.5" Extruded Fascia	L	9'-3"	A3	20	20	22	24	8'-10"	A3	20	20	22	23	8'-4"	A3	21	20	22	23	8'-0"	A3	21	19	22	23
California Fascia	N10, G	7'-11"	A2	19	19	21	22	7'-7"	A2	19	18	20	22	7'-1"	A2	20	19	21	22	6'-9"	A2	20	19	21	23
Classic Fascia	H	12'-1"	C	22	22	24	26	11'-8"	D	22	22	24	26	11'-4"	D	23	22	24	25	11'-1"	E	23	21	24	25
16 G Steel C	N9, T	11'-5"	C	21	23	26	28	10'-9"	C	22	23	26	27	10'-1"	C	22	23	25	27	9'-5"	C	22	22	25	26
14 G Steel C	N9, T	13'-11"	D	23	25	27	29	13'-2"	E	23	24	27	29	12'-5"	E	23	24	27	28	11'-8"	E	24	24	26	28
12 G Steel C	N9, T	21'-2"	G	26	27	30	32	20'-1"	G	27	27	30	32	19'-0"	G	27	27	30	31	18'-0"	G	27	26	29	31
Double 16 G Steel C	N9, N25, T	21'-7"	G	27	28	31	32	20'-11"	G	27	27	30	32	20'-2"	G	28	27	30	32	19'-4"	G	28	27	30	32
Double 14 G Steel C	N9, N25, T	23'-6"	G	27	28	32	33	22'-9"	G	28	28	31	33	22'-2"	H1	28	28	31	33	21'-7"	H1	29	28	31	32
Double 12 G Steel C	N9, N25, T	28'-2"	H1	29	30	33	35	27'-3"	H1	30	29	33	34	26'-6"	H1	30	29	32	34	25'-10"	H1	31	29	32	34
Steel Cloverleaf	W	6'-11"	A1	18	18	20	21	6'-6"	A1	18	18	20	22	6'-2"	A1	19	19	21	22	5'-10"	A2	19	19	21	23
DBL Steel Cloverleaf	AA	10'-11"	B	21	19	21	22	10'-7"	C	22	19	21	22	10'-3"	C	22	19	21	22	10'-0"	D	22	19	21	23
4x3 I Beam	Y	9'-1"	A3	20	19	21	22	8'-8"	A3	20	18	20	22	8'-4"	A3	21	19	21	22	8'-0"	A3	21	19	21	23
7x4 I Beam	Q	15'-6"	E	24	25	27	29	14'-9"	E	24	24	27	28	13'-10"	E	24	24	26	28	13'-0"	E	24	23	26	28

Header	Detail	trib 7'	Min Post Type	Uplift Footing (in)	8'	12'	15'	trib 7.5'	Min Post Type	Uplift Footing (in)	8'	12'	15'	trib 8'	Min Post Type	Uplift Footing (in)	8'	12'	15'
On Slab	On Slab	n/a	A1					n/a	A1					n/a	A1				
0.042"x3"x8"	N30	5'-8"	A2	19	20	22	23	5'-4"	A2	19	20	22	23	5'-2"	A2	19	20	23	24
Double 3"x8"	N25	8'-11"	D	22	22	24	26	8'-7"	D	22	22	24	26	8'-3"	D	23	22	24	25
Double 2"x6.625"	N25	8'-2"	C	21	21	23	24	7'-10"	C	22	20	23	24	7'-7"	C	22	20	23	24
5.5" Extruded Fascia	L	7'-7"	A3	21	20	22	23	7'-3"	C	21	20	22	23	7'-0"	C	21	20	23	24
California Fascia	N10, G	6'-5"	A3	20	20	22	23	6'-1"	A3	20	20	22	23	5'-11"	A3	20	20	23	24
Classic Fascia	H	10'-9"	E	24	21	24	25	10'-7"	E	24	21	23	25	10'-4"	E	24	21	23	25
16 G Steel C	N9, T	8'-9"	C	22	22	24	26	8'-2"	C	22	22	24	25	7'-8"	C	22	21	24	25
14 G Steel C	N9, T	11'-1"	E	24	23	26	27	10'-6"	E	24	23	26	27	10'-1"	E	24	23	25	27
12 G Steel C	N9, T	17'-1"	G	27	26	29	31	16'-4"	G	27	26	29	30	15'-9"	G	28	26	28	30
Double 16 G Steel C	N9, N25, T	18'-6"	G	28	27	29	31	17'-10"	H1	29	26	29	31	17'-4"	H1	29	26	29	31
Double 14 G Steel C	N9, N25, T	21'-1"	H1	29	27	30	32	20'-7"	H1	30	27	30	32	20'-2"	H1	30	27	30	32
Double 12 G Steel C	N9, N25, T	25'-2"	H1	31	29	32	34	24'-8"	H2	32	29	32	34	24'-1"	H2	32	28	32	33
Steel Cloverleaf	W	5'-6"	A2	19	20	22	23	5'-3"	A2	19	20	22	23	5'-1"	A2	19	20	23	24
DBL Steel Cloverleaf	AA	9'-9"	D	23	20	22	23	9'-6"	D	23	20	22	23	9'-3"	E	23	20	23	24
4x3 I Beam	Y	7'-8"	B	21	20	22	23	7'-4"	C	21	20	22	23	7'-0"	C	21	20	23	24
7x4 I Beam	Q	12'-3"	E	25	23	26	27	11'-8"	E	25	23	25	27	11'-2"	E	25	23	25	27

Header	Detail	trib 8.5'	Min Post Type	Uplift Footing (in)	8'	12'	15'	trib 9'	Min Post Type	Uplift Footing (in)	8'	12'	15'	trib 10'	Min Post Type	Uplift Footing (in)	8'	12'	15'	trib 10.5'	Min Post Type	Uplift Footing (in)	8'	12'	15'
On Slab	On Slab	n/a	A1					n/a	A1					n/a	A1					n/a	A1				
0.042"x3"x8"	N30	4'-11"	A2	19	21	23	24	4'-8"	A2	19	21	23	25	4'-4"	A2	20	22	24	25	4'-2"	A2	20	22	24	26
Double 3"x8"	N25	7'-11"	D	23	21	24	25	7'-8"	D	23	21	24	25	7'-1"	D	23	22	24	25	6'-11"	E	23	22	24	26
Double 2"x6.625"	N25	7'-3"	D	22	21	23	24	7'-0"	D	22	21	23	25	6'-7"	D	23	22	24	25	6'-5"	D	23	22	24	26
5.5" Extruded Fascia	L	6'-9"	C	22	21	23	24	6'-6"	C	22	21	23	25	6'-1"	C	22	22	24	25	5'-11"	D	22	22	24	26
California Fascia	N10, G	5'-8"	A3	20	21	23	24	5'-5"	A3	20	21	23	25	5'-0"	A3	21	22	24	25	4'-10"	A3	21	22	24	26
Classic Fascia	H	10'-1"	E	25	21	23	25	9'-11"	E	25	21	23	25	9'-7"	F	26	22	24	26	9'-5"	F	26	22	24	26
16 G Steel C	N9, T	7'-3"	C	22	21	23	25	6'-10"	C	22	21	23	25	6'-1"	C	22	22	24	25	5'-10"	D	22	22	24	26
14 G Steel C	N9, T	9'-7"	E	24	23	25	26	9'-2"	E	24	22	25	26	8'-3"	E	24	22	24	25	7'-11"	E	24	22	24	26
12 G Steel C	N9, T	15'-1"	G	28	25	28	30	14'-7"	G	28	25	28	29	13'-6"	H1	29	25	27	29	13'-2"	H1	29	25	27	29
Double 16 G Steel C	N9, N25, T	16'-8"	H1	29	26	29	30	16'-2"	H1	29	26	28	30	15'-3"	H1	30	25	28	30	14'-10"	H1	30	25	28	29
Double 14 G Steel C	N9, N25, T	19'-7"	H1	31	27	30	32	19'-0"	H1	31	27	30	31	17'-11"	H1	31	26	29	31	17'-6"	H1	32	26	29	31
Double 12 G Steel C	N9, N25, T	23'-8"	H2	33	28	31	33	23'-2"	H2	33	28	31	33	22'-5"	H3	34	28	31	33	22'-0"	H3	34	28	31	32
Steel Cloverleaf	W	4'-10"	A2	19	21	23	24	4'-8"	A2	19	21	23	25	4'-4"	A2	20	22	24	25	4'-2"	A2	20	22	24	26
DBL Steel Cloverleaf	AA	9'-0"	E	24	21	23	24	8'-9"	E	24	21	23	25	8'-3"	E	25	22	24	25	8'-1"	E	25	22	24	26
4x3 I Beam	Y	6'-8"	C	21	21	23	24	6'-5"	C	22	21	23	25	5'-10"	C	22	22	24	25	5'-8"	C	22	22	24	26
7x4 I Beam	Q	10'-8"	E	25	22	25	26	10'-2"	E	25	22	24	26	9'-4"	E	25	22	24	25	9'-0"	E	25	22	24	26

Header	Detail	trib 11'	Min Post Type	Uplift Footing (in)	8'	12'	15'	trib 11.5'	Min Post Type	Uplift Footing (in)	8'	12'	15'	trib 12'	Min Post Type	Uplift Footing (in)	8'	12'	15'
On Slab	On Slab	n/a	A1					n/a	A1					n/a	A1				
0.042"x3"x8"	N30	4'-0"	A2	20	22	24	26	3'-10"	A2	20	22	25	26	3'-9"	A3	20	23	25	26
Double 3"x8"	N25	6'-8"	E	23	22	24	26	6'-6"	E	24	22	25	26	6'-4"	E	24	23	25	26
Double 2"x6.625"	N25	6'-3"	D	23	22	24	26	6'-0"	D	23	22	25	26	5'-10"	D	23	23	25	26
5.5" Extruded Fascia	L	5'-9"	D	22	22	24	26	5'-7"	D	22	22	25	26	5'-5"	D	22	23	25	26
California Fascia	N10, G	4'-8"	A3	21	22	24	26	4'-6"	A3	21	22	25	26	4'-5"	A3	21	23	25	26
Classic Fascia	H	9'-3"	F	26	22	24	26	9'-2"	G	26	22	25	26	9'-0"	G	27	23	25	26
16 G Steel C	N9, T	5'-7"	C	22	22	24	26	5'-4"	C	22	22	25	26	5'-1"	C	22	23	25	26
14 G Steel C	N9, T	7'-7"	E	24	22	24	26	7'-2"	E	24	22	25	26	6'-11"	E	24	23	25	26
12 G Steel C	N9, T	12'-9"	H1	29	24	27	28	12'-4"	H1	29	24	27	28	12'-0"	H1	29	24	26	28
Double 16 G Steel C	N9, N25, T	14'-6"	H1	30	25	28	29	14'-1"	H1	30	25	27	29	13'-9"	H1	31	25	27	29
Double 14 G Steel C	N9, N25, T	17'-1"	H2	32	26	29	31	16'-8"	H2	32	26	29	30	16'-4"	H2	32	26	29	30
Double 12 G Steel C	N9, N25, T	21'-8"	H3	35	28	31	32	21'-5"	H3	35	28	31	32	21'-1"	H3	35	27	30	32
Steel Cloverleaf	W	4'-0"	A2	20	22	24	26	3'-11"	A3	20	22	25	26	3'-9"	A3	20	23	25	26
DBL Steel Cloverleaf	AA	7'-11"	E	25	22	24	26	7'-8"	E	25	22	25	26	7'-6"	E	25	23	25	26
4x3 I Beam	Y	5'-5"	C	22	22	24	26	5'-3"	C	22	22	25	26	5'-1"	C	22	23	25	26
7x4 I Beam	Q	8'-8"	F	25	22	24	26	8'-4"	F	26	22	25	26	8'-1"	F	26	23	25	26

Header	Detail	trib 13'	Min Post Type	Uplift Footing (in)	8'	12'	15'	trib 14'	Min Post Type	Uplift Footing (in)	8'	12'	15'	trib 15'	Min Post Type	Uplift Footing (in)	8'	12'	15'
On Slab	On Slab	n/a	A1					n/a	A1					n/a	A1				
0.042"x3"x8"	N30	3'-6"	A3	20	23	26	27	3'-3"	A3	20	23	26	28	3'-1"	A3	20	24	26	28
Double 3"x8"	N25	6'-0"	E	24	23	26	27	5'-8"	E	24	23	26	28	5'-4"	E	24	24	26	28
Double 2"x6.625"	N25	5'-7"	E	23	23	26	27	5'-4"	E	23	23	26	28	5'-1"	E	24	24	26	28
5.5" Extruded Fascia	L	5'-1"	D	23	23	26	27	4'-10"	D	23	23	26	28	4'-7"	D	23	24	26	28
California Fascia	N10, G	4'-2"	B	21	23	26	27	3'-11"	C	21	23	26	28	3'-8"	C	21	24	26	28
Classic Fascia	H	8'-9"	G	27	23	26	27	8'-7"	G	28	23	26	28	8'-3"	G	28	24	26	28
16 G Steel C	N9, T	4'-9"	D	22	23	26	27	4'-4"	C	22	23	26	28	4'-1"	C	22	24	26	28
14 G Steel C	N9, T	6'-5"	E	24	23	26	27	5'-11"	E	24	23	26	28	5'-6"	E	24	24	26	28
12 G Steel C	N9, T	11'-4"	H1	29	24	26	28	10'-9"	H1	30	24	27	28	10'-3"	H1	30	24	27	28
Double 16 G Steel C	N9, N25, T	13'-2"	H1	31	25	28	29	12'-7"	H1	31	25	28	29	12'-1"	H1	32	25	28	30
Double 14 G Steel C	N9, N25, T	15'-8"	H2	33	26	29	30	15'-0"	H2	33	26	29	31	14'-4"	H2	33	26	29	31
Double 12 G Steel C	N9, N25, T	20'-6"	H4	36	28	31	33	20'-0"	H4	36	28	31	33	19'-7"	H4	37	28	32	33
Steel Cloverleaf	W	3'-7"	A3	20	23	26	27	3'-4"	A3	20	23	26	28	3'-2"	A3	20	24	26	28
DBL Steel Cloverleaf	AA	7'-3"	E	25	23	26	27	7'-0"	F	26	23	26	28	6'-9"	F	26	24	26	28
4x3 I Beam	Y	4'-9"	D	22	23	26	27	4'-5"	D	22	23	26	28	4'-2"	D	22	24	26	28
7x4 I Beam	Q	7'-7"	F	26	23	26	27	7'-1"	F	26	23	26	28	6'-8"	F	26	24	26	28

Amerimax Exterior Home Products
28921 US Hwy 74
Romoland, CA 92585

Carl Putnam, P. E.
3441 Ivylink Place
Lynchburg, VA 24503
carlputnam@comcast.net

Registered Professional Engineer (Civil)
CERTIFICATE NO. 39702
CARL PUTNAM
Date Signed
ARIZONA U.S.A.
Expires 09/30/2024

JAN 20 2023

SECTION 5.0 POST SPACING, POST TYPE AND FOOTING SIZE FOR SOLID COVERS

Roof Solidity: 100%

Ground Snow Load: 20 psf **Live Load: 20 psf** **Wind Speed: 110 MPH EXPOSURE C or 130 MPH EXPOSURE B** **Seismic Ss= 150%** **Seismic Design Category D** **Structures are Attached to Existing Building**

Table 5.17a

Header	Detail	trib 3'	Min Post Type	Uplift Footing (in)	cubic footing "d" Constrained Footing (in) Max Post Length 8'	12'	15'	trib 3.5'	Min Post Type	Uplift Footing (in)	cubic footing "d" Constrained Footing (in) Max Post Length 8'	12'	15'	trib 4'	Min Post Type	Uplift Footing (in)	cubic footing "d" Constrained Footing (in) Max Post Length 8'	12'	15'
On Slab	On Slab	11'-10''	A2					10'-2''	A2					8'-11''	A2				
0.042"x3"x8"	N30	9'-4''	A1	22	19	21	22	8'-7''	A1	22	19	21	23	7'-9''	A1	23	20	22	24
Double 3"x8"	N25	14'-0''	A3	25	19	21	22	12'-11''	A3	26	19	21	23	11'-10''	A3	26	20	22	24
Double 2"x6.625"	N25	12'-6''	A2	24	19	21	22	11'-7''	A2	25	19	21	23	10'-8''	A3	25	20	22	24
5.5" Extruded Fascia	L	11'-10''	A2	24	19	21	22	11'-0''	A2	24	19	21	23	10'-1''	A2	25	20	22	24
California Fascia	N10, G	10'-5''	A1	23	19	21	22	9'-7''	A1	23	19	21	23	8'-9''	A2	23	20	22	24
Classic Fascia	H	14'-3''	A3	25	19	21	22	13'-6''	A3	26	19	21	23	13'-0''	C	27	20	22	24
16 G Steel C	N9, T	15'-6''	A3	26	19	21	22	14'-0''	A3	26	19	21	23	12'-8''	C	27	20	22	24
14 G Steel C	N9, T	18'-10''	C	28	19	21	22	17'-1''	D	28	19	21	23	15'-5''	D	28	20	22	24
12 G Steel C	N9, T	26'-4''	E	31	20	23	24	25'-1''	E	32	21	23	25	23'-2''	F	32	21	24	25
Double 16 G Steel C	N9, N25, T	25'-5''	E	30	20	22	24	24'-2''	E	32	21	23	24	23'-2''	F	32	21	24	25
Double 14 G Steel C	N9, N25, T	27'-9''	E	31	21	23	24	26'-5''	F	32	21	24	25	25'-3''	G	33	22	24	25
Double 12 G Steel C	N9, N25, T	33'-3''	G	33	22	24	25	31'-7''	G	34	22	25	26	30'-3''	H1	31	24	38	40
Steel Cloverleaf	W	9'-2''	A1	22	19	21	22	8'-4''	A1	22	19	21	23	7'-7''	A1	22	20	22	24
DBL Steel Cloverleaf	AA	12'-10''	A2	24	19	21	22	12'-3''	A3	25	19	21	23	11'-8''	A3	26	20	22	24
4x3 I Beam	Y	10'-4''	A1	23	19	21	22	9'-11''	A1	23	19	21	23	9'-7''	A2	24	20	22	24
7x4 I Beam	Q	14'-8''	A3	25	19	21	22	14'-1''	A3	26	19	21	23	13'-7''	C	27	20	22	24

Header	Detail	trib 4.5'	Min Post Type	Uplift Footing (in)	cubic footing "d" Constrained Footing (in) Max Post Length 8'	12'	15'	trib 5'	Min Post Type	Uplift Footing (in)	cubic footing "d" Constrained Footing (in) Max Post Length 8'	12'	15'	trib 5.5'	Min Post Type	Uplift Footing (in)	cubic footing "d" Constrained Footing (in) Max Post Length 8'	12'	15'
On Slab	On Slab	7'-11''	A2					7'-1''	A2					6'-5''	A2				
0.042"x3"x8"	N30	7'-3''	A1	23	21	23	24	6'-9''	A1	23	21	24	25	6'-4''	A2	24	22	24	26
Double 3"x8"	N25	11'-2''	B	26	21	23	24	10'-6''	C	27	21	24	25	9'-11''	C	27	22	24	26
Double 2"x6.625"	N25	10'-0''	A3	26	21	23	24	9'-6''	A3	26	21	24	25	9'-0''	B	26	22	24	26
5.5" Extruded Fascia	L	9'-6''	A3	25	21	23	24	8'-11''	A3	25	21	24	25	8'-5''	A3	26	22	24	26
California Fascia	N10, G	8'-2''	A2	24	21	24	25	7'-8''	A2	24	21	24	25	7'-2''	A2	24	22	24	26
Classic Fascia	H	12'-6''	C	27	21	23	24	12'-1''	D	28	21	24	25	11'-8''	D	29	22	24	26
16 G Steel C	N9, T	11'-8''	C	27	21	23	24	10'-10''	C	27	21	24	25	10'-2''	C	27	22	24	26
14 G Steel C	N9, T	14'-3''	D	29	21	23	24	13'-4''	E	29	21	24	25	12'-6''	E	29	22	24	26
12 G Steel C	N9, T	21'-7''	F	33	21	24	25	20'-3''	G	33	22	24	25	19'-2''	G	34	22	24	26
Double 16 G Steel C	N9, N25, T	22'-4''	G	33	22	24	25	21'-4''	G	34	22	24	26	20'-4''	G	35	22	25	26
Double 14 G Steel C	N9, N25, T	24'-4''	G	34	22	25	26	23'-6''	G	35	23	25	26	22'-9''	H1	36	23	25	27
Double 12 G Steel C	N9, N25, T	29'-2''	H1	36	23	26	27	28'-2''	H1	37	24	26	28	27'-3''	H1	38	24	27	28
Steel Cloverleaf	W	7'-0''	A1	23	21	23	24	6'-7''	A1	23	21	24	25	6'-2''	A1	23	22	24	26
DBL Steel Cloverleaf	AA	11'-3''	C	27	21	23	24	10'-11''	C	27	21	24	25	10'-7''	D	28	22	24	26
4x3 I Beam	Y	9'-3''	A3	25	21	23	24	8'-9''	A3	25	21	24	25	8'-5''	A3	26	22	24	26
7x4 I Beam	Q	13'-2''	D	28	21	23	24	12'-10''	D	29	21	24	25	12'-7''	E	29	22	24	26

Header	Detail	trib 6'	Min Post Type	Uplift Footing (in)	cubic footing "d" Constrained Footing (in) Max Post Length 8'	12'	15'	trib 6.5'	Min Post Type	Uplift Footing (in)	cubic footing "d" Constrained Footing (in) Max Post Length 8'	12'	15'	trib 7'	Min Post Type	Uplift Footing (in)	cubic footing "d" Constrained Footing (in) Max Post Length 8'	12'	15'
On Slab	On Slab	5'-11''	A2					5'-5''	A1					5'-1''	A2				
0.042"x3"x8"	N30	5'-11''	A2	24	22	25	26	5'-8''	A2	24	23	25	27	5'-4''	A2	24	23	26	27
Double 3"x8"	N25	9'-4''	C	28	22	25	26	8'-11''	D	28	23	25	27	8'-7''	D	28	23	26	27
Double 2"x6.625"	N25	8'-6''	C	28	22	25	26	8'-2''	C	27	23	25	27	7'-10''	C	27	23	26	27
5.5" Extruded Fascia	L	8'-0''	A3	26	22	25	26	7'-7''	B	26	23	25	27	7'-3''	C	27	23	26	27
California Fascia	N10, G	6'-9''	A2	25	22	25	26	6'-2''	A3	25	23	25	27	6'-1''	A3	25	23	26	27
Classic Fascia	H	11'-4''	E	29	22	25	26	11'-1''	E	30	23	25	27	10'-9''	E	30	23	26	27
16 G Steel C	N9, T	9'-5''	C	28	22	25	26	8'-9''	C	28	23	25	27	8'-2''	C	28	23	26	27
14 G Steel C	N9, T	11'-8''	E	30	22	25	26	11'-1''	E	30	23	25	27	10'-6''	E	30	23	26	27
12 G Steel C	N9, T	18'-0''	G	34	22	25	26	17'-1''	G	35	23	25	27	16'-4''	G	35	23	26	27
Double 16 G Steel C	N9, N25, T	19'-4''	G	35	22	25	26	18'-6''	G	35	23	25	27	17'-10''	H1	36	23	26	27
Double 14 G Steel C	N9, N25, T	22'-2''	H1	37	23	26	27	21'-7''	H1	37	24	26	28	20'-10''	H1	38	24	26	28
Double 12 G Steel C	N9, N25, T	26'-6''	H1	39	24	27	29	25'-10''	H1	40	25	27	29	25'-2''	H2	40	25	28	29
Steel Cloverleaf	W	5'-10''	A2	23	22	25	26	5'-6''	A2	24	23	25	27	5'-3''	A2	24	23	26	27
DBL Steel Cloverleaf	AA	10'-3''	D	28	22	25	26	9'-11''	D	29	23	25	27	9'-7''	E	29	23	26	27
4x3 I Beam	Y	8'-0''	A3	26	22	25	26	7'-8''	B	26	23	25	27	7'-4''	C	27	23	26	27
7x4 I Beam	Q	12'-4''	E	30	22	25	26	12'-1''	E	31	23	25	27	11'-8''	E	31	23	26	27

Header	Detail	trib 7.5'	Min Post Type	Uplift Footing (in)	cubic footing "d" Constrained Footing (in) Max Post Length 8'	12'	15'	trib 8'	Min Post Type	Uplift Footing (in)	cubic footing "d" Constrained Footing (in) Max Post Length 8'	12'	15'
On Slab	On Slab	4'-9''	A2					4'-5''	A2				
0.042"x3"x8"	N30	4'-11''	A2	24	24	26	28	4'-10''	A2	24	24	27	28
Double 3"x8"	N25	8'-2''	D	28	24	26	28	7'-10''	D	29	24	27	28
Double 2"x6.625"	N25	7'-6''	C	28	24	26	28	7'-2''	D	28	24	27	28
5.5" Extruded Fascia	L	7'-0''	C	27	24	26	28	6'-8''	C	27	24	27	28
California Fascia	N10, G	5'-10''	A3	25	24	26	28	5'-4''	A3	25	24	27	28
Classic Fascia	H	10'-7''	E	31	24	26	28	10'-4''	E	31	24	27	28
16 G Steel C	N9, T	7'-3''	D	28	24	26	28	7'-1''	C	28	24	27	28
14 G Steel C	N9, T	9'-7''	E	30	24	26	28	9'-6''	E	30	24	27	28
12 G Steel C	N9, T	15'-8''	G	35	24	26	28	14'-11''	G	35	24	27	28
Double 16 G Steel C	N9, N25, T	16'-8''	H1	37	24	27	28	16'-6''	H1	37	24	27	28
Double 14 G Steel C	N9, N25, T	20'-1''	H1	38	24	27	28	19'-4''	H1	39	24	27	28
Double 12 G Steel C	N9, N25, T	24'-8''	H2	41	25	28	30	24'-1''	H2	41	26	28	30
Steel Cloverleaf	W	4'-10''	A2	21	23	25	27	4'-7''	A2	21	23	26	27
DBL Steel Cloverleaf	AA	9'-0''	E	26	23	25	27	8'-8''	E	26	23	26	27
4x3 I Beam	Y	6'-8''	C	23	23	25	27	6'-4''	C	23	23	26	27
7x4 I Beam	Q	10'-6''	E	27	25	28	30	10'-1''	E	27	25	28	29

Ground Snow Load: 20 psf **Live Load: 20 psf** **Wind Speed: 110 MPH EXPOSURE C or 130 MPH EXPOSURE B** **Seismic Ss= 150%** **Seismic Design Category D** **Freestanding Structures**

Table 5.17b

Header	Detail	trib 3'	Min Post Type	Uplift Footing (in)	cubic footing "d" Constrained Footing (in) Max Post Length 8'	12'	15'	trib 3.5'	Min Post Type	Uplift Footing (in)	cubic footing "d" Constrained Footing (in) Max Post Length 8'	12'	15'	trib 4'	Min Post Type	Uplift Footing (in)	cubic footing "d" Constrained Footing (in) Max Post Length 8'	12'	15'
On Slab	On Slab	n/a	A2					n/a	A2					n/a	A2				
0.042"x3"x8"	N30	9'-1''	A1	19	25	28	30	8'-4''	A1	19	25	27	29	7'-7''	A1	20	24	27	28
Double 3"x8"	N25	13'-8''	A3	22	28	31	33	12'-7''	A3	22	27	30	32	11'-7''	A3	23	27	30	31
Double 2"x6.625"	N25	12'-2''	A2	21	26	29	30	11'-3''	A2	22	25	28	30	10'-5''	A3	22	25	28	29
5.5" Extruded Fascia	L	11'-8''	A2	21	24	27	29	10'-9''	A2	21	24	26	28	9'-11''	A2	22	23	26	27
California Fascia	N10, G	10'-2''	A1	20	23	25	26	9'-4''	A1	20	22	24	26	8'-6''	A2	20	22	24	25
Classic Fascia	H	14'-3''	A3	22	26	29	30	13'-6''	B	23	26	28	30	13'-0''	C	24	25	28	30
16 G Steel C	N9, T	15'-0''	A3	22	29	32	34	13'-7''	B	23	28	31	33	12'-4''	C	23	27	30	32
14 G Steel C	N9, T	18'-2''	D	24	30	33	35	16'-7''	D	24	29	32	34	15'-0''	D	25	29	32	34
12 G Steel C	N9, T	26'-4''	E	27	33	37	39	24'-8''	F	28	32	36	38	22'-7''	F	28	32	35	37
Double 16 G Steel C	N9, N25, T	25'-5''	E	27	33	36	38	24'-2''	F	28	32	36	38	23'-2''	F	29	32	35	37
Double 14 G Steel C	N9, N25, T	27'-9''	E	28	33	37	39	26'-5''	F	29	33	37	39	25'-3''	G	29	33	36	38
Double 12 G Steel C	N9, N25, T	33'-3''	G	29	35	39	41	31'-7''	G	30	35	38	40	30'-3''	H1	31	34	38	40
Steel Cloverleaf	W	8'-10''	A1	19	19	22	23	8'-1''	A1	19	19	21	22	7'-5''	A1	20	19	21	23
DBL Steel Cloverleaf	AA	12'-10''	A2	21	21	24	25	12'-3''	A3	22	21	23	25	11'-8''	A3	23	21	23	25
4x3 I Beam	Y	11'-0''	A1	20	22	25	26	10'-3''	A2	21	22	24	26	9'-7''	A2	21	21	24	25
7x4 I Beam	Q	16'-1''	C	23	28	31	33	15'-6''	C	24	28	31	33	14'-11''	D	25	28	31	32

Header	Detail	trib 4.5'	Min Post Type	Uplift Footing (in)	cubic footing "d" Constrained Footing (in) Max Post Length 8'	12'	15'	trib 5'	Min Post Type	Uplift Footing (in)	cubic footing "d" Constrained Footing (in) Max Post Length 8'	12'	15'	trib 5.5'	Min Post Type	Uplift Footing (in)	cubic footing "d" Constrained Footing (in) Max Post Length 8'	12'	15'
On Slab	On Slab	n/a	A2					n/a	A2					n/a	A2				
0.042"x3"x8"	N30	7'-0''	A1	20	24	26	28	6'-1''	A2	20	23	25	27	6'-1''	A2	20	23	25	27
Double 3"x8"	N25	10'-10''	C	23	26	29	31	10'-2''	C	23	26	29	30	9'-7''	C	24	26	28	30
Double 2"x6.625"	N25	9'-9''	A3	22	24	27	29	9'-3''	A3	23	24	27	28	8'-8''	B	23	24	26	28
5.5" Extruded Fascia	L	9'-2''	A3	22	23	25	27	8'-8''	A3	22	23	25	27	8'-2''	A3	22	22	25	26
California Fascia	N10, G	7'-10''	A2	21	21	23	25	7'-5''	A2	21	21	23	24	6'-11''	A2	21	21	23	25
Classic Fascia	H	12'-6''	D	24	25	28	29	12'-1''	D	25	25	28	29	11'-8''	E	25	25	27	29
16 G Steel C	N9, T	11'-3''	C	23	27	29	31	10'-6''	C	24	26	29	31	9'-9''	C	24	26	28	30
14 G Steel C	N9, T	13'-9''	D	25	28	31	33	12'-11''	E	25	27	30	32	12'-0''	E	26	27	30	32
12 G Steel C	N9, T	20'-11''	G	29	31	34	36	19'-8''	G	29	31	34	36	18'-5''	G	29	30	33	35
Double 16 G Steel C	N9, N25, T	21'-11''	G	29	31	35	37	20'-10''	G	30	31	34	36	19'-9''	G	30	31	34	36
Double 14 G Steel C	N9, N25, T	24'-4''	G	30	32	36	38	23'-6''	H1	31	32	35	38	22'-9''	H1	32	32	35	37
Double 12 G Steel C	N9, N25, T	29'-2''	H1	32	34	37	40	28'-2''	H1	33	33	37	39	27'-3''	H1	34	33	37	39
Steel Cloverleaf	W	6'-10''	A1	20	20	22	23	6'-5''	A1	20	20	23	24	6'-0''	A1	20	21	23	25
DBL Steel Cloverleaf	AA	11'-3''	C	23	21	23	24	10'-11''	C	24	20	23	24	10'-6''	D	24	21	23	25
4x3 I Beam	Y	9'-0''	A3	22	21	23	25	8'-7''	A3	22	21	23	24	8'-2''	A3	22	21	23	25
7x4 I Beam	Q	14'-6''	E	25	27	30	32	14'-2''	E	26	27	30	32	13'-5''	E	26	27	30	31

Header	Detail	trib 6'	Min Post Type	Uplift Footing (in)	cubic footing "d" Constrained Footing (in) Max Post Length 8'	12'	15'	trib 6.5'	Min Post Type	Uplift Footing (in)	cubic footing "d" Constrained Footing (in) Max Post Length 8'	12'	15'	trib 7'	Min Post Type	Uplift Footing (in)	cubic footing "d" Constrained Footing (in) Max Post Length 8'	12'	15'
On Slab	On Slab	n/a	A2					n/a	A2					n/a	A2				
0.042"x3"x8"	N30	5'-9''	A2	21	22	24	26	5'-5''	A2	21	22	24	26	5'-2''	A2	21	22	24	26
Double 3"x8"	N25	8'-8''	D	24	25	28	30	8'-8''	D	24	25	28	29	8'-4''	D	25	25	27	29
Double 2"x6.625"	N25	8'-4''	C	23	23	26	28	7'-11''	C	24	23	25	27	7'-3''	D	24	23	25	27
5.5" Extruded Fascia	L	7'-7''	B	23	22	24	26	7'-1''	C	23	22	25	26	6'-9''	C	23	23	25	27
California Fascia	N10, G	6'-7''	A2	22	21	24	25	6'-2''	A3	22	22	24	26	5'-11''	A3	22	22	25	26
Classic Fascia	H	11'-4''	E	26	24	27	29	11'-1''	E	26	24	27	29	10'-9''	E	27	24	27	28
16 G Steel C	N9, T	9'-1''	C	24	25	28	29	8'-4''	C	24	25	27	29	7'-9''	D	24	24	27	28
14 G Steel C	N9, T	11'-4''	E	26	27	30	31	10'-8''	E	26	26	29	31	10'-2''	E	26	26	29	30
12 G Steel C	N9, T	17'-6''	G	30	30	33	35	16'-7''	G	30	29	32	34	15'-11''	G	30	29	32	34
Double 16 G Steel C	N9, N25, T	18'-11''	G	30	31	34	36	18'-1''	H1	31	30	33	35	17'-5''	H1	31	30	33	35
Double 14 G Steel C	N9, N25, T	22'-0''	H1	32	31	35	37	21'-1''	H1	33	31	35	37	20'-4''	H1	33	31	34	36
Double 12 G Steel C	N9, N25, T	26'-6''	H1	34	33	37	39	25'-10''	H2	35	33	36	38	25'-2''	H2	35	33	36	38
Steel Cloverleaf	W	5'-8''	A2	21	21	24	25	5'-4''	A2	21	22	24	26	5'-1''	A2	21	22	25	26
DBL Steel Cloverleaf	AA	10'-1''	D	25	21	24	25	9'-8''	D	25	22	24	26	9'-4''	E	25	22	25	26
4x3 I Beam	Y	7'-10''	A3	23	21	24	25	7'-5''	C	23	22	24	26	7'-1''	C	23	22	25	26
7x4 I Beam	Q	13'-7''	E	27	26	29	31	11'-10''	E	27	26	29	31	11'-3''	E	27	26	28	30

Header	Detail	trib 7.5'	Min Post Type	Uplift Footing (in)	cubic footing "d" Constrained Footing (in) Max Post Length 8'	12'	15'	trib 8'	Min Post Type	Uplift Footing (in)	cubic footing "d" Constrained Footing (in) Max Post Length 8'	12'	15'
On Slab	On Slab	n/a	A2					n/a	A2				
0.042"x3"x8"	N30	4'-11''	A2	21	23	26	27	4'-8''	A2	21	23	26	27
Double 3"x8"	N25	7'-11''	D	25	24	27	29	7'-7''	D	25	24	27	29
Double 2"x6.625"	N25	7'-3''	D	24	23	25	27	7'-0''	D	24	23	26	27
5.5" Extruded Fascia	L	6'-9''	C	23	23	25	27	6'-6''	C	24	23	26	27
California Fascia	N10, G	5'-8''	A3	22	23	25	27	5'-4''	A3	22	23	26	27
Classic Fascia	H	10'-7''	E	27	24	27	28	10'-4''	E	28	24	26	28
16 G Steel C	N9, T	7'-3''	C	24	24	26	28	6'-9''	C	24	23	26	27
14 G Steel C	N9, T	9'-7''	E	26	26	28	30	9'-1''	E	26	25	28	30
12 G Steel C	N9, T	15'-1''	G	31	29	32	34	14'-5''	G	31	28	31	33
Double 16 G Steel C	N9, N25, T	16'-8''	H1	32	29	33	34	16'-1''	H1	32	29	32	34
Double 14 G Steel C	N9, N25, T	19'-7''	H1	33	31	34	36	18'-11''	H1	34	30	34	36
Double 12 G Steel C	N9, N25, T	24'-8''	H2	36	32	36	38	24'-1''	H2	36	32	36	38
Steel Cloverleaf	W	4'-10''	A2	21	23	25	27	4'-7''	A2	21	23	26	27
DBL Steel Cloverleaf	AA	9'-0''	E	26	23	25	27	8'-8''	E	26	23	26	27
4x3 I Beam	Y	6'-8''	C	23	23	25	27	6'-4''	C	23	23	26	27
7x4 I Beam	Q	10'-8''	E	27	25	28	30	10'-1''	E	27	25	28	29

Amerimax Exterior Home Products
28921 US Hwy 74
Romoland, CA 92585

Carl Putnam, P. E.
3441 Ivylink Place
Lynchburg, VA 24503
carlputnam@comcast.net

Registered Professional Engineer (Civil) CERTIFICATE NO. 39702 CARL PUTNAM Date Signed ARIZONA U.S.A. Expires 09/30/2024

JAN 20 2023

Roof Solidity: 100%

Ground Snow Load: 20 psf **Live Load: 20 psf** **Wind Speed: 115 MPH EXPOSURE C or 130 MPH EXPOSURE B** **Seismic Ss= 100%** **Seismic Design Category D** **Structures are Attached to Existing Building**

Table 5.18a (cubic footing "d" — Constrained Footing (in), Max Post Length 8' / 12' / 15')

Header	Detail	trib 3'	Min Post Type	Uplift Footing (in)	8'	12'	15'	trib 3.5'	Min Post Type	Uplift Footing (in)	8'	12'	15'	trib 4'	Min Post Type	Uplift Footing (in)	8'	12'	15'	trib 4.5'	Min Post Type	Uplift Footing (in)	8'	12'	15'
On Slab	On Slab	11'-10"	A2					10'-2"	A2					8'-11"	A2					7'-11"	A2				
0.042"x3"x8"	N30	9'-3"	A1	22	19	21	22	8'-4"	A1	23	20	22	23	7'-8"	A1	23	20	23	24	7'-1"	A1	23	21	23	25
Double 3"x8"	N25	13'-10"	A3	26	19	21	22	12'-7"	A3	26	20	22	23	11'-9"	A3	27	20	23	24	10'-11"	C	27	21	23	25
Double 2"x6.625"	N25	12'-4"	A2	25	19	21	22	11'-3"	A2	25	20	22	23	10'-7"	A3	26	20	23	24	9'-10"	A3	26	21	23	25
5.5" Extruded Fascia	L	11'-10"	A2	24	19	21	22	10'-9"	A2	25	20	22	23	10'-0"	A2	25	20	23	24	9'-3"	A3	26	21	23	25
California Fascia	N10, G	10'-3"	A1	23	19	21	22	9'-4"	A1	24	20	22	23	8'-7"	A2	24	20	23	24	7'-11"	A2	24	21	23	25
Classic Fascia	H	14'-3"	A3	26	19	21	22	13'-6"	A3	27	20	22	23	13'-0"	C	28	20	23	24	12'-6"	D	28	21	23	25
16 G Steel C	N9, T	15'-3"	A3	26	19	21	22	13'-7"	A3	27	20	22	23	12'-6"	C	27	20	23	24	11'-5"	C	27	21	23	25
14 G Steel C	N9, T	18'-6"	D	28	19	21	22	16'-7"	D	29	20	22	23	15'-3"	D	29	20	23	24	13'-11"	D	29	21	23	25
12 G Steel C	N9, T	26'-4"	E	32	19	21	22	24'-8"	F	33	20	22	23	22'-10"	F	33	20	23	24	21'-2"	G	34	21	23	25
Double 16 G Steel C	N9, N25, T	25'-5"	E	31	19	21	22	24'-2"	E	32	20	22	23	23'-2"	F	33	20	23	24	22'-1"	G	34	21	23	25
Double 14 G Steel C	N9, N25, T	27'-9"	E	32	19	21	22	26'-5"	F	33	20	22	23	25'-3"	G	34	20	23	24	24'-4"	G	35	21	23	25
Double 12 G Steel C	N9, N25, T	33'-3"	G	34	19	22	23	31'-7"	G	36	20	22	23	30'-3"	H1	37	20	23	24	29'-2"	H1	38	21	23	25
Steel Cloverleaf	W	9'-0"	A1	22	19	21	22	8'-1"	A1	23	20	22	23	7'-6"	A1	23	20	23	24	6'-11"	A1	23	21	23	25
DBL Steel Cloverleaf	AA	12'-10"	A2	25	19	21	22	12'-3"	A3	26	20	22	23	11'-8"	A3	27	20	23	24	11'-3"	C	27	21	23	25
4x3 I Beam	Y	10'-1"	A1	23	19	21	22	9'-9"	A2	24	20	22	23	9'-5"	A2	25	20	23	24	9'-1"	A3	25	21	23	25
7x4 I Beam	Q	14'-4"	A3	26	19	21	22	13'-9"	B	27	20	22	23	13'-3"	C	28	20	23	24	12'-11"	D	29	21	23	25

Header	Detail	trib 5'	Min Post Type	Uplift Footing (in)	8'	12'	15'	trib 5.5'	Min Post Type	Uplift Footing (in)	8'	12'	15'	trib 6'	Min Post Type	Uplift Footing (in)	8'	12'	15'	trib 6.5'	Min Post Type	Uplift Footing (in)	8'	12'	15'
On Slab	On Slab	7'-1"	A2					6'-5"	A2					5'-11"	A2					5'-5"	A1				
0.042"x3"x8"	N30	6'-8"	A1	24	22	24	25	6'-2"	A2	24	22	25	26	5'-10"	A2	24	23	25	27	5'-6"	A2	24	23	26	27
Double 3"x8"	N25	10'-4"	C	28	22	24	25	9'-8"	C	28	22	25	26	9'-3"	D	28	23	25	27	8'-9"	D	28	23	26	27
Double 2"x6.625"	N25	9'-4"	A3	27	22	24	25	8'-9"	B	27	22	25	26	8'-5"	C	27	23	25	27	8'-0"	C	28	23	26	27
5.5" Extruded Fascia	L	8'-9"	A3	26	22	24	25	8'-3"	A3	26	22	25	26	7'-10"	A3	27	23	25	27	7'-5"	B	27	23	26	27
California Fascia	N10, G	7'-6"	A2	25	22	24	25	7'-0"	A2	25	22	25	26	6'-8"	A2	25	23	25	27	6'-3"	A3	25	23	26	27
Classic Fascia	H	12'-1"	D	29	22	24	25	11'-8"	E	30	22	25	26	11'-4"	E	30	23	25	27	11'-1"	E	31	23	26	27
16 G Steel C	N9, T	10'-7"	C	28	22	24	25	9'-10"	C	28	22	25	26	9'-2"	C	28	23	25	27	8'-5"	C	28	23	26	27
14 G Steel C	N9, T	13'-0"	E	30	22	24	25	12'-2"	E	30	22	25	26	11'-5"	E	30	23	25	27	10'-9"	E	31	23	26	27
12 G Steel C	N9, T	19'-11"	G	34	22	24	25	18'-7"	G	35	22	25	26	17'-8"	G	35	23	25	27	16'-9"	G	35	23	26	27
Double 16 G Steel C	N9, N25, T	21'-0"	G	35	22	24	25	19'-10"	G	35	22	25	26	19'-0"	G	36	23	25	27	18'-2"	G	36	23	26	27
Double 14 G Steel C	N9, N25, T	23'-6"	G	36	22	24	25	22'-9"	H1	37	22	25	26	22'-2"	H1	38	23	25	27	21'-2"	H1	38	23	26	27
Double 12 G Steel C	N9, N25, T	28'-2"	H1	38	22	24	25	27'-3"	H1	39	22	25	26	26'-6"	H1	40	23	25	27	25'-10"	H2	41	23	26	27
Steel Cloverleaf	W	6'-5"	A1	24	22	24	25	6'-0"	A1	24	22	25	26	5'-8"	A2	24	23	25	27	5'-5"	A2	24	23	26	27
DBL Steel Cloverleaf	AA	10'-11"	C	28	22	24	25	10'-7"	D	29	22	25	26	10'-2"	D	29	23	25	27	9'-9"	D	29	23	26	27
4x3 I Beam	Y	8'-8"	A3	26	22	24	25	8'-2"	A3	26	22	25	26	7'-11"	A3	27	23	25	27	7'-6"	C	27	23	26	27
7x4 I Beam	Q	12'-7"	D	29	22	24	25	12'-4"	E	30	22	25	26	12'-0"	E	31	23	25	27	11'-9"	E	31	23	26	27

Header	Detail	trib 7'	Min Post Type	Uplift Footing (in)	8'	12'	15'	trib 7.5'	Min Post Type	Uplift Footing (in)	8'	12'	15'	trib 8'	Min Post Type	Uplift Footing (in)	8'	12'	15'
On Slab	On Slab	5'-1"	A2					4'-9"	A2					4'-5"	A2				
0.042"x3"x8"	N30	5'-3"	A2	25	24	26	28	4'-11"	A2	25	24	27	28	4'-9"	A2	25	24	27	29
Double 3"x8"	N25	8'-5"	D	29	24	26	28	8'-0"	D	29	24	27	28	7'-8"	D	29	24	27	29
Double 2"x6.625"	N25	7'-8"	C	28	24	26	28	7'-4"	C	28	24	27	28	7'-1"	D	28	24	27	29
5.5" Extruded Fascia	L	7'-1"	C	27	24	26	28	6'-10"	C	27	24	27	28	6'-6"	C	28	24	27	29
California Fascia	N10, G	6'-0"	A3	26	24	26	28	5'-8"	A3	26	24	27	28	5'-5"	A3	26	24	27	29
Classic Fascia	H	10'-9"	E	31	24	26	28	10'-7"	E	32	24	27	28	10'-4"	E	32	24	27	29
16 G Steel C	N9, T	7'-10"	C	28	24	26	28	7'-4"	C	28	24	27	28	6'-10"	C	28	24	27	29
14 G Steel C	N9, T	10'-3"	E	31	24	26	28	9'-8"	E	31	24	27	28	9'-3"	E	31	24	27	29
12 G Steel C	N9, T	16'-0"	G	36	24	26	28	15'-3"	G	36	24	27	28	14'-8"	G	36	24	27	29
Double 16 G Steel C	N9, N25, T	17'-6"	H1	37	24	26	28	16'-10"	H1	37	24	27	28	16'-3"	H1	37	24	27	29
Double 14 G Steel C	N9, N25, T	20'-5"	H1	39	24	26	28	19'-8"	H1	39	24	27	28	19'-1"	H1	40	24	27	29
Double 12 G Steel C	N9, N25, T	25'-2"	H2	41	24	26	28	24'-8"	H2	42	24	27	28	24'-1"	H2	43	24	27	29
Steel Cloverleaf	W	5'-2"	A2	24	24	26	28	4'-10"	A2	25	24	27	28	4'-8"	A2	25	24	27	29
DBL Steel Cloverleaf	AA	9'-5"	E	30	24	26	28	9'-1"	E	30	24	27	28	8'-9"	E	31	24	27	29
4x3 I Beam	Y	7'-2"	C	27	24	26	28	6'-9"	C	27	24	27	28	6'-5"	C	28	24	27	29
7x4 I Beam	Q	11'-4"	E	32	24	26	28	10'-9"	E	32	24	27	28	10'-3"	E	32	24	27	29

(Footing (in), Max Post Length 8' / 12' / 15')

Header	Detail	trib 8.5'	Min Post Type	Uplift Footing (in)	8'	12'	15'	trib 9'	Min Post Type	Uplift Footing (in)	8'	12'	15'	trib 10'	Min Post Type	Uplift Footing (in)	8'	12'	15'	trib 10.5'	Min Post Type	Uplift Footing (in)	8'	12'	15'
On Slab	On Slab	4'-2"	A2					3'-11"	A2					3'-6"	A2					3'-4"	A2				
0.042"x3"x8"	N30	4'-6"	A2	25	25	28	29	4'-4"	A2	25	25	28	30	3'-11"	A2	25	26	29	30	3'-10"	A3	25	26	29	31
Double 3"x8"	N25	7'-4"	D	29	25	28	29	7'-1"	E	30	25	28	30	6'-8"	E	30	26	29	30	6'-5"	E	30	26	29	31
Double 2"x6.625"	N25	6'-9"	D	29	25	28	29	6'-7"	D	29	25	28	30	6'-2"	D	29	26	29	30	6'-0"	D	29	26	29	31
5.5" Extruded Fascia	L	6'-3"	C	28	25	28	29	6'-1"	C	28	25	28	30	5'-8"	D	28	26	29	30	5'-6"	D	29	26	29	31
California Fascia	N10, G	5'-2"	A3	26	25	28	29	5'-0"	A3	26	25	28	30	4'-8"	A3	27	26	29	30	4'-6"	A3	27	26	29	31
Classic Fascia	H	10'-1"	F	33	25	28	29	9'-11"	F	33	25	28	30	9'-7"	G	34	26	29	30	9'-5"	G	34	26	29	31
16 G Steel C	N9, T	6'-5"	C	28	25	28	29	6'-1"	C	28	25	28	30	5'-6"	C	28	26	29	30	5'-3"	D	28	26	29	31
14 G Steel C	N9, T	8'-8"	E	31	25	28	29	8'-3"	E	31	25	28	30	7'-5"	E	31	26	29	30	7'-1"	E	31	26	29	31
12 G Steel C	N9, T	14'-0"	H1	36	25	28	29	13'-6"	H1	37	25	28	30	12'-7"	H1	37	26	29	30	12'-2"	H1	37	26	29	31
Double 16 G Steel C	N9, N25, T	15'-8"	H1	38	25	28	29	15'-3"	H1	38	25	28	30	14'-4"	H1	39	26	29	30	14'-0"	H1	39	26	29	31
Double 14 G Steel C	N9, N25, T	18'-5"	H1	40	25	28	29	17'-11"	H1	40	25	28	30	16'-11"	H2	41	26	29	30	16'-7"	H2	41	26	29	31
Double 12 G Steel C	N9, N25, T	23'-8"	H3	43	25	28	29	23'-2"	H3	44	25	28	30	22'-5"	H3	45	26	29	30	22'-0"	H3	45	26	29	31
Steel Cloverleaf	W	4'-6"	A2	25	25	28	29	4'-4"	A2	25	25	28	30	4'-0"	A2	25	26	29	30	3'-10"	A3	25	26	29	31
DBL Steel Cloverleaf	AA	8'-6"	E	31	25	28	29	8'-3"	E	31	25	28	30	7'-10"	E	32	26	29	30	7'-8"	E	32	26	29	31
4x3 I Beam	Y	6'-1"	C	28	25	28	29	5'-10"	C	28	25	28	30	5'-5"	C	28	26	29	30	5'-2"	C	28	26	29	31
7x4 I Beam	Q	9'-9"	E	32	25	28	29	9'-4"	E	32	25	28	30	8'-7"	F	33	26	29	30	8'-3"	F	33	26	29	31

Header	Detail	trib 11'	Min Post Type	Uplift Footing (in)	8'	12'	15'	trib 11.5'	Min Post Type	Uplift Footing (in)	8'	12'	15'	trib 12'	Min Post Type	Uplift Footing (in)	8'	12'	15'
On Slab	On Slab	3'-2"	A2					3'-1"	A2					2'-11"	A2				
0.042"x3"x8"	N30	3'-8"	A3	25	27	29	31	3'-6"	A3	26	27	30	31	3'-5"	A3	26	27	30	32
Double 3"x8"	N25	6'-2"	E	30	27	29	31	6'-0"	E	30	27	30	31	5'-10"	E	31	27	30	32
Double 2"x6.625"	N25	5'-9"	D	30	27	29	31	5'-8"	E	30	27	30	31	5'-6"	E	30	27	30	32
5.5" Extruded Fascia	L	5'-4"	D	29	27	29	31	5'-2"	D	29	27	30	31	5'-0"	D	29	27	30	32
California Fascia	N10, G	4'-4"	B	27	27	29	31	4'-2"	B	27	27	30	31	4'-1"	C	27	27	30	32
Classic Fascia	H	9'-3"	G	35	27	29	31	9'-0"	G	35	27	30	31	8'-9"	G	35	27	30	32
16 G Steel C	N9, T	5'-0"	C	28	27	29	31	4'-9"	D	28	27	30	31	4'-7"	C	28	27	30	32
14 G Steel C	N9, T	6'-9"	E	31	27	29	31	6'-6"	E	31	27	30	31	6'-2"	E	31	27	30	32
12 G Steel C	N9, T	11'-9"	H1	37	27	29	31	11'-5"	H1	38	27	30	31	11'-1"	H1	38	27	30	32
Double 16 G Steel C	N9, N25, T	13'-7"	H1	39	27	29	31	13'-3"	H1	40	27	30	31	12'-11"	H1	40	27	30	32
Double 14 G Steel C	N9, N25, T	16'-1"	H2	42	27	29	31	15'-9"	H2	42	27	30	31	15'-5"	H2	42	27	30	32
Double 12 G Steel C	N9, N25, T	21'-8"	H4	46	27	29	31	21'-3"	H4	46	27	30	31	20'-9"	H4	47	27	30	32
Steel Cloverleaf	W	3'-9"	A3	26	27	29	31	3'-7"	A3	26	27	30	31	3'-6"	A3	26	27	30	32
DBL Steel Cloverleaf	AA	7'-5"	E	32	27	29	31	7'-4"	E	32	27	30	31	7'-2"	F	33	27	30	32
4x3 I Beam	Y	5'-0"	C	28	27	29	31	4'-10"	D	28	27	30	31	4'-8"	D	28	27	30	32
7x4 I Beam	Q	7'-11"	F	33	27	29	31	7'-8"	F	33	27	30	31	7'-4"	F	33	27	30	32

Header	Detail	trib 13'	Min Post Type	Uplift Footing (in)	8'	12'	15'	trib 14'	Min Post Type	Uplift Footing (in)	8'	12'	15'	trib 15'	Min Post Type	Uplift Footing (in)	8'	12'	15'
On Slab	On Slab	2'-8"	A2					2'-6"	A2					2'-4"	A2				
0.042"x3"x8"	N30	3'-2"	A3	26	28	31	32	3'-0"	A3	26	28	31	33	2'-10"	A3	26	29	32	34
Double 3"x8"	N25	5'-6"	E	31	28	31	32	5'-3"	E	31	28	31	33	4'-11"	E	31	29	32	34
Double 2"x6.625"	N25	5'-2"	E	30	28	31	32	4'-11"	E	30	28	31	33	4'-8"	E	31	29	32	34
5.5" Extruded Fascia	L	4'-9"	D	29	28	31	32	4'-6"	D	29	28	31	33	4'-3"	E	30	29	32	34
California Fascia	N10, G	3'-10"	C	27	28	31	32	3'-7"	C	27	28	31	33	3'-5"	C	28	29	32	34
Classic Fascia	H	8'-5"	G	35	28	31	32	8'-1"	G	36	28	31	33	7'-9"	G	36	29	32	34
16 G Steel C	N9, T	4'-3"	C	28	28	31	32	3'-11"	C	28	28	31	33	3'-8"	C	28	29	32	34
14 G Steel C	N9, T	5'-8"	E	31	28	31	32	5'-4"	E	31	28	31	33	4'-11"	E	31	29	32	34
12 G Steel C	N9, T	10'-6"	H1	38	28	31	32	9'-11"	H1	38	28	31	33	9'-6"	H1	39	29	32	34
Double 16 G Steel C	N9, N25, T	12'-4"	H1	40	28	31	32	11'-10"	H2	41	28	31	33	11'-4"	H2	41	29	32	34
Double 14 G Steel C	N9, N25, T	14'-8"	H2	43	28	31	32	14'-1"	H2	43	28	31	33	13'-6"	H3	43	29	32	34
Double 12 G Steel C	N9, N25, T	20'-0"	H4	47	28	31	32	19'-3"	H4	48	28	31	33	18'-7"	H5	48	29	32	34
Steel Cloverleaf	W	3'-3"	A3	26	28	31	32	3'-1"	A3	26	28	31	33	2'-11"	A3	26	29	32	34
DBL Steel Cloverleaf	AA	6'-10"	F	33	28	31	32	6'-7"	F	33	28	31	33	6'-4"	G	34	29	32	34
4x3 I Beam	Y	4'-4"	D	28	28	31	32	4'-1"	D	29	28	31	33	3'-10"	D	29	29	32	34
7x4 I Beam	Q	6'-10"	F	33	28	31	32	6'-5"	F	33	28	31	33	6'-1"	F	33	29	32	34

Ground Snow Load: 20 psf **Live Load: 20 psf** **Wind Speed: 115 MPH EXPOSURE C or 140 MPH EXPOSURE B** **Seismic Ss= 100%** **Seismic Design Category D** **Freestanding Structures**

Table 5.18b (cubic footing "d" — Constrained Footing (in), Max Post Length 8' / 12' / 15')

Header	Detail	trib 3'	Min Post Type	Uplift Footing (in)	8'	12'	15'	trib 3.5'	Min Post Type	Uplift Footing (in)	8'	12'	15'	trib 4'	Min Post Type	Uplift Footing (in)	8'	12'	15'	trib 4.5'	Min Post Type	Uplift Footing (in)	8'	12'	15'
On Slab	On Slab	n/a	A2					n/a	A2					n/a	A2					n/a	A2				
0.042"x3"x8"	N30	8'-11"	A1	20	26	28	30	8'-1"	A1	20	25	28	29	7'-5"	A1	20	24	27	29	6'-10"	A1	20	24	27	28
Double 3"x8"	N25	13'-5"	A3	22	28	31	33	12'-4"	A3	23	28	31	33	11'-4"	B	23	27	30	32	10'-7"	C	24	27	30	31
Double 2"x6.625"	N25	12'-0"	A2	22	26	29	31	11'-0"	A3	22	26	29	30	10'-3"	A3	22	25	28	30	9'-7"	A3	23	25	28	29
5.5" Extruded Fascia	L	11'-6"	A2	21	25	28	29	10'-6"	A2	22	24	27	28	9'-8"	A3	22	24	26	28	9'-0"	A3	22	23	26	27
California Fascia	N10, G	10'-0"	A1	20	23	25	27	9'-1"	A1	21	22	25	26	8'-4"	A2	21	22	24	26	7'-8"	A2	21	21	24	25
Classic Fascia	H	14'-3"	A3	23	27	29	31	13'-6"	C	24	26	29	31	13'-0"	C	24	26	29	30	12'-6"	D	25	26	28	30
16 G Steel C	N9, T	14'-9"	A3	23	29	32	34	13'-2"	B	23	28	31	33	12'-0"	C	24	28	31	32	11'-0"	C	24	27	30	32
14 G Steel C	N9, T	17'-10"	D	25	31	34	36	16'-1"	D	25	30	33	35	14'-8"	D	25	29	32	34	13'-6"	D	26	28	32	33
12 G Steel C	N9, T	26'-4"	E	28	34	37	40	24'-0"	F	29	33	36	39	22'-1"	F	29	32	36	38	20'-6"	G	29	32	35	37
Double 16 G Steel C	N9, N25, T	25'-5"	E	28	33	37	39	24'-2"	F	29	33	37	39	22'-11"	G	29	33	36	38	21'-6"	G	30	32	35	38
Double 14 G Steel C	N9, N25, T	27'-9"	F	28	34	38	40	26'-5"	G	29	34	37	40	25'-3"	G	30	33	37	39	24'-4"	G	31	33	37	39
Double 12 G Steel C	N9, N25, T	33'-3"	G	30	36	40	42	31'-7"	G	31	35	39	41	30'-3"	H1	32	35	39	41	29'-2"	H1	33	35	38	41
Steel Cloverleaf	W	8'-8"	A1	19	20	22	23	7'-10"	A1	20	19	21	23	7'-2"	A1	20	20	22	23	6'-8"	A1	20	20	23	24
DBL Steel Cloverleaf	AA	12'-10"	A3	22	22	24	26	12'-3"	A3	23	22	24	25	11'-8"	C	23	21	24	25	11'-3"	C	24	21	23	25
4x3 I Beam	Y	10'-11"	A2	21	23	25	26	10'-1"	A2	21	22	25	26	9'-5"	A2	22	22	24	26	8'-10"	A3	22	21	24	25
7x4 I Beam	Q	15'-8"	C	24	29	32	34	15'-1"	D	24	28	31	33	14'-8"	D	25	28	31	33	14'-2"	E	26	28	31	33

Header	Detail	trib 5'	Min Post Type	Uplift Footing (in)	8'	12'	15'	trib 5.5'	Min Post Type	Uplift Footing (in)	8'	12'	15'	trib 6'	Min Post Type	Uplift Footing (in)	8'	12'	15'	trib 6.5'	Min Post Type	Uplift Footing (in)	8'	12'	15'
On Slab	On Slab	n/a	A2					n/a	A2					n/a	A2					n/a	A2				
0.042"x3"x8"	N30	6'-4"	A1	21	24	26	28	6'-0"	A2	21	23	26	27	5'-8"	A2	21	23	25	27	5'-4"	A2	21	22	25	26
Double 3"x8"	N25	9'-11"	C	24	26	29	31	9'-5"	C	24	26	29	30	8'-11"	D	25	26	28	30	8'-6"	D	25	25	28	30
Double 2"x6.625"	N25	9'-0"	A3	23	24	27	29	8'-7"	C	24	24	27	28	8'-2"	C	24	24	26	28	7'-9"	C	24	24	26	28
5.5" Extruded Fascia	L	8'-5"	A3	23	23	25	27	8'-0"	A3	23	23	25	27	7'-7"	B	23	22	25	26	7'-3"	C	24	22	25	26
California Fascia	N10, G	7'-2"	A2	22	21	23	25	6'-10"	A2	22	21	24	25	6'-5"	A3	22	22	24	26	6'-1"	A3	22	22	25	26
Classic Fascia	H	12'-1"	D	26	25	28	30	11'-8"	E	26	25	28	30	11'-4"	E	27	25	28	29	11'-1"	E	27	25	28	29
16 G Steel C	N9, T	10'-2"	C	24	26	29	31	9'-7"	D	24	26	29	31	8'-9"	C	24	25	28	30	8'-0"	C	24	25	28	29
14 G Steel C	N9, T	12'-6"	E	26	28	31	33	11'-9"	E	26	27	30	32	11'-1"	E	26	27	30	32	10'-5"	E	27	27	30	31
12 G Steel C	N9, T	19'-2"	G	30	31	34	36	18'-2"	G	30	31	34	36	17'-1"	G	31	30	33	35	16'-3"	G	31	30	33	35
Double 16 G Steel C	N9, N25, T	20'-4"	G	30	32	35	37	19'-5"	G	31	31	35	37	18'-6"	G	31	31	34	36	17'-9"	H1	32	30	34	36
Double 14 G Steel C	N9, N25, T	23'-6"	H1	32	33	36	38	22'-7"	H1	33	32	36	38	21'-7"	H1	33	32	36	38	20'-8"	H1	33	32	35	37
Double 12 G Steel C	N9, N25, T	28'-2"	H1	34	34	38	40	27'-3"	H1	35	34	38	40	26'-6"	H2	35	34	37	40	25'-10"	H2	36	34	37	39
Steel Cloverleaf	W	6'-2"	A1	20	21	23	25	5'-10"	A2	21	21	24	25	5'-6"	A2	21	22	24	26	5'-3"	A2	21	22	25	26
DBL Steel Cloverleaf	AA	10'-10"	D	25	21	23	25	10'-4"	D	25	21	24	25	9'-11"	D	25	22	24	26	9'-6"	E	26	22	25	26
4x3 I Beam	Y	8'-5"	A3	23	21	23	25	8'-0"	A3	23	21	24	25	7'-8"	B	23	22	24	26	7'-3"	C	24	22	25	26
7x4 I Beam	Q	13'-11"	E	27	28	31	32	13'-1"	E	27	27	30	32	12'-3"	E	27	27	30	31	11'-6"	E	27	26	29	31

Header	Detail	trib 7'	Min Post Type	Uplift Footing (in)	8'	12'	15'	trib 7.5'	Min Post Type	Uplift Footing (in)	8'	12'	15'	trib 8'	Min Post Type	Uplift Footing (in)	8'	12'	15'
On Slab	On Slab	n/a	A2					n/a	A2					n/a	A2				
0.042"x3"x8"	N30	5'-0"	A2	21	23	25	27	4'-9"	A2	21	23	26	27	4'-7"	A2	22	24	26	28
Double 3"x8"	N25	8'-1"	D	25	25	28	29	7'-9"	D	25	25	27	29	7'-6"	D	25	24	27	29
Double 2"x6.625"	N25	7'-5"	C	24	23	26	27	7'-1"	D	25	23	26	27	6'-10"	D	25	24	26	28
5.5" Extruded Fascia	L	6'-11"	C	24	23	25	27	6'-7"	C	24	23	26	27	6'-4"	C	24	24	26	28
California Fascia	N10, G	5'-9"	A3	22	23	25	27	5'-6"	A3	23	23	26	27	5'-3"	A3	23	24	26	28
Classic Fascia	H	10'-9"	E	28	25	27	29	10'-7"	E	28	25	27	29	10'-4"	F	28	24	27	29
16 G Steel C	N9, T	7'-5"	C	24	24	27	29	6'-11"	C	24	24	27	28	6'-7"	D	24	24	26	28
14 G Steel C	N9, T	9'-10"	E	27	26	29	31	9'-4"	E	27	26	29	30	8'-10"	E	27	26	28	30
12 G Steel C	N9, T	15'-5"	G	31	29	33	35	14'-9"	G	31	29	32	34	14'-2"	H1	32	29	32	34
Double 16 G Steel C	N9, N25, T	17'-0"	H1	32	30	33	35	16'-4"	H1	32	30	33	35	15'-10"	H1	33	30	33	35
Double 14 G Steel C	N9, N25, T	19'-11"	H1	34	31	35	37	19'-2"	H1	34	31	34	36	18'-7"	H1	35	31	34	36
Double 12 G Steel C	N9, N25, T	25'-2"	H2	37	33	37	39	24'-8"	H2	37	33	37	39	24'-1"	H3	38	33	37	39
Steel Cloverleaf	W	4'-11"	A2	21	23	25	27	4'-8"	A2	21	23	26	27	4'-6"	A2	22	24	26	28
DBL Steel Cloverleaf	AA	9'-2"	E	26	23	25	27	8'-10"	E	26	23	26	27	8'-7"	E	27	24	26	28
4x3 I Beam	Y	6'-10"	C	24	23	25	27	6'-6"	C	24	23	26	27	6'-2"	C	24	24	26	28
7x4 I Beam	Q	10'-11"	E	28	26	29	31	10'-4"	E	28	26	28	30	9'-10"	E	28	25	28	30

(Footing (in), Max Post Length 8' / 12' / 15')

Header	Detail	trib 8.5'	Min Post Type	Uplift Footing (in)	8'	12'	15'	trib 9'	Min Post Type	Uplift Footing (in)	8'	12'	15'	trib 10'	Min Post Type	Uplift Footing (in)	8'	12'	15'	trib 10.5'	Min Post Type	Uplift Footing (in)	8'	12'	15'
On Slab	On Slab	n/a	A2					n/a	A2					n/a	A2					n/a	A2				
0.042"x3"x8"	N30	4'-4"	A2	22	24	27	28	4'-2"	A2	22	24	27	29	3'-9"	A2	22	25	28	29	3'-8"	A3	22	25	28	30
Double 3"x8"	N25	7'-2"	E	26	24	27	28	6'-11"	E	26	24	27	29	6'-5"	E	26	25	28	29	6'-2"	E	26	25	28	30
Double 2"x6.625"	N25	6'-7"	D	25	24	27	28	6'-4"	D	25	24	27	29	5'-11"	D	25	25	28	29	5'-9"	E	26	25	28	30
5.5" Extruded Fascia	L	6'-1"	C	24	24	27	28	5'-10"	D	24	24	27	29	5'-6"	D	25	25	28	29	5'-4"	D	25	25	28	30
California Fascia	N10, G	5'-0"	A3	23	24	27	28	4'-10"	A3	23	24	27	29	4'-6"	A3	23	25	28	29	4'-4"	B	23	25	28	30
Classic Fascia	H	10'-1"	F	29	24	27	29	9'-11"	G	29	24	27	29	9'-5"	G	30	25	28	29	9'-3"	G	30	25	28	30
16 G Steel C	N9, T	6'-2"	C	24	24	27	28	5'-10"	C	24	24	27	29	5'-2"	C	24	25	28	29	5'-0"	D	24	25	28	30
14 G Steel C	N9, T	8'-4"	E	27	25	28	30	7'-10"	E	27	25	27	29	7'-1"	E	27	25	28	29	6'-9"	E	27	25	28	30
12 G Steel C	N9, T	13'-7"	H1	32	28	32	33	13'-1"	H1	32	28	31	33	12'-2"	H1	32	28	31	32	11'-9"	H1	32	27	30	32
Double 16 G Steel C	N9, N25, T	15'-4"	H1	33	29	33	34	14'-10"	H1	33	29	32	34	13'-11"	H1	34	29	32	34	13'-7"	H1	34	28	32	33
Double 14 G Steel C	N9, N25, T	18'-0"	H1	35	31	34	36	17'-5"	H1	35	30	34	36	16'-6"	H2	36	30	33	35	16'-1"	H2	36	30	33	35
Double 12 G Steel C	N9, N25, T	23'-8"	H3	38	33	36	38	23'-2"	H3	39	33	36	38	22'-2"	H3	39	32	36	38	21'-9"	H4	40	32	36	38
Steel Cloverleaf	W	4'-4"	A2	22	24	27	28	4'-2"	A2	22	24	27	29	3'-10"	A3	22	25	28	29	3'-9"	A3	22	25	28	30
DBL Steel Cloverleaf	AA	8'-4"	E	27	24	27	28	8'-1"	E	27	24	27	29	7'-7"	E	28	25	28	29	7'-5"	E	28	25	28	30
4x3 I Beam	Y	5'-11"	C	24	24	27	28	5'-8"	C	24	24	27	29	5'-2"	C	24	25	28	29	5'-0"	C	24	25	28	30
7x4 I Beam	Q	9'-5"	E	28	25	28	29	8'-11"	E	28	25	27	29	8'-2"	F	28	25	28	29	7'-11"	F	28	25	28	30

Header	Detail	trib 11'	Min Post Type	Uplift Footing (in)	8'	12'	15'	trib 11.5'	Min Post Type	Uplift Footing (in)	8'	12'	15'	trib 12'	Min Post Type	Uplift Footing (in)	8'	12'	15'
On Slab	On Slab	n/a	A2					n/a	A2					n/a	A2				
0.042"x3"x8"	N30	3'-6"	A3	22	26	28	30	3'-5"	A3	22	26	29	30	3'-3"	A3	22	26	29	31
Double 3"x8"	N25	6'-0"	E	26	26	28	30	5'-10"	E	26	26	29	30	5'-8"	E	27	26	29	31
Double 2"x6.625"	N25	5'-7"	E	26	26	28	30	5'-5"	E	26	26	29	30	5'-3"	E	26	26	29	31
5.5" Extruded Fascia	L	5'-2"	D	25	26	28	30	5'-0"	D	25	26	29	30	4'-10"	D	25	26	29	31
California Fascia	N10, G	4'-2"	B	23	26	28	30	4'-0"	C	23	26	29	30	3'-11"	C	24	26	29	31
Classic Fascia	H	9'-0"	G	30	26	28	30	8'-9"	G	30	26	29	30	8'-6"	G	31	26	29	31
16 G Steel C	N9, T	4'-9"	D	24	26	28	30	4'-6"	C	24	26	29	30	4'-4"	C	24	26	29	31
14 G Steel C	N9, T	6'-5"	E	27	26	28	30	6'-2"	E	27	26	29	30	5'-11"	E	27	26	29	31
12 G Steel C	N9, T	11'-5"	H1	33	27	30	32	11'-1"	H1	33	27	30	32	10'-9"	H1	33	27	30	31
Double 16 G Steel C	N9, N25, T	13'-3"	H1	34	28	31	33	12'-10"	H1	34	28	31	33	12'-7"	H1	35	28	31	33
Double 14 G Steel C	N9, N25, T	15'-8"	H2	36	30	33	35	15'-4"	H2	37	29	33	34	14'-11"	H2	37	29	32	34
Double 12 G Steel C	N9, N25, T	21'-2"	H4	40	32	35	37	20'-9"	H4	40	32	35	37	20'-3"	H4	41	32	35	37
Steel Cloverleaf	W	3'-7"	A3	22	26	28	30	3'-6"	A3	22	26	29	30	3'-4"	A3	22	26	29	31
DBL Steel Cloverleaf	AA	7'-3"	E	28	26	28	30	7'-1"	F	28	26	29	30	6'-11"	F	28	26	29	31
4x3 I Beam	Y	4'-9"	D	24	26	28	30	4'-7"	D	25	26	29	30	4'-5"	D	25	26	29	31
7x4 I Beam	Q	7'-7"	F	29	26	28	30	7'-4"	F	29	26	29	30	7'-0"	F	29	26	29	31

Header	Detail	trib 13'	Min Post Type	Uplift Footing (in)	8'	12'	15'	trib 14'	Min Post Type	Uplift Footing (in)	8'	12'	15'	trib 15'	Min Post Type	Uplift Footing (in)	8'	12'	15'
On Slab	On Slab	n/a	A2					n/a	A2					n/a	A2				
0.042"x3"x8"	N30	3'-1"	A3	22	27	30	31	2'-10"	A3	22	27	30	32	2'-8"	A3	22	28	31	32
Double 3"x8"	N25	5'-4"	E	27	27	30	31	5'-0"	E	27	27	30	32	4'-9"	E	27	28	31	32
Double 2"x6.625"	N25	5'-0"	E	26	27	30	31	4'-9"	E	26	27	30	32	4'-6"	E	27	28	31	32
5.5" Extruded Fascia	L	4'-7"	D	26	27	30	31	4'-4"	E	26	27	30	32	4'-2"	E	26	28	31	32
California Fascia	N10, G	3'-8"	C	24	27	30	31	3'-6"	C	24	27	30	32	3'-3"	C	24	28	31	32
Classic Fascia	H	8'-2"	G	31	27	30	31	7'-10"	G	31	27	30	32	7'-6"	H1	32	28	31	32
16 G Steel C	N9, T	4'-0"	D	24	27	30	31	3'-9"	C	24	27	30	32	3'-6"	C	24	28	31	32
14 G Steel C	N9, T	5'-5"	E	27	27	30	31	5'-1"	E	27	27	30	32	4'-8"	E	27	28	31	32
12 G Steel C	N9, T	10'-2"	H1	33	27	30	31	9'-7"	H1	33	27	30	32	9'-2"	H1	34	28	31	32
Double 16 G Steel C	N9, N25, T	12'-0"	H1	35	28	31	32	11'-6"	H2	35	27	30	32	11'-0"	H2	36	28	31	32
Double 14 G Steel C	N9, N25, T	14'-3"	H2	37	29	32	34	13'-8"	H3	38	29	32	33	13'-1"	H3	38	28	31	33
Double 12 G Steel C	N9, N25, T	19'-6"	H4	41	31	35	37	18'-9"	H4	42	31	34	36	18'-1"	H5	42	31	34	36
Steel Cloverleaf	W	3'-2"	A3	23	27	30	31	3'-0"	A3	23	27	30	32	2'-10"	A3	23	28	31	32
DBL Steel Cloverleaf	AA	6'-8"	F	29	27	30	31	6'-5"	G	29	27	30	32	6'-2"	G	30	28	31	32
4x3 I Beam	Y	4'-2"	D	25	27	30	31	3'-11"	D	25	27	30	32	3'-8"	D	25	28	31	32
7x4 I Beam	Q	6'-7"	F	29	27	30	31	6'-2"	F	29	27	30	32	5'-10"	F	29	28	31	32

Amerimax Exterior Home Products
28921 US Hwy 74
Romoland, CA 92585

Carl Putnam, P. E.
3441 Ivylink Place
Lynchburg, VA 24503
carlputnam@comcast.net

Registered Professional Engineer (Civil) — Certificate No. 39702 — CARL PUTNAM — Date Signed — ARIZONA, U.S.A. — Expires 09/30/2024

USE OF FOAM CORE SANDWICH PANELS WILL REQUIRE THE USE OF A REGISTERED DESIGN PROFESSIONAL TO COMPLY WITH EXISTING ICC ESR

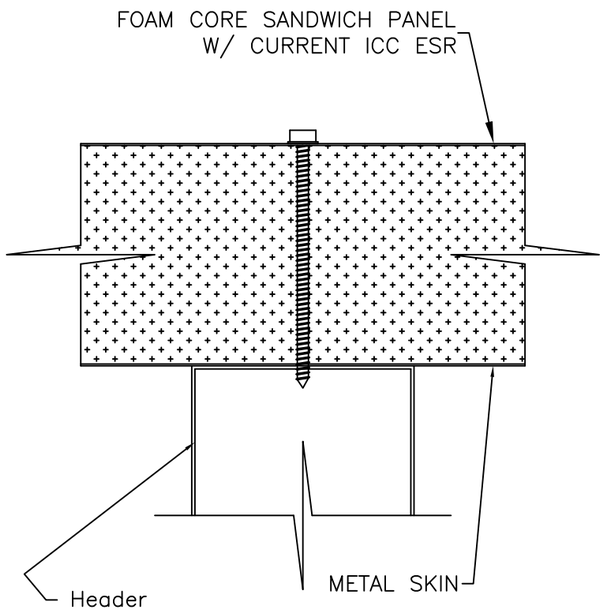

N1 SANDWICH PANEL TO HEADER CONNECTION

N2 2"x6" ALUM FLAT PANEL
t=0.018" 3004H36
t>0.018" 3004H34

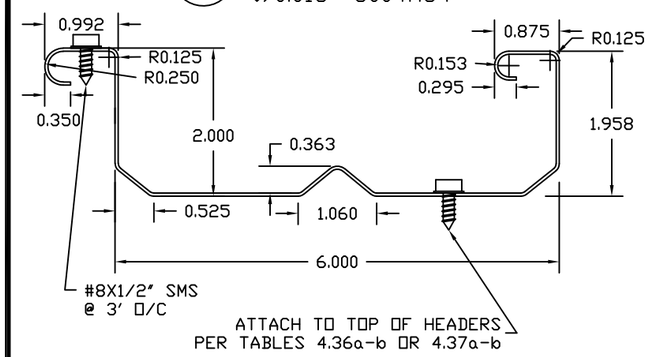

N3 2.5"x6" SUPER SIX
ALUM FLAT PANEL
t=0.018" 3004H36
t>0.018" 3004H34

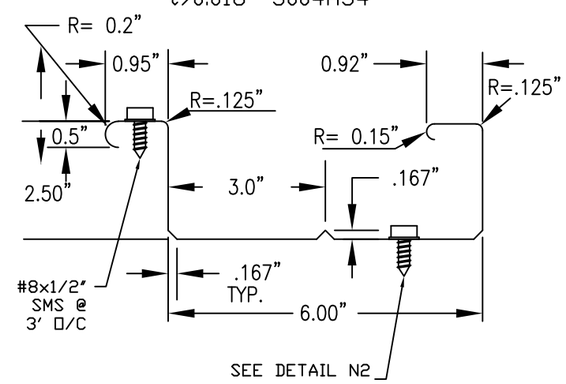

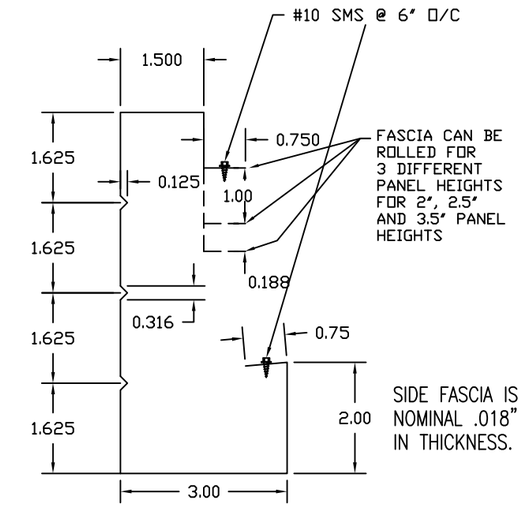

N4 6 1/2" ROLLFORMED SIDE FASCIA
(3105-H25 ALUM. ALLOY)

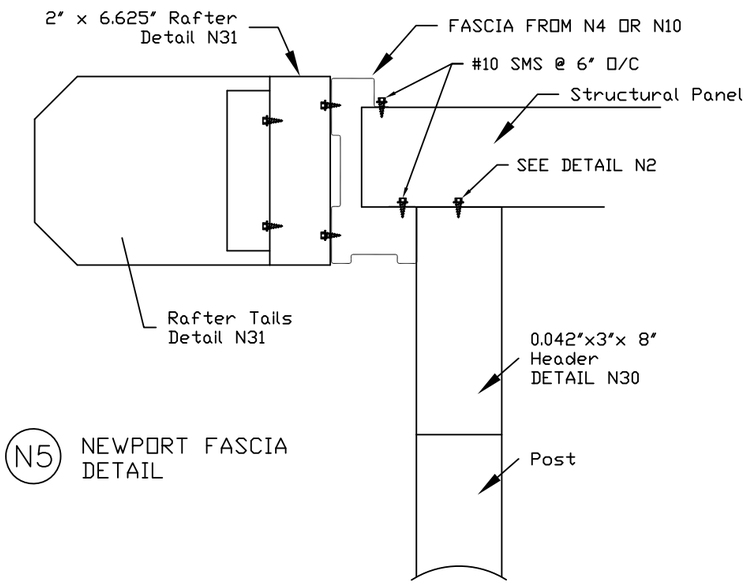

N5 NEWPORT FASCIA DETAIL

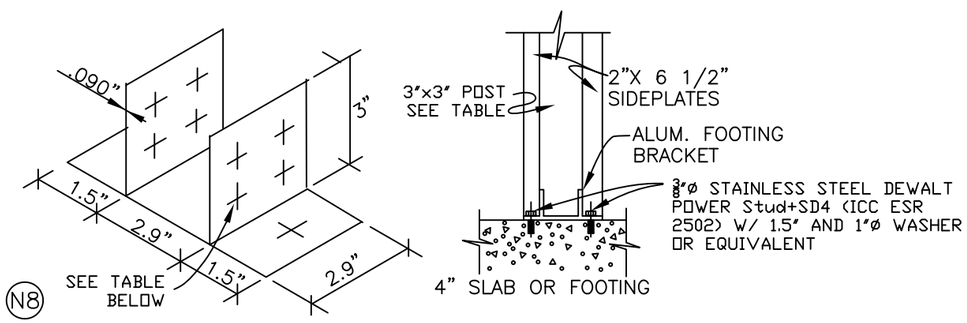

N8 BRACKET FOR CONNECTING POST TO SLAB OR FOOTING (6063-T6 ALUM ALLOY)
SINGLE SPAN ATTACHED UNITS ONLY

Footing d (in)	Number Of #14 SMS	3"x3" Post	Concrete Anchors	Maximum Wind Condition for "On Slab" Attachment
24	8	0.024" Alum	3/8"	100 mph Exp B/ 95 mph Exp C
26	10	0.024" Alum	3/8"	115 mph Exp B / 105 mph Exp C
27	8	0.032" Alum	3/8"	125 mph Exp B / 110 mph Exp C
28	4	0.041" Steel	3/8"	125 mph Exp B / 110 mph Exp C

Registered Professional Engineer (Civil)
CERTIFICATE NO. 39702
CARL PUTNAM
Date Signed
ARIZONA, U.S.A.
Expires 09/30/2024

JAN 20 2023

Amerimax EXTERIOR HOME PRODUCTS
28921 US Hwy 74
Romoland, CA 92585

DRAWN BY: BEJ/CP	TYPE:	
SCALE: NTS	NAME: Component Parts & Connection Details for Newport Patio Structures	
DATE:	FILE#: NP01-2021	SHEET: 1 of 4

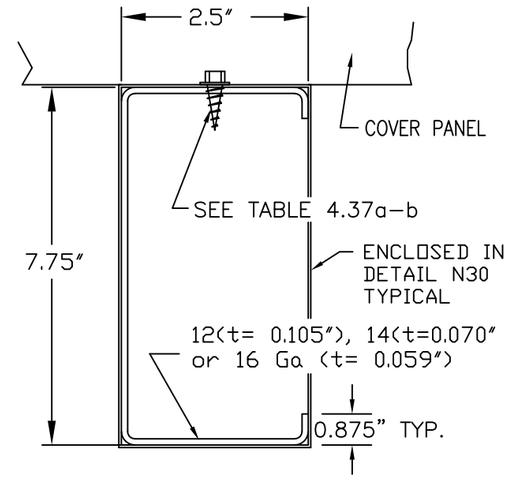

N9 STEEL "C"– CHANNEL HEADER
(STEEL A–653 Fy=50 KSI)

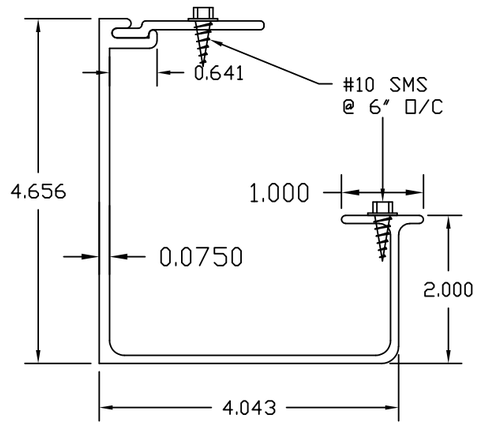

N10 CALIFORNIA FASCIA
(ALUM 6063 T6)

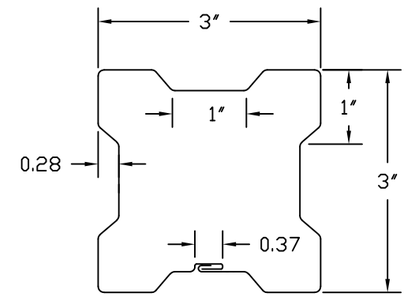

t= 0.030" ALUM
= 0.040" ALUM
= 0.041" STEEL

NOTE:
POSTS MAY BE TRIMMED w/FLEX ALUM. FACING.

N11 3" ALTERNATE POST
(3105–H25 ALUM. ALLOY OR A–653 Fy=40 KSI STEEL)

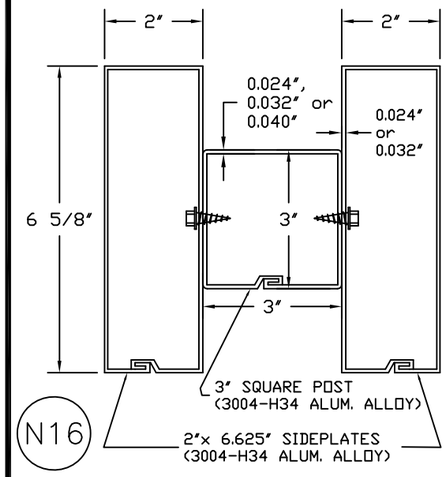

N16 SIDEPLATE CONNECTION DETAIL

Live Load (psf)	Wind Speed and Exposure	MAX "L" FOR TOP OR SIDE MOUNT 16" o/c	24"o/c
10	115 mph Exp B	15'-2"	10'-1"
	130 mph Exp B	13'-7"	9'-1"
	100 mph Exp C	15'-2"	10'-1"
	110 mph Exp C	14'-7"	9'-8"
	115 mph Exp C	13'-10"	9'-3"
	130 mph Exp C	12'-2"	8'-2"
20	115 mph Exp B	10'-3"	6'-9"
	100 mph Exp C	10'-3"	6'-9"
	110 mph Exp C	10'-0"	6'-8"
	115 mph Exp C	9'-8"	6'-6"
	130 mph Exp C	8'-9"	5'-10"

TOP MOUNT BRACKET NOT ALLOWED IN SNOW LOAD AREAS
SEE GENERAL NOTE #9 FOR CORROSION PROTECTION

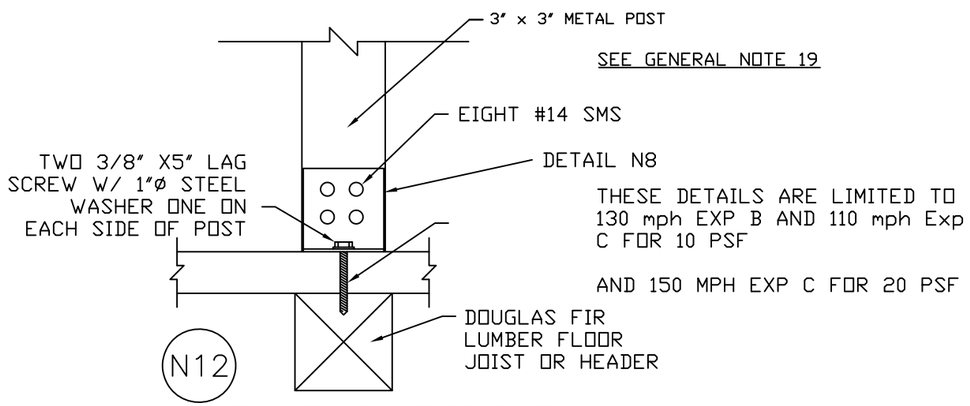

N12 ATTACHED STRUCTURE POST TO DECK FLOOR JOIST

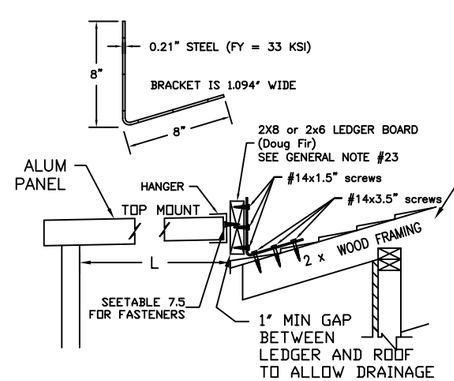

TOP MOUNT BRACKET

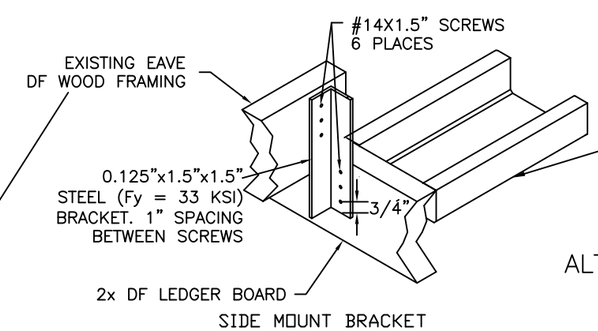

SIDE MOUNT BRACKET

EAVE OVERHANG AND "L" MUST ALSO COMPLY WITH DETAIL N21

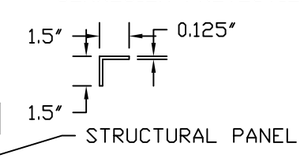

N18 ALTERNATIVE EAVE ATTACHMENT

ALL HOUSE PENETRATIONS MUST BE COMPLETELY AND PERMANENTLY SEALED

N14

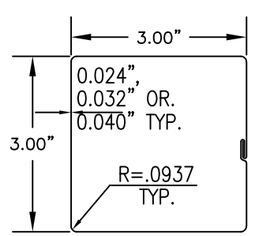

3" ALUM SQUARE POST
t =0.024" 3004H34
t =0.040" 3004H34

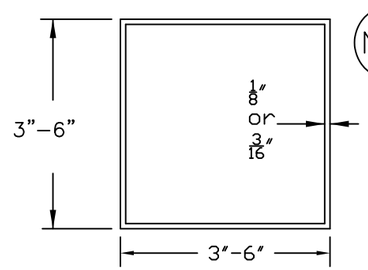

N17 ASTM A500 GRADE B STEEL POST SEE GENERAL NOTE #9 FOR CORROSION PROTECTION

Registered Professional Engineer (Civil) CERTIFICATE NO. 39702 CARL PUTNAM Date Signed ARIZONA U.S.A. Expires 09/30/2024

JAN 20 2023

Amerimax EXTERIOR HOME PRODUCTS
28921 US Hwy 74
Romoland, CA 92585

DRAWN BY: BEJ/CP	TYPE:
SCALE: NTS	NAME: Component Parts & Connection Details for Newport Patio Structures
DATE:	FILE#: NP02–2021 / SHEET: 2 of 4

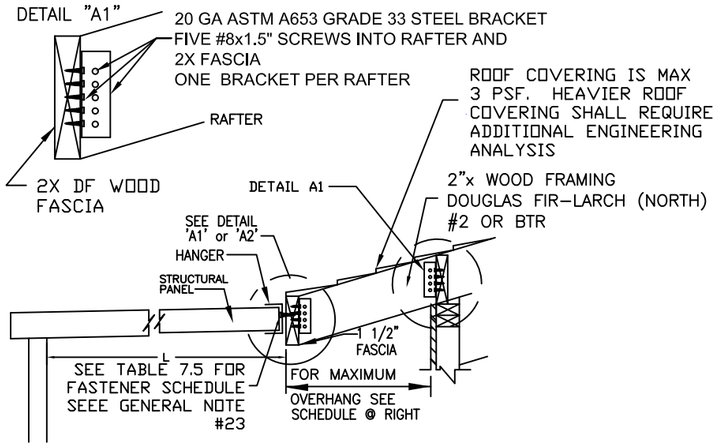

N21 ALTERNATE EAVE ATTACHMENT

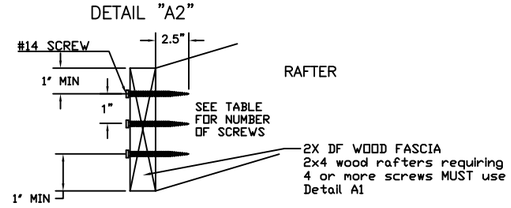

Live/Snow Load Solid Cover Wind (psf)	RAFTER SIZE (24" O/C)	MAX DISTANCE TO FIRST ROW OF POSTS "L" EAVE OVERHANG 6"	12"	18"	24"	30"	# of #14 Screws
10 115 MPH EXP B	2x4	20'-6"	18'-7"	10'-6"	5'-11"	2'-8"	2
	2x6	20'-6"	20'-6"	20'-6"	20'-6"	14'-10"	
	2x8	20'-6"	20'-6"	20'-6"	20'-6"	20'-6"	
10 105 MPH EXP C	2x4	20'-6"	18'-7"	10'-6"	5'-11"	2'-8"	2
	2x6	20'-6"	20'-6"	20'-6"	20'-6"	14'-10"	
	2x8	20'-6"	20'-6"	20'-6"	20'-6"	20'-6"	
10 110 MPH EXP C	2x4	20'-6"	18'-7"	10'-6"	5'-11"	2'-8"	2
	2x6	20'-6"	20'-6"	20'-6"	20'-6"	14'-10"	
	2x8	20'-6"	20'-6"	20'-6"	20'-6"	20'-6"	
10 115 MPH EXP C	2x4	20'-6"	18'-0"	10'-2"	5'-8"	2'-7"	2
	2x6	20'-6"	20'-6"	20'-6"	20'-6"	14'-4"	
	2x8	20'-6"	20'-6"	20'-6"	20'-6"	20'-6"	
10 120 MPH EXP C	2x4	20'-6"	16'-6"	9'-3"	5'-2"	2'-4"	2
	2x6	20'-6"	20'-6"	20'-6"	18'-9"	13'-2"	
	2x8	20'-6"	20'-6"	20'-6"	20'-6"	20'-6"	
10 130 MPH EXP C	2x4	20'-6"	13'-11"	7'-10"	4'-5"	2'-0"	3
	2x6	20'-6"	20'-6"	20'-6"	15'-11"	11'-2"	
	2x8	20'-6"	20'-6"	20'-6"	20'-6"	20'-6"	
10 140 MPH EXP C	2x4	20'-6"	12'-0"	6'-9"	3'-9"	1'-8"	3
	2x6	20'-6"	20'-6"	19'-11"	13'-8"	9'-7"	
	2x8	20'-6"	20'-6"	20'-6"	20'-6"	19'-4"	
20 140 MPH EXP C	2x4	18'-0"	9'-9"	5'-6"	3'-1"	1'-4"	3
	2x6	18'-0"	18'-0"	16'-2"	11'-1"	7'-9"	
	2x8	18'-0"	18'-0"	18'-0"	18'-0"	15'-8"	
25 140 MPH EXP C	2x4	18'-0"	10'-8"	6'-0"	3'-4"	1'-6"	3
	2x6	18'-0"	18'-0"	17'-9"	12'-2"	8'-6"	
	2x8	18'-0"	18'-0"	18'-0"	18'-0"	17'-3"	
30 140 MPH EXP C	2x4	17'-0"	8'-10"	4'-11"	2'-8"	1'-1"	3
	2x6	17'-0"	17'-0"	14'-9"	10'-0"	6'-11"	
	2x8	17'-0"	17'-0"	17'-0"	17'-0"	14'-3"	
35.7 140 MPH EXP C	2x4	16'-0"	7'-4"	3'-11"	1'-11"	0'-6"	3
	2x6	16'-0"	16'-0"	12'-3"	8'-2"	5'-6"	
	2x8	16'-0"	16'-0"	16'-0"	15'-11"	11'-8"	
42 140 MPH EXP C	2x4	13'-11"	6'-1"	3'-2"	1'-4"	0'-1"	4
	2x6	14'-6"	14'-6"	10'-3"	6'-8"	4'-4"	
	2x8	14'-6"	14'-6"	14'-6"	13'-4"	9'-7"	
50 140 MPH EXP C	2x4	11'-8"	5'-0"	2'-5"	0'-10"	0'-0"	4
	2x6	13'-3"	13'-3"	8'-5"	5'-4"	3'-3"	
	2x8	13'-3"	13'-3"	13'-3"	10'-11"	7'-8"	
60 140 MPH EXP C	2x4	9'-8"	4'-0"	1'-9"	0'-4"	0'-0"	4
	2x6	12'-2"	11'-7"	6'-9"	4'-1"	2'-4"	
	2x8	12'-2"	12'-2"	12'-2"	8'-9"	6'-0"	

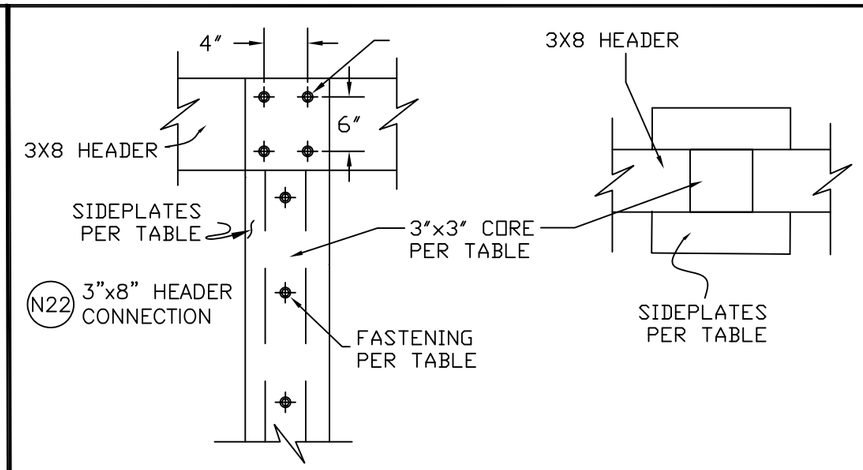

N22 3"x8" HEADER CONNECTION

FOOTING d (in)	Number of #14 SMS	Side Plates	3"x3" Core	Maximim Wind Condition for "On Slab" Attachment
26	10	0.024"x2"x6.625"	0.024"	105 mph Exp B
30	8	0.032"x2"x6.625"	0.032"	130 mph Exp B/110 MPH Exp C
31	16	0.024"x2"x6.625"	0.024"	115 mph Exp C
34	12	0.032"x2"x6.625"	0.032"	130 mph Exp C

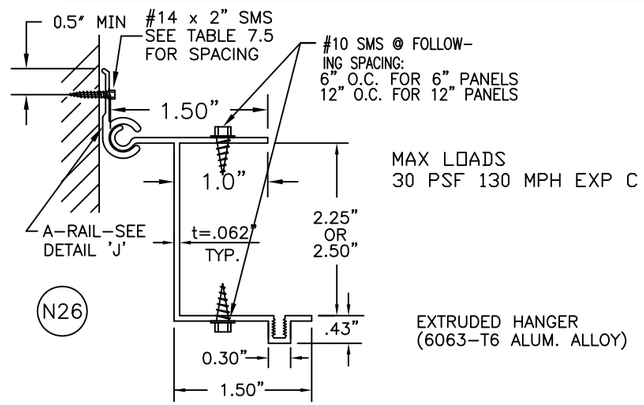

N26

MAX LOADS
30 PSF 130 MPH EXP C

EXTRUDED HANGER (6063-T6 ALUM. ALLOY)

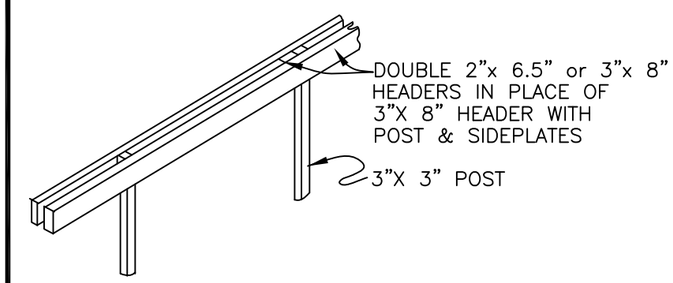

N25 DOUBLE 0.040"X2"X6.625" HEADERS (DETAIL N31)
DOUBLE 3"X8" HEADER (DETAIL N30)

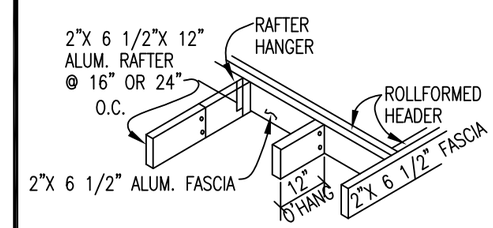

N28 ALTERNATE-DECORATIVE FASCIA TRIM

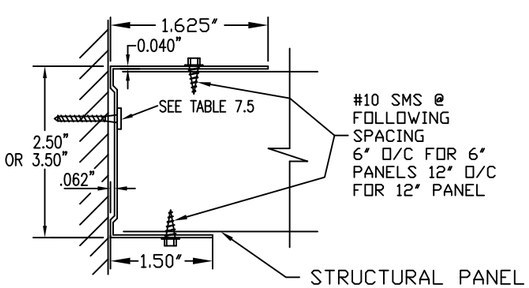

N27 ROLLFORMED HANGER (3004-H34 ALUM. ALLOY)

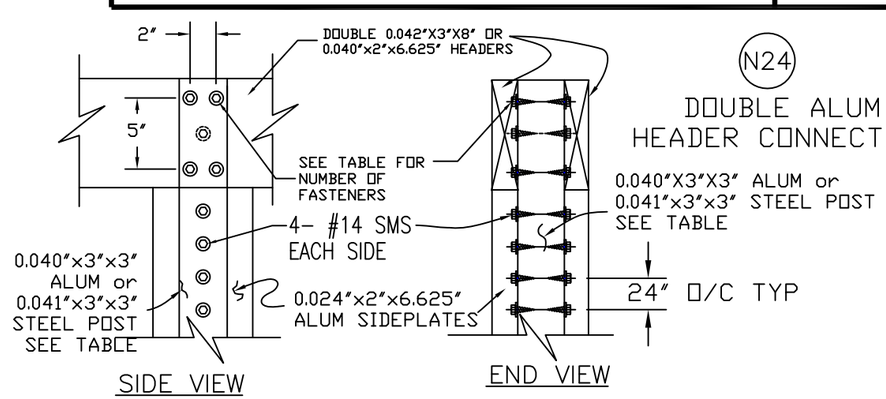

N24 DOUBLE ALUM HEADER CONNECTION

Max Uplift Footing d (in)	Total Number of #14 SMS	Maximim Wind Condition for "On Slab" Attachment	Minimum 3"x3" Post
29	8	130 mph Exp B/110 mph Exp C	0.040" Alum
31	10	120 mph Exp C	0.040" Alum
33	12	130 mph Exp C	0.040" Alum
32	8	120 mph Exp C	0.041" Steel
35	10	150 mph Exp C	0.041" Steel

Registered Professional Engineer (Civil) CERTIFICATE NO. 39702 CARL PUTNAM Date Signed ARIZONA, U.S.A. Expires 09/30/2024

JAN 20 2023

Amerimax EXTERIOR HOME PRODUCTS
28921 US Hwy 74
Romoland, CA 92585

DRAWN BY: BEJ/CP	TYPE:	
SCALE: NTS	NAME: Component Parts & Connection Details for Newport Patio Structures	
DATE:	FILE#: NP03-2021	SHEET: 3 of 4

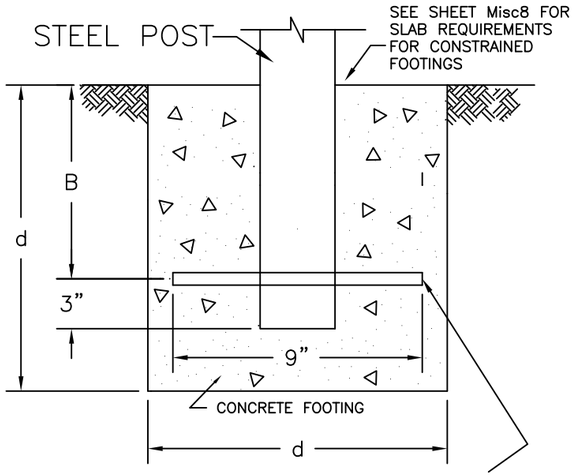

3/8" x 9" STEEL REBAR EMBEDDED AT "B"
d < 33" B = 9"
d < 38" B = 12"
d < 46" B = 18"

N29 FREESTANDING OR ATTACHED POST/FOOTING CONNECTION

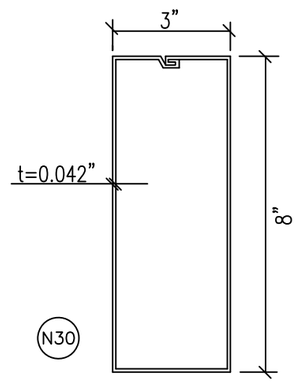

N30

HEADER
(3004-H34 ALUM. ALLOY)

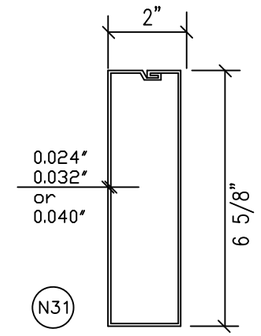

N31

RAFTER & SIDEPLATES
(3004-H34 ALUM. ALLOY)

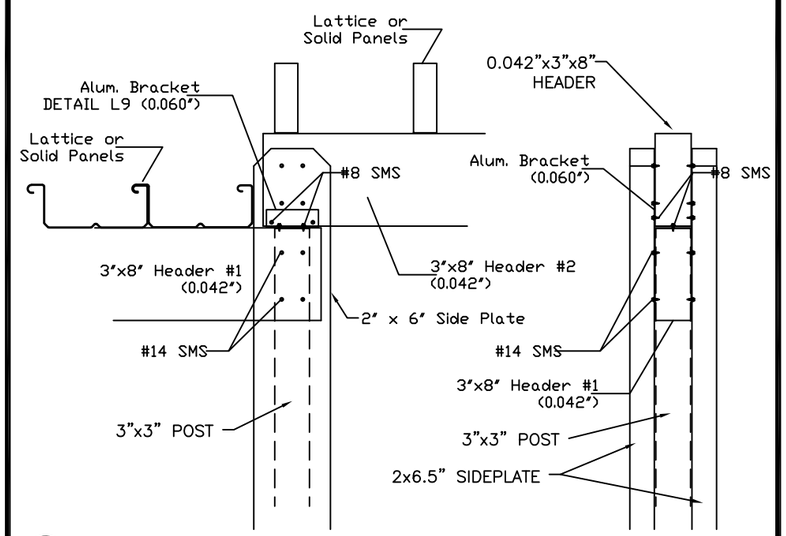

N32 ALTERNATIVE SPLICE FOR ATTACHED UNITS

USE SAME TABLE IN N22 FOR FOOTING SIZES AND "ON SLAB" WIND CONDITIONS

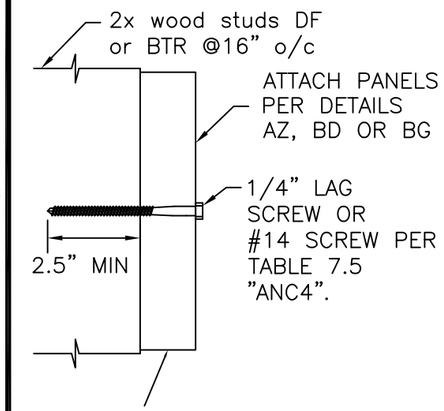

CONTINUOUS 2x DF WOOD LEDGER OR PROVIDE SIMPSON STRONG TIE MSTA36 (ICC ESR 2105 AT SPLICE LOCATION)
COVER W/ 0.019" ALUMINUM

N34 LEDGER BOARD ATTACHMENT

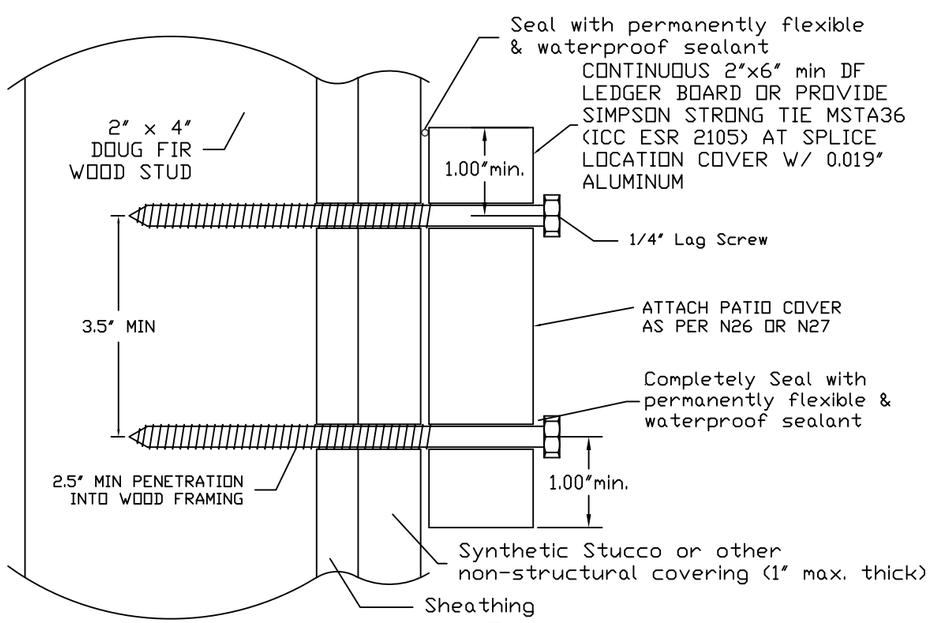

SEE ALLOWABLE DISTANCE TO FIRST ROW OF POSTS IN TABLE 7.7

N33 STUCCO ATTACHMENT DETAIL W/ LEDGER BOARD

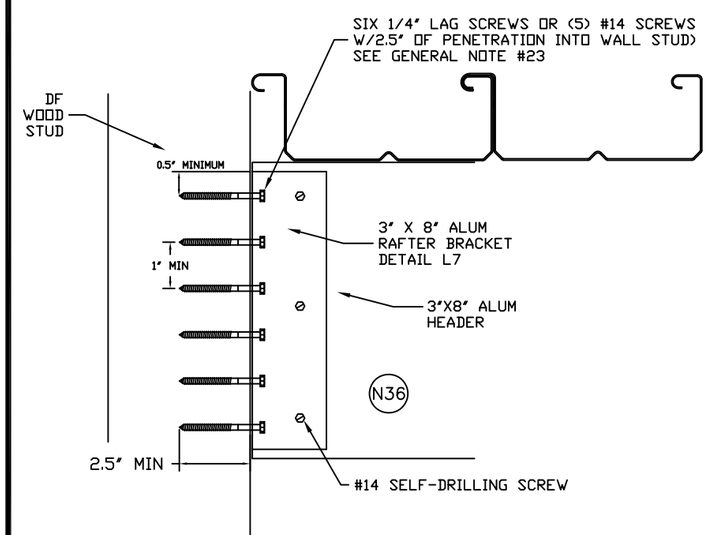

POST ALTERNATIVE FOR SLAB ATTACHMENT
MAX WIND LOAD IS
130 MPH EXP B or
110 MPH EXP C

Registered Professional Engineer (Civil) CERTIFICATE NO. 39702 CARL PUTNAM Date Signed ARIZONA U.S.A. Expires 09/30/2024

JAN 20 2023

Amerimax EXTERIOR HOME PRODUCTS
28921 US Hwy 74
Romoland, CA 92585

DRAWN BY: BEJ/CP	TYPE:	
SCALE: NTS	NAME: Component Parts & Connection Details for Newport Patio Structures	
DATE:	FILE#: NP04-2021	SHEET: 4 of 4

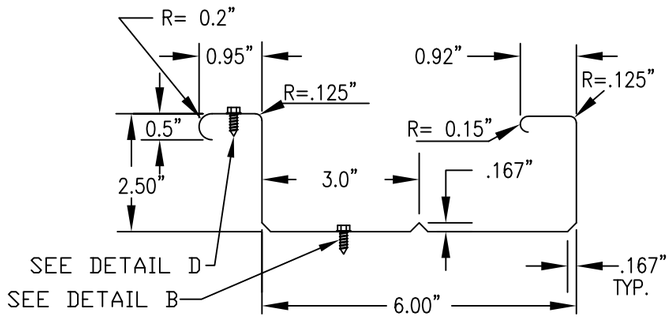

(A) 2.5"x6" SUPER SIX PANEL
t = 0.018" 3004H36
t >0.018" 3004H34

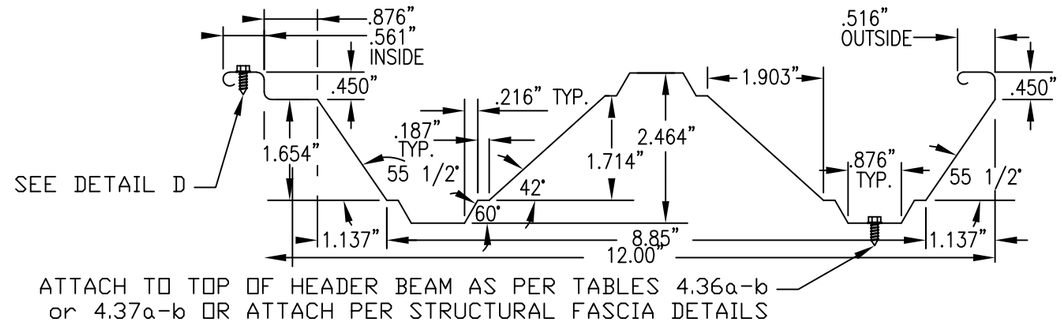

(B) 2.5"X12" MARK X ALUMINUM PANEL
0.018"-0.032" 3004 H36
0.036" 3004 H34

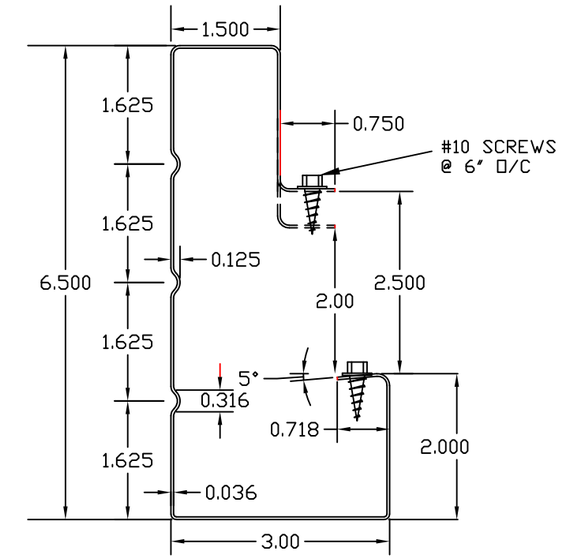

(E) 6 1/2" ROLLFORMED FASCIA 3105H25 ALLOY

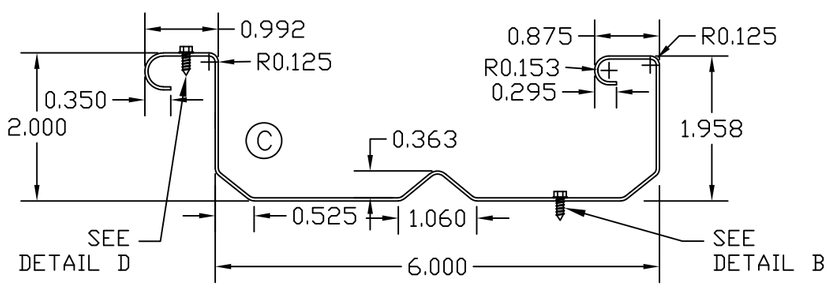

(C) 2"x6" FLAT PANEL
t = 0.018" 3004H36 ALUMINUM
t > 0.018" 3004H34 ALUMINUM

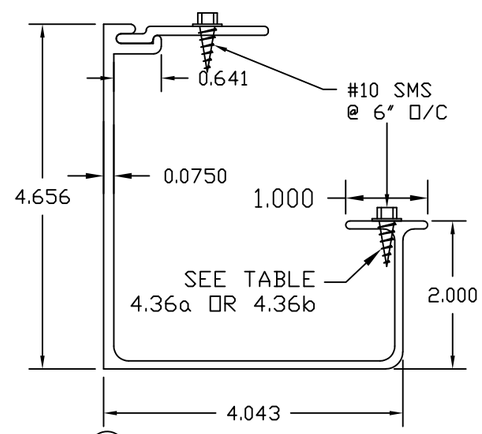

(G) CALIFORNIA FASCIA
(6063-T6 ALUM. ALLOY)

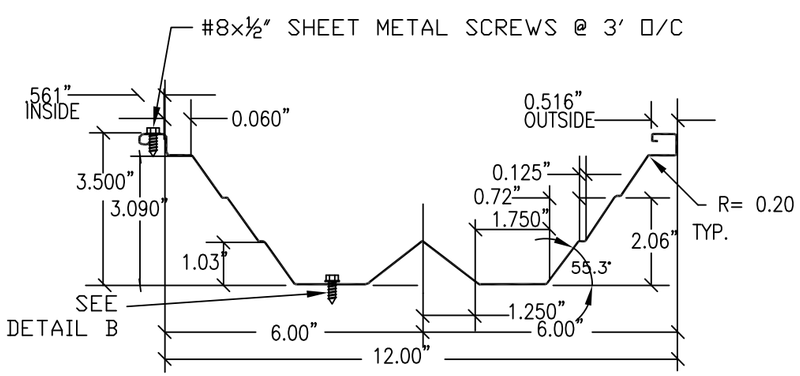

(D) 3.5"x12" "SUPER 12" W PANEL
t = 0.018" 3004H36 ALUMINUM
t > 0.018" 3004H34 ALUMINUM

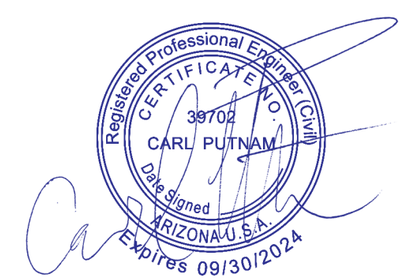

JAN 20 2023

Amerimax EXTERIOR HOME PRODUCTS
28921 US Hwy 74
Romoland, CA 92585

DRAWN BY: BEJ/CP	TYPE:	
SCALE: NTS	NAME: Component Parts & Connection Details	
DATE:	FILE#: CD01-2021	SHEET: 1 of 9

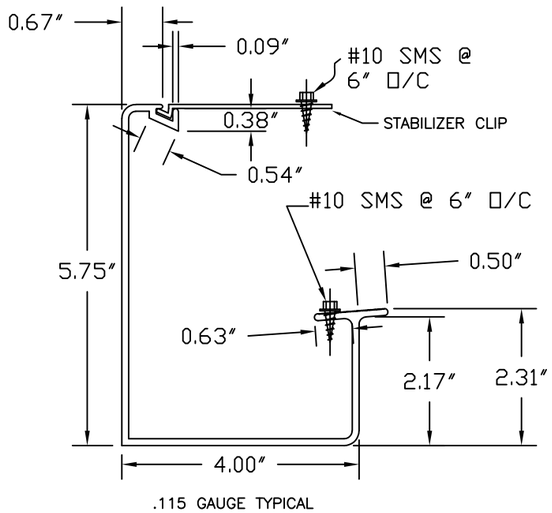

(H) CLASSIC FASCIA
W/ STABLIZER CLIP
(6061–T6 Alum. Alloy)

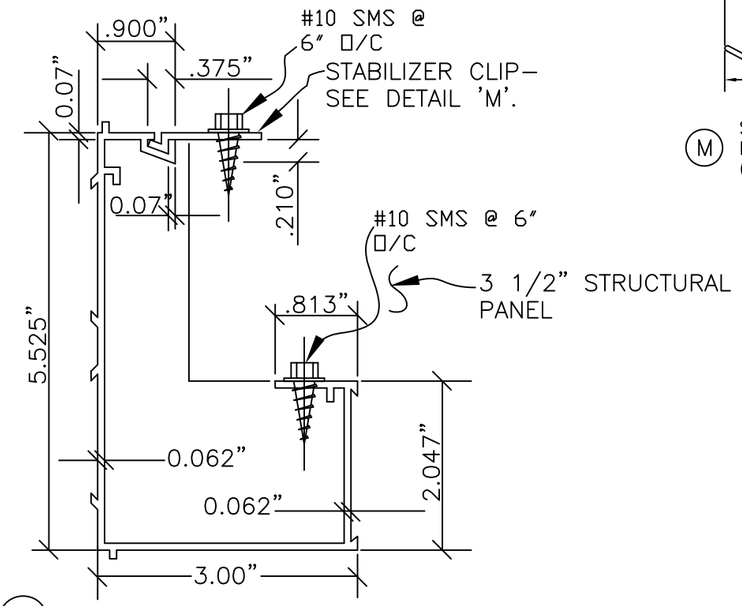

(L) 5 1/2″ EXTRUDED HEADER
(6061–T6 ALUM. ALLOY)

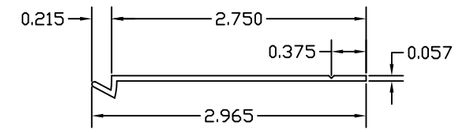

(M) STABILIZER CLIP FOR EXTRUDED
HEADERS 'H' & 'L'
(6063–T6 ALUM. ALLOY)

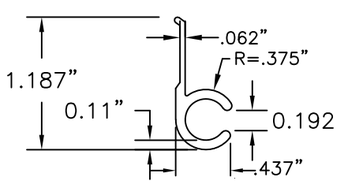

NOTE:
SEE DETAIL 'BB'
FOR EXTRUDED
HANGER W/ A–RAIL

(J) A–RAIL
(6063–T6 ALUM. ALLOY)

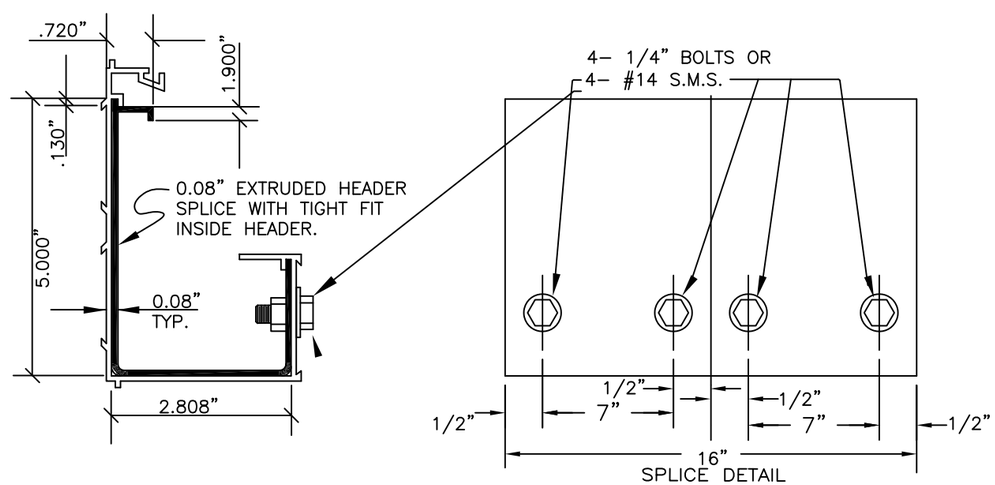

(N) 5 1/2″ EXTRUDED HEADER SPLICE
6063T5 ALUMIMUM ALLOY
SHEAR SPLICE ONLY
MUST BE WITHIN 12″ OF A POST

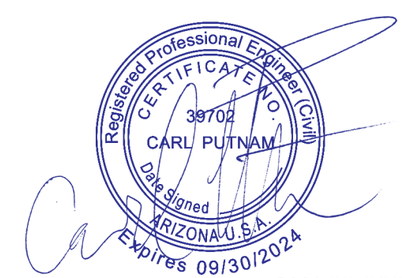

JAN 20 2023

Amerimax
EXTERIOR HOME PRODUCTS

28921 US Hwy 74
Romoland, CA 92585

DRAWN BY: BEJ/CP	TYPE:
SCALE: NTS	NAME: Component Parts & Connection Details
DATE:	FILE#: CD02–2021 / SHEET: 2 of 9

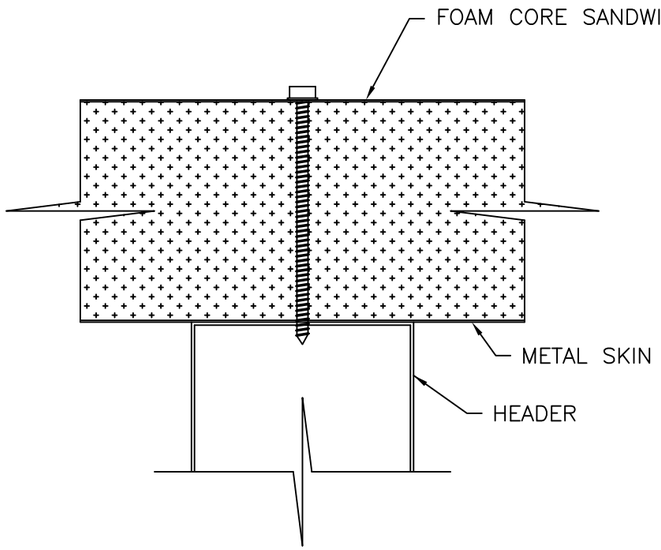

USE OF FOAM CORE SANDWICH PANELS WILL REQUIRE A REGISTERED DESIGN PROFESSIONAL TO COMPLY WITH CURRENT ICC ESR

(O) SANDWICH PANEL TO HEADER CONNECTION

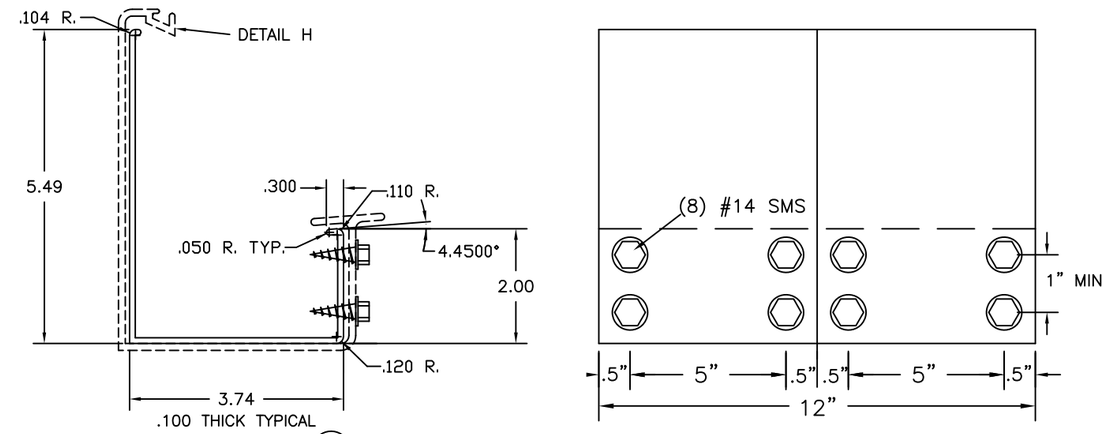

(P) CLASSIC HEADER SHEAR SPLICE (6063T5 ALUM) MUST BE WITHIN 12" OF A POST

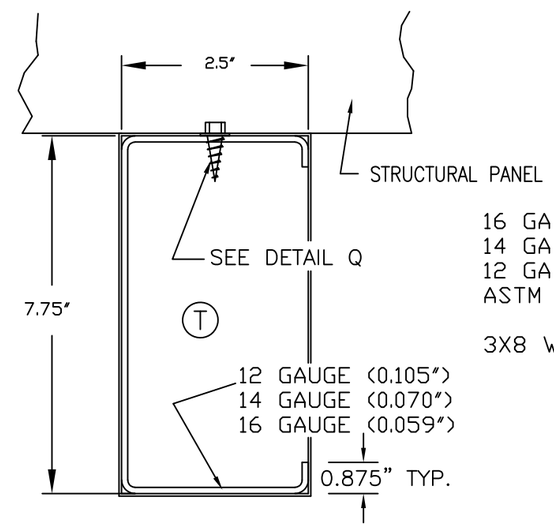

16 GA (t=0.059") 3"X8" STEEL HEADER
14 GA (t=0.070") 3"X8" STEEL HEADER
12 GA (t=0.105") 3"X8" STEEL HEADER
ASTM A653 GRADE 50

3X8 WRAP REQUIRED AS PER DETAIL AW

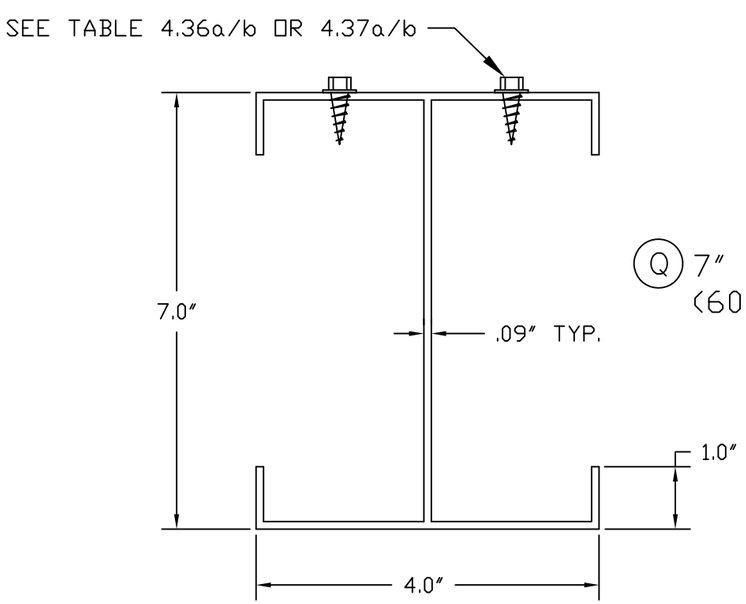

(Q) 7" x 4" I BEAM HEADER (6061-T6 ALUM. ALLOY)

Registered Professional Engineer (Civil)
CERTIFICATE NO. 39702
CARL PUTNAM
Date Signed
ARIZONA U.S.A.
Expires 09/30/2024

JAN 20 2023

Amerimax EXTERIOR HOME PRODUCTS
28921 US Hwy 74
Romoland, CA 92585

DRAWN BY: BEJ/CP	TYPE:	
SCALE: NTS	NAME: Component Parts & Connection Details	
DATE:	FILE#: CD03-2021	SHEET: 3 of 9

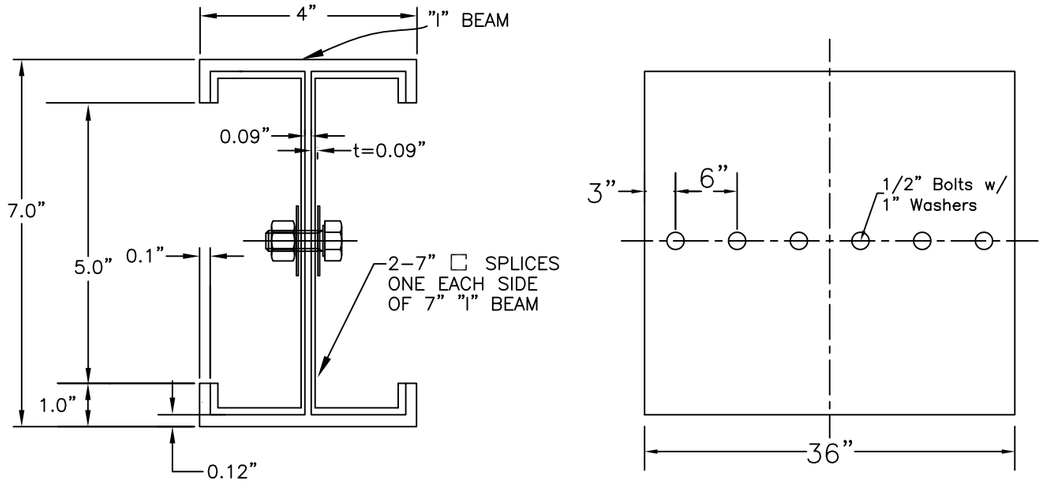

7" X 4" I-BEAM SPLICE
(6061-T6 ALUM. ALLOY)

(U) 7" X 4" ALUM. I-BEAM FULL STRENGTH SPLICE BOLT LAYOUT

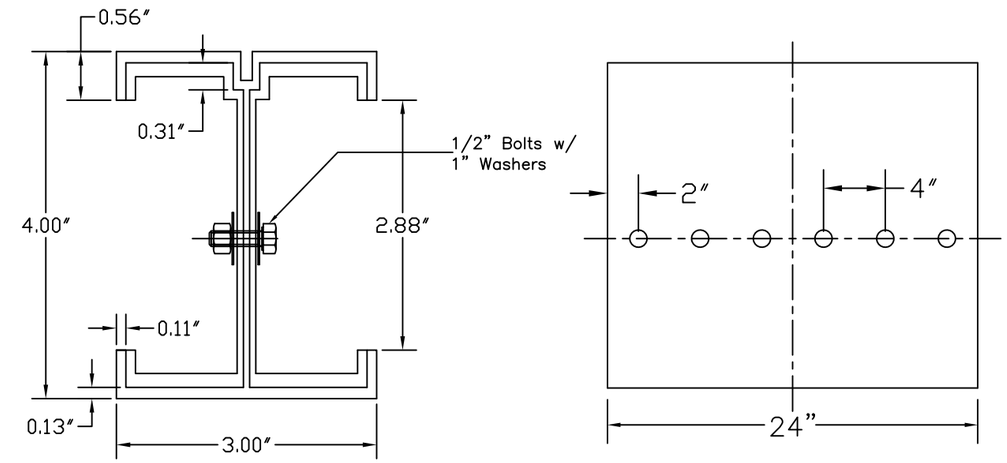

(X) 4"X3" I BEAM FULL STRENGTH
SPLICE BOLT LAYOUT
6063-T6 ALUMINUM ALLOY

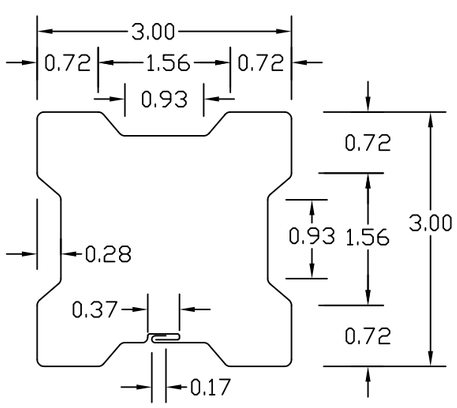

t = 0.041"

(W) 3"x3" CLOVERLEAF HEADER
(A-653 Fy=40 KSI STEEL)

(Y) 4"x3" I BEAM
6063-T6 ALUM

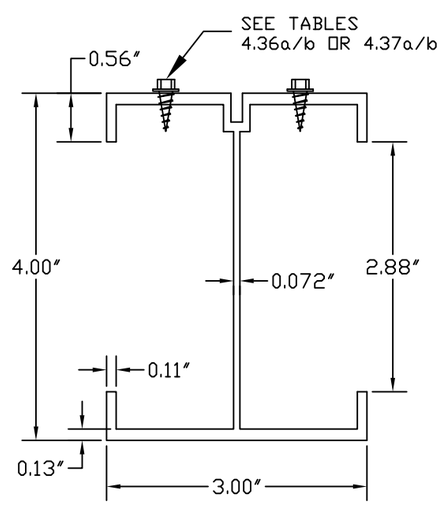

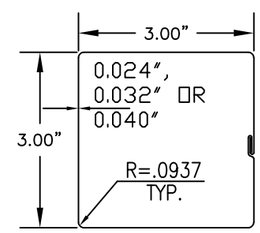

(Z) 3" SQUARE POST
(3004-H34 ALUM. ALLOY)

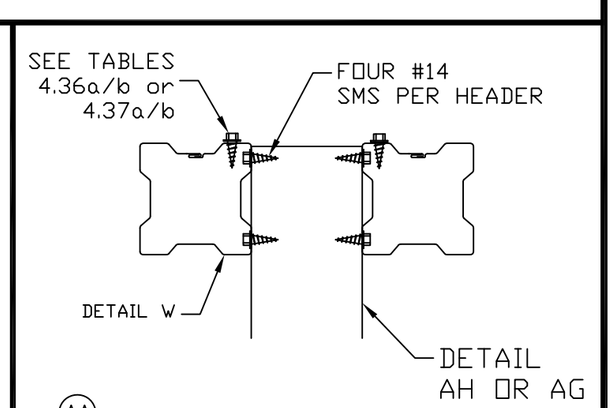

(AA) SINGLE OR DOUBLE STEEL
CLOVERLEAF HEADER ASTM A653
GRADE 40

Registered Professional Engineer (Civil)
CERTIFICATE NO.
39702
CARL PUTNAM
Date Signed
ARIZONA U.S.A.
Expires 09/30/2024

JAN 20 2023

Amerimax EXTERIOR HOME PRODUCTS
28921 US Hwy 74
Romoland, CA 92585

DRAWN BY: BEJ/CP	TYPE:	
SCALE: NTS	NAME: Component Parts & Connection Details	
DATE:	FILE#: CD04-2021	SHEET: 4 of 9

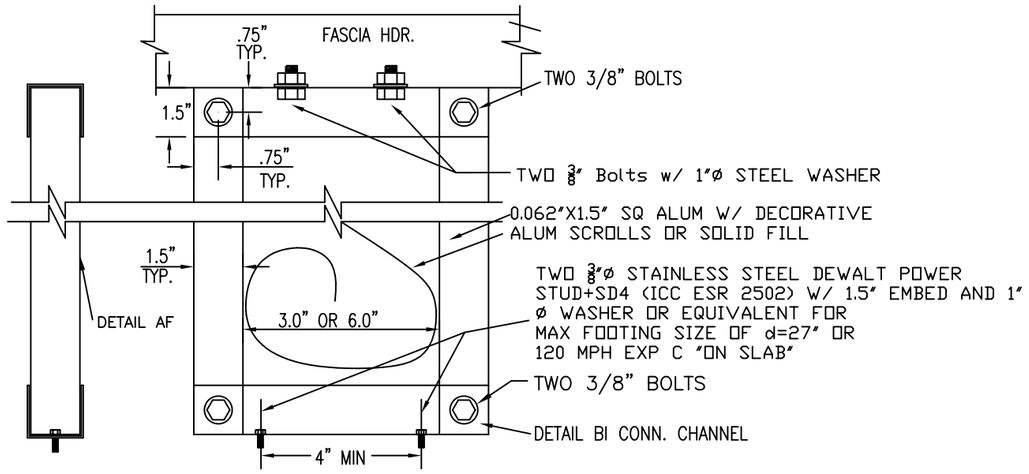

(AC) SCROLL POST CONNECTION TO CONCRETE SLAB (MAX IS 110 MPH EXP B OR 95 MPH EXP C) OR FOOTING (MAX = d=23")
BRACKET = 6063 T6 ALUM ALLOY
POST = DETAIL AF
ONLY USABLE FOR SINGLE SPAN ATTACHED UNITS

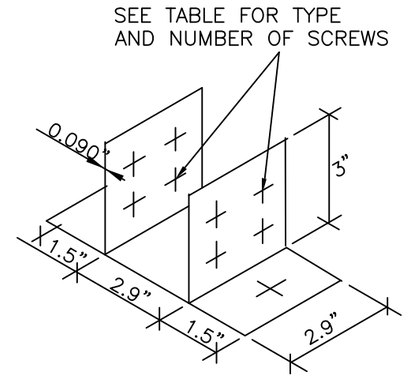

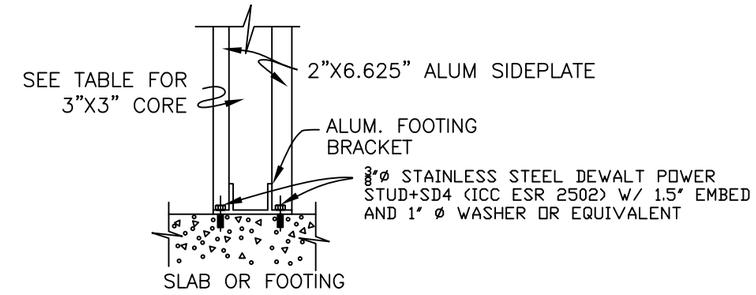

(AD) ALUMINUM FOOTING BRACKET FOR CONNECTING TO CONCRETE SLAB OR FOOTING
6063 T6 ALUM ALLOY
ONLY USABLE FOR SINGLE SPAN ATTACHED UNITS

Footing d (in)	Number Of #14 SMS	3"x3" Post	Concrete Anchors	Maximum Wind Condition for "On Slab" Attachment
24	8	0.024" Alum	3/8"	100 mph Exp B/ 95 mph Exp C
26	10	0.024" Alum	3/8"	115 mph Exp B / 105 mph Exp C
27	8	0.032" Alum	3/8"	125 mph Exp B / 110 mph Exp C
28	4	0.041" Steel	3/8"	125 mph Exp B / 110 mph Exp C

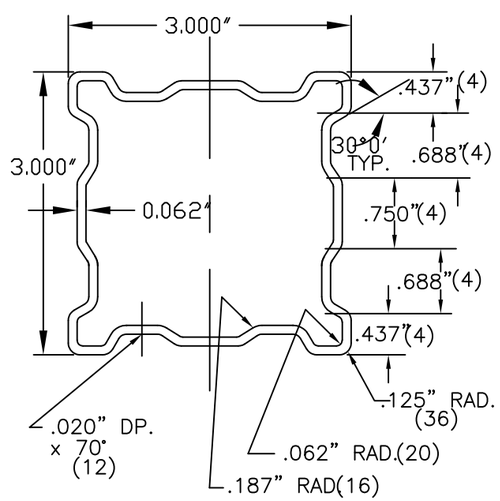

(AE) COLONIAL POSTS
(3" ALUM. 6063-T6)
"t" = 0.062" UNLESS OTHERWISE NOTED

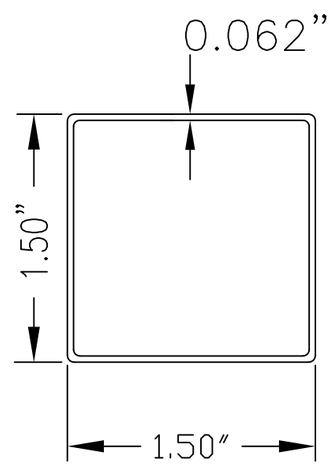

(AF) TWIN 1.5" SQ. X .062" EXTRUDED POST (ALUM. 6063-T6)

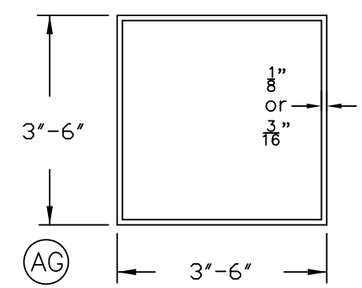

(AG) 3", 4", 5" or 6" ASTM A500 GRADE B STEEL POST
SEE GENERAL NOTE #9 FOR CORROSION PROTECTION

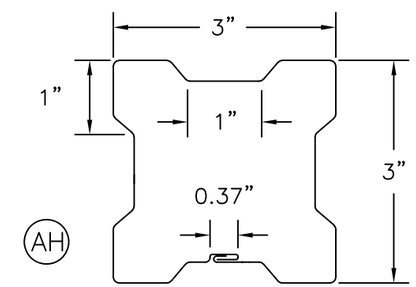

(AH) t (IN)= 0.030, 0.040 (ALUM)
= 0.041 (STEEL)

3" CLOVERLEAF POST
(3105 H25 ALUM OR ASTM A653 GRADE 40 STEEL)

Registered Professional Engineer (Civil)
CERTIFICATE NO. 39702
CARL PUTNAM
Date Signed
ARIZONA U.S.A.
Expires 09/30/2024

JAN 20 2023

Amerimax EXTERIOR HOME PRODUCTS
28921 US Hwy 74
Romoland, CA 92585

DRAWN BY: BEJ/CP	TYPE:
SCALE: NTS	NAME: Component Parts & Connection Details
DATE:	FILE#: CD05-2021 — SHEET: 5 of 9

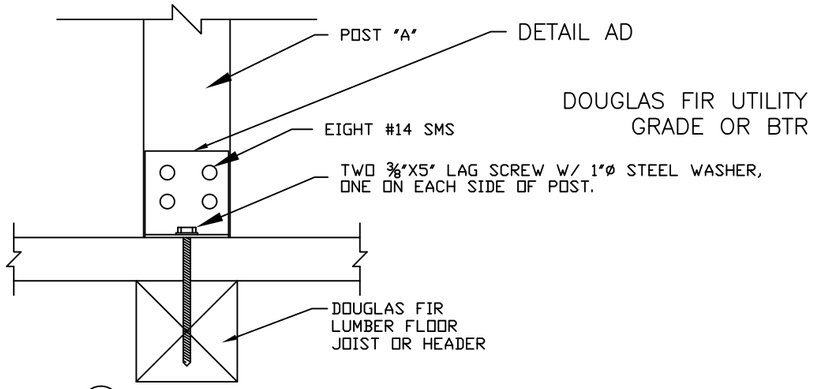

(AL) ATTACHED STRUCTURE POST TO FLOOR JOIST

POST SPACING IS RESTRICTED TO THE "ON SLAB" SPACING SHOWN IN TABLES IN SECTION 5.0.

SOLID COVERS MUST USE THESE RESTRICTIONS
FOR 10 PSF SNOW/LIVE LOAD
MAXIMUM WINDSPEED IS
130 MPH EXP B
110 MPH EXP C

FOR 20 PSF OR GREATER SNOW/LIVE LOAD
MAXIMUM WINDSPEED IS
150 MPH EXP C

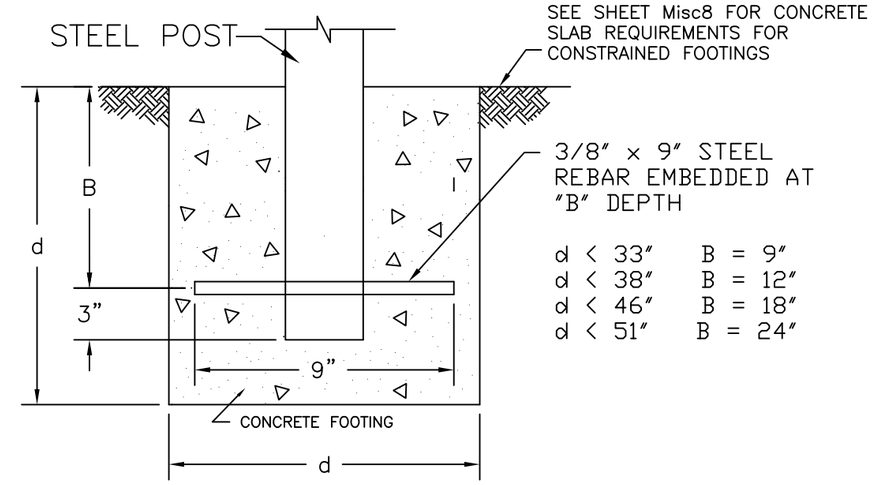

(AQ) FREESTANDING OR ATTACHED STRUCTURE COLUMN TO FOOTING CONNECTION DETAIL

	Required # of #14 Self Drilling Screws (# of 1/4" Bolts)									
Beam	4 (4)	5 (4)	6 (5)	7 (6)	8 (7)	10 (4)	12 (5)	14 (6)	16 (7)	18 (8)
Type					**BREAKPOINT Span**					
All C Beams "On Slab"	All Spans									
16G Steel 3x8	All Spans									
14G Steel 3x8	All Spans									
12G Steel 3x8	28'-8"	20'-1"	15'-5"	10'-7"	All Spans					
Double 16G Steel 3x8						All Spans				
Double 14G Steel 3x8						15'-8"	All Spans			
Double 12G Steel 3x8						28'-6"	22'-11"	19'-0"	16'-5"	All Spans

Spans in Tables of Section 5.0 GREATER than the BREAKPOINT span require the number of screw/bolts shown.
Spans in Tables of Section 5.0 LESS than the BREAKPOINT span require a LARGER anount of screws/bolts because the load will be heavier (higher live/snow/wind or trib width)

EXAMPLE Table 5.1a (10 psf Live, 95 mph Exp B) for a 3' trib and a 12G Steel C allows a maximum post spacing of 36'-5". From the table above this is above 28'-8" and will require four #14 Self Drilling Screws or four ¼" steel bolts. If the user desires a smaller span because of practical matters (site conditions, aesthetics etc) only four screws or bolts would be required. Using the same load conditions but the trib is 18', the allowable span is now 11'-10" and would require seven #14 screws or 6 bolts as the allowable span is under 15'-5" and over 10'-7".

1/4" BOLTS ASTM A307 OR
#14 SELF DRILLING SCREWS (SDS)
SEE TABLE FOR QTY

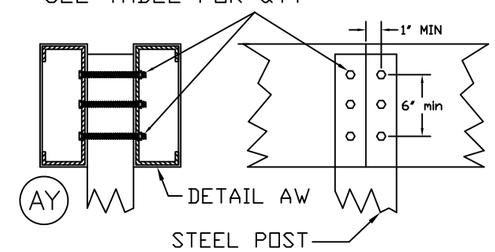

DOUBLE OR SINGLE 3"X8" STEEL C BEAM. BOLT LAYOUT FOR SPLICED AND NON-SPLICE ATTACHMENT

Registered Professional Engineer (Civil)
CERTIFICATE NO. 39702
CARL PUTNAM
Date Signed
ARIZONA, U.S.A.
Expires 09/30/2024

JAN 20 2023

Amerimax EXTERIOR HOME PRODUCTS
28921 US Hwy 74
Romoland, CA 92585

DRAWN BY: BEJ/CP	TYPE:	
SCALE: NTS	NAME: Component Parts & Connection Details	
DATE:	FILE#: CD06-2021	SHEET: 6 of 9

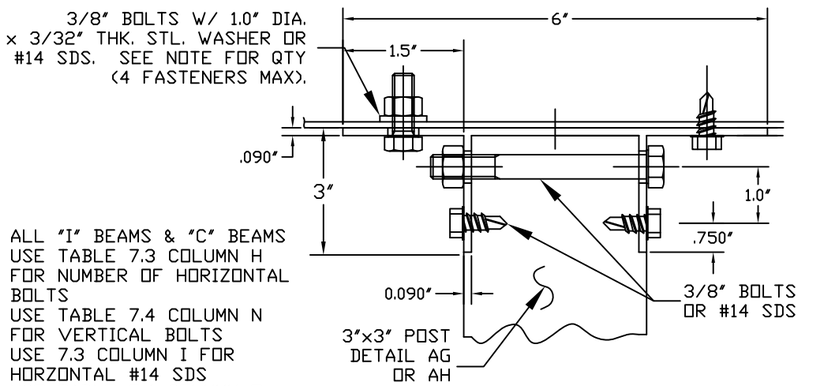

ALL "I" BEAMS & "C" BEAMS
USE TABLE 7.3 COLUMN H
FOR NUMBER OF HORIZONTAL BOLTS
USE TABLE 7.4 COLUMN N
FOR VERTICAL BOLTS
USE 7.3 COLUMN I FOR
HORZONTAL #14 SDS
USE TABLE 7.4 COLUMN O
FOR VERTICAL #14 SDS
(SDS= SELF DRILLING SCREW)

(AR) ALTERNATE 3" SQ. POST CONNECTOR BRACKET (6063–T6 ALUM. ALLOY)

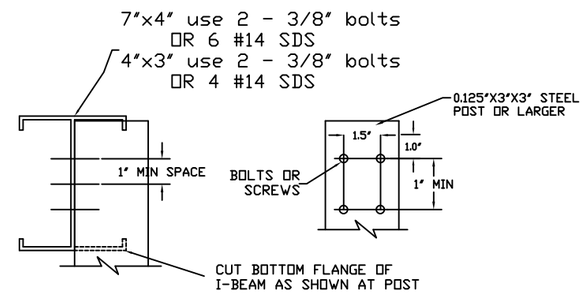

(AS) ALTERNATE – I BEAM TO POST CONNECTION

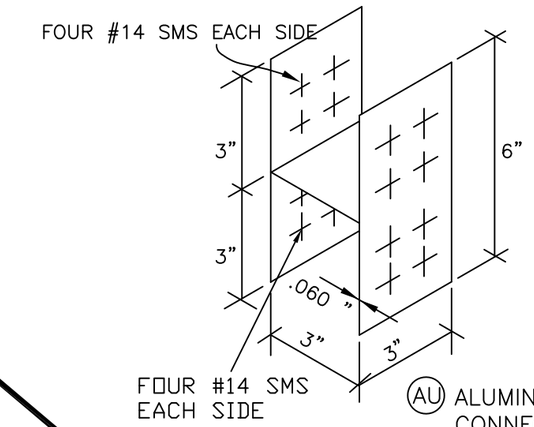

(AU) ALUMINUM 'H' BRACKET FOR CONNECTING COLUMN TO HEADER (6063–T5 ALUM. ALLOY)

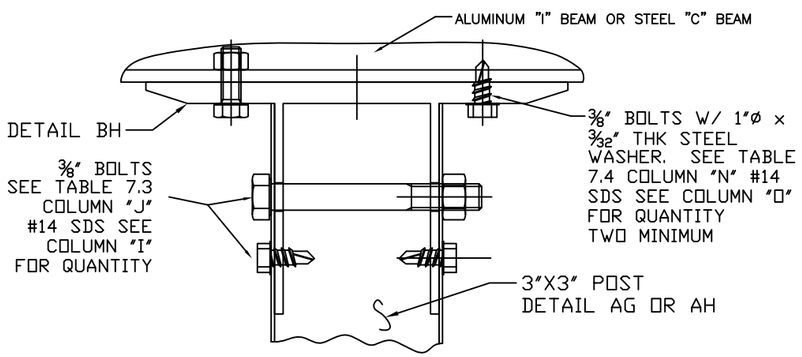

(AT) 3" STEEL POST TO HEADER CONN. BRACKET

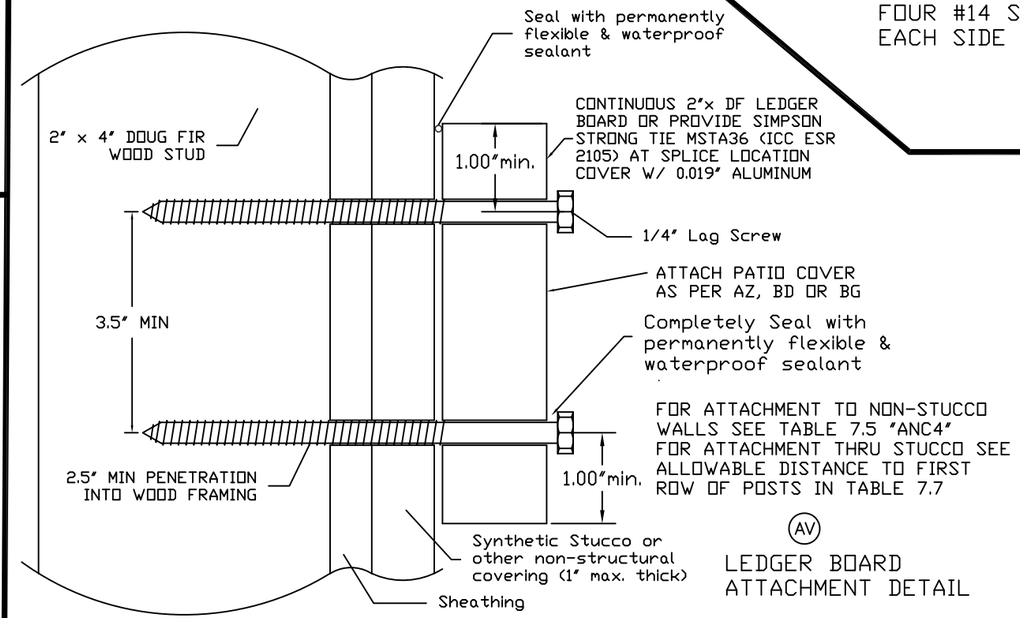

(AV) LEDGER BOARD ATTACHMENT DETAIL

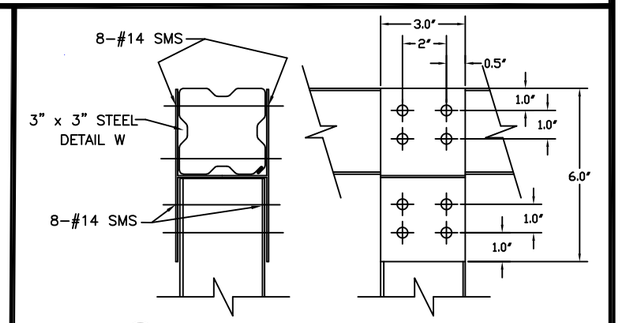

(AX) POST TO HEADER CONNECTION FOR 3"X3" STEEL HEADER "W"

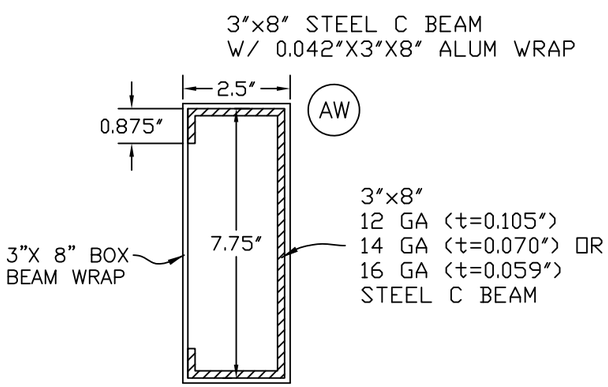

(AW)

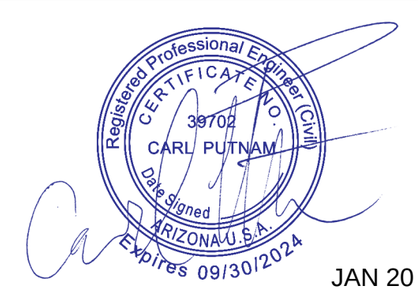

JAN 20 2023

Amerimax EXTERIOR HOME PRODUCTS
28921 US Hwy 74
Romoland, CA 92585

DRAWN BY: BEJ/CP	TYPE:	
SCALE: NTS	NAME: Component Parts & Connection Details	
DATE:	FILE#: CD07–2021	SHEET: 7 of 9

ICC ESR 1398 (2021 IBC) 12/16/2022

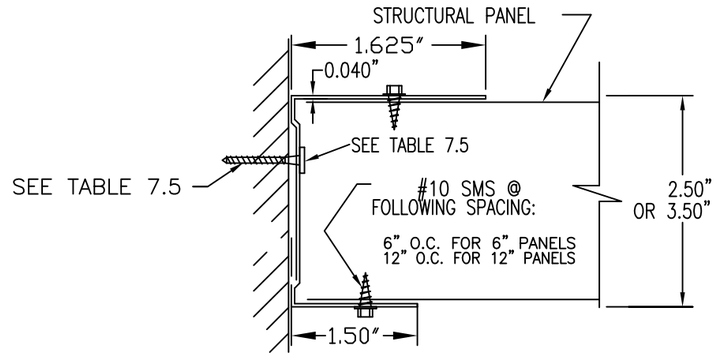

(AZ) ROLLFORMED HANGER
(3004–H34 ALUM. ALLOY)

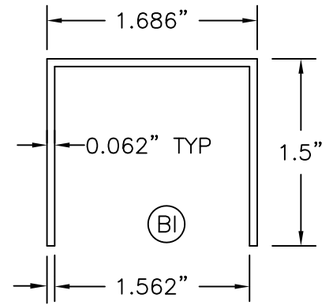

EXTRUDED CHANNEL CONNECTOR
(6063–T6 ALUM ALLOY)

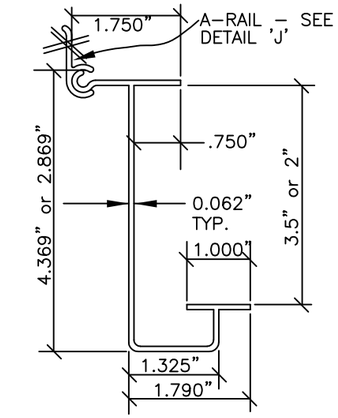

(BB) 3 1/2" "J" HANGER
(6063–T6 ALUM. ALLOY)

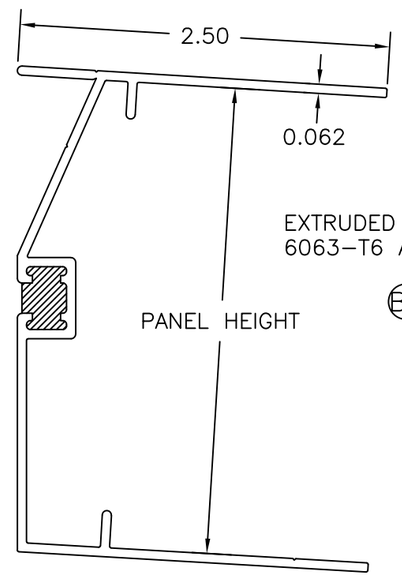

EXTRUDED WALL HANGER
6063–T6 ALUM ALLOY

(BE)

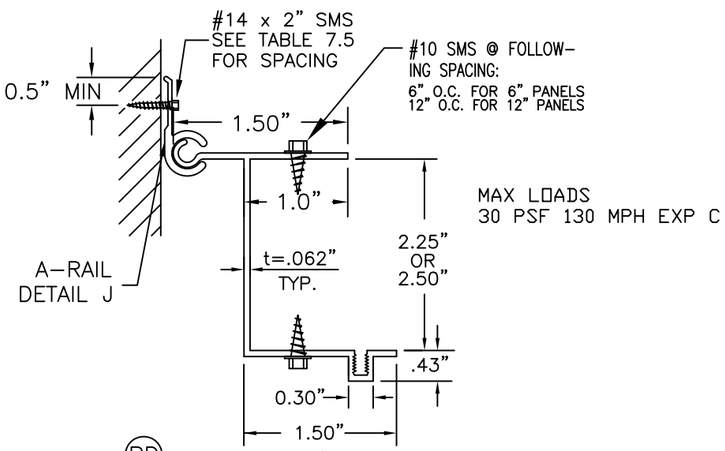

(BD) EXTRUDED HANGER
(6063–T6 ALUM. ALLOY)

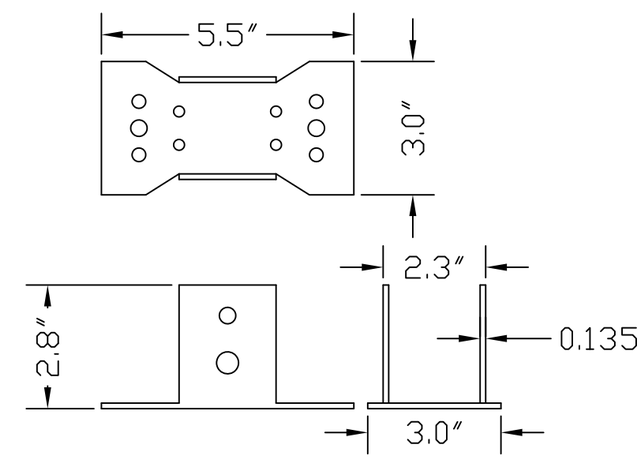

(BH) ASTM A36 STEEL BRACKET

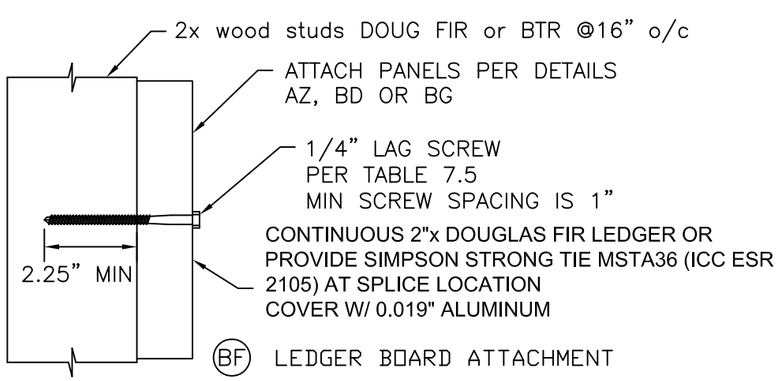

(BF) LEDGER BOARD ATTACHMENT

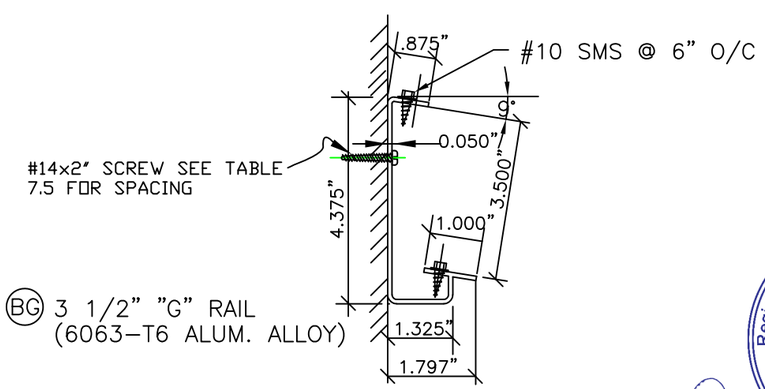

(BG) 3 1/2" "G" RAIL
(6063–T6 ALUM. ALLOY)

Registered Professional Engineer (Civil)
CERTIFICATE NO. 39702
CARL PUTNAM
Date Signed
ARIZONA U.S.A.
Expires 09/30/2024

JAN 20 2023

Amerimax EXTERIOR HOME PRODUCTS
28921 US Hwy 74
Romoland, CA 92585

DRAWN BY: BEJ/CP	TYPE:	
SCALE: NTS	NAME: Component Parts & Connection Details	
DATE:	FILE#: CD08–2021	SHEET: 8 of 9

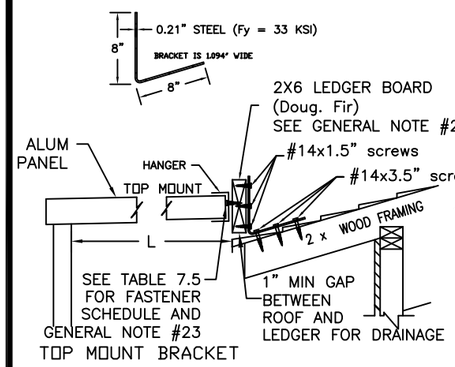

EAVE OVERHANG AND "L"
MUST COMPLY WITH
DETAIL BN ALSO

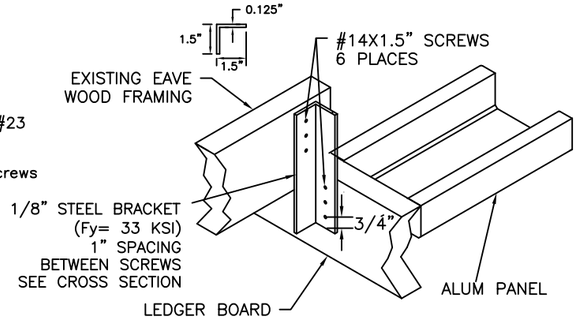

SIDE MOUNT BRACKET

(BI) ALTERNATE EAVE ATTACHMENTS

Live Load (psf)	Wind Speed and Exposure	MAX "L" FOR TOP OR SIDE MOUNT 16" o/c	24"o/c
10	115 mph Exp B	15'-2"	10'-1"
	130 mph Exp B	13'-7"	9'-1"
	100 mph Exp C	15'-2"	10'-1"
	110 mph Exp C	14'-7"	9'-8"
	115 mph Exp C	13'-10"	9'-3"
	130 mph Exp C	12'-2"	8'-2"
20	115 mph Exp B	10'-3"	6'-9"
	100 mph Exp C	10'-3"	6'-9"
	110 mph Exp C	10'-0"	6'-8"
	115 mph Exp C	9'-8"	6'-6"
	130 mph Exp C	8'-9"	5'-10"

ALL HOUSE PENETRATIONS MUST BE COMPLETELY AND PERMANENTLY SEALED
NOT ALLOWED IN SNOW LOAD AREAS
SEE GENERAL NOTE #9 FOR CORROSION PROTECTION

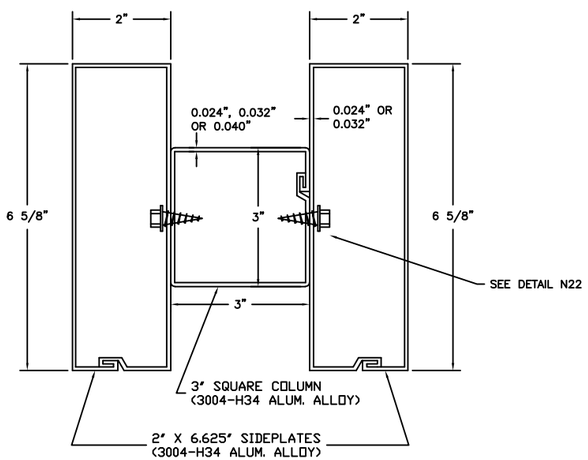

(BK)

(BN) ALTERNATE EAVE ATTACHMENT

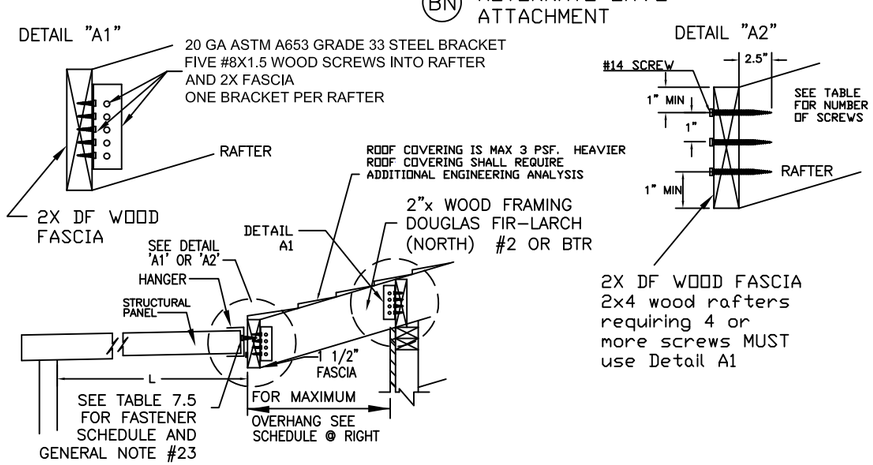

Live/Snow Load Solid Cover Wind (psf)	RAFTER SIZE (24" O/C)	MAX DISTANCE TO FIRST ROW OF POSTS "L" EAVE OVERHANG 6"	12"	18"	24"	30"	# of #14 Screws
10 115 MPH EXP B	2x4	20'-6"	18'-7"	10'-6"	5'-11"	2'-8"	
	2x6	20'-6"	20'-6"	20'-6"	20'-6"	14'-10"	2
	2x8	20'-6"	20'-6"	20'-6"	20'-6"	20'-6"	
10 105 MPH EXP C	2x4	20'-6"	18'-7"	10'-6"	5'-11"	2'-8"	
	2x6	20'-6"	20'-6"	20'-6"	20'-6"	14'-10"	2
	2x8	20'-6"	20'-6"	20'-6"	20'-6"	20'-6"	
10 110 MPH EXP C	2x4	20'-6"	18'-7"	10'-6"	5'-11"	2'-8"	
	2x6	20'-6"	20'-6"	20'-6"	20'-6"	14'-10"	2
	2x8	20'-6"	20'-6"	20'-6"	20'-6"	20'-6"	
10 115 MPH EXP C	2x4	20'-6"	18'-0"	10'-2"	5'-8"	2'-7"	
	2x6	20'-6"	20'-6"	20'-6"	20'-6"	14'-4"	2
	2x8	20'-6"	20'-6"	20'-6"	20'-6"	20'-6"	
10 120 MPH EXP C	2x4	20'-6"	16'-6"	9'-3"	5'-2"	2'-4"	
	2x6	20'-6"	20'-6"	20'-6"	18'-9"	13'-2"	2
	2x8	20'-6"	20'-6"	20'-6"	20'-6"	20'-6"	
10 130 MPH EXP C	2x4	20'-6"	13'-11"	7'-10"	4'-5"	2'-0"	
	2x6	20'-6"	20'-6"	20'-6"	15'-11"	11'-2"	3
	2x8	20'-6"	20'-6"	20'-6"	20'-6"	20'-6"	
10 140 MPH EXP C	2x4	20'-6"	12'-0"	6'-9"	3'-9"	1'-8"	
	2x6	20'-6"	20'-6"	19'-11"	13'-8"	9'-7"	3
	2x8	20'-6"	20'-6"	20'-6"	20'-6"	19'-4"	
20 140 MPH EXP C	2x4	18'-0"	9'-9"	5'-6"	3'-1"	1'-4"	
	2x6	18'-0"	18'-0"	16'-2"	11'-1"	7'-9"	3
	2x8	18'-0"	18'-0"	18'-0"	18'-0"	15'-8"	
25 140 MPH EXP C	2x4	18'-0"	10'-8"	6'-0"	3'-4"	1'-6"	
	2x6	18'-0"	18'-0"	17'-9"	12'-2"	8'-6"	3
	2x8	18'-0"	18'-0"	18'-0"	18'-0"	17'-3"	
30 140 MPH EXP C	2x4	17'-0"	8'-10"	4'-11"	2'-8"	1'-1"	
	2x6	17'-0"	17'-0"	14'-9"	10'-0"	6'-11"	3
	2x8	17'-0"	17'-0"	17'-0"	17'-0"	14'-3"	
35.7 140 MPH EXP C	2x4	16'-0"	7'-4"	3'-11"	1'-11"	0'-6"	
	2x6	16'-0"	16'-0"	12'-3"	8'-2"	5'-6"	3
	2x8	16'-0"	16'-0"	16'-0"	15'-11"	11'-8"	
42 140 MPH EXP C	2x4	13'-11"	6'-1"	3'-2"	1'-4"	0'-1"	
	2x6	14'-6"	14'-6"	10'-3"	6'-8"	4'-4"	4
	2x8	14'-6"	14'-6"	14'-6"	13'-4"	9'-7"	
50 140 MPH EXP C	2x4	11'-8"	5'-0"	2'-5"	0'-10"	0'-0"	
	2x6	13'-3"	13'-3"	8'-5"	5'-4"	3'-3"	4
	2x8	13'-3"	13'-3"	13'-3"	10'-11"	7'-8"	
60 140 MPH EXP C	2x4	9'-8"	4'-0"	1'-9"	0'-4"	0'-0"	
	2x6	12'-2"	11'-7"	6'-9"	4'-1"	2'-4"	4
	2x8	12'-2"	12'-2"	12'-2"	8'-9"	6'-0"	

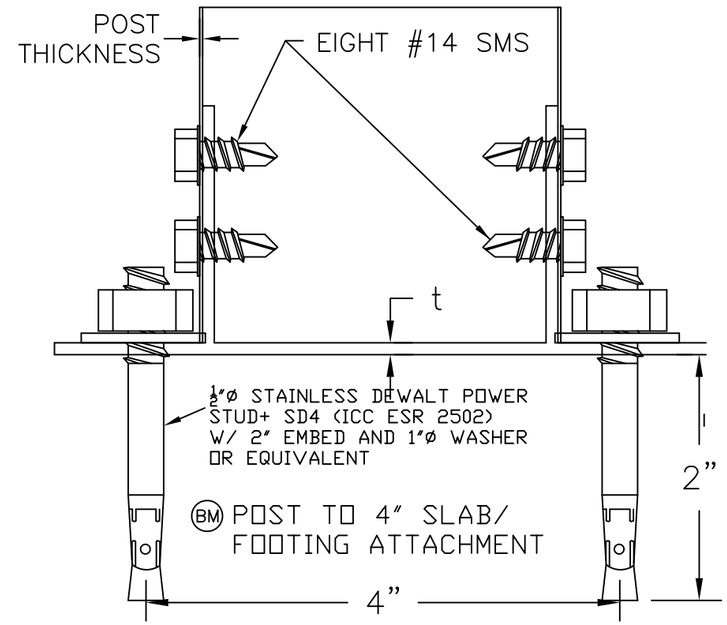

(BM) POST TO 4" SLAB/
FOOTING ATTACHMENT

6063T6 ALUMINUM BRACKET OR ASTM A36 STEEL
t = 0.090" >> SLAB ATTACH FOR 130 EXP B/110 MPH EXP C
t = 0.090" >> FOOTING d = 31" MAX

Registered Professional Engineer (Civil)
CERTIFICATE NO. 39702
CARL PUTNAM
Date Signed
ARIZONA, U.S.A.
Expires 09/30/2024

JAN 20 2023

Amerimax EXTERIOR HOME PRODUCTS
28921 US Hwy 74
Romoland, CA 92585

BEJ/CP

SCALE: NTS	NAME: Component Parts & Connection Details	
DATE:	FILE#: CD09-2021	SHEET: 9 of 9

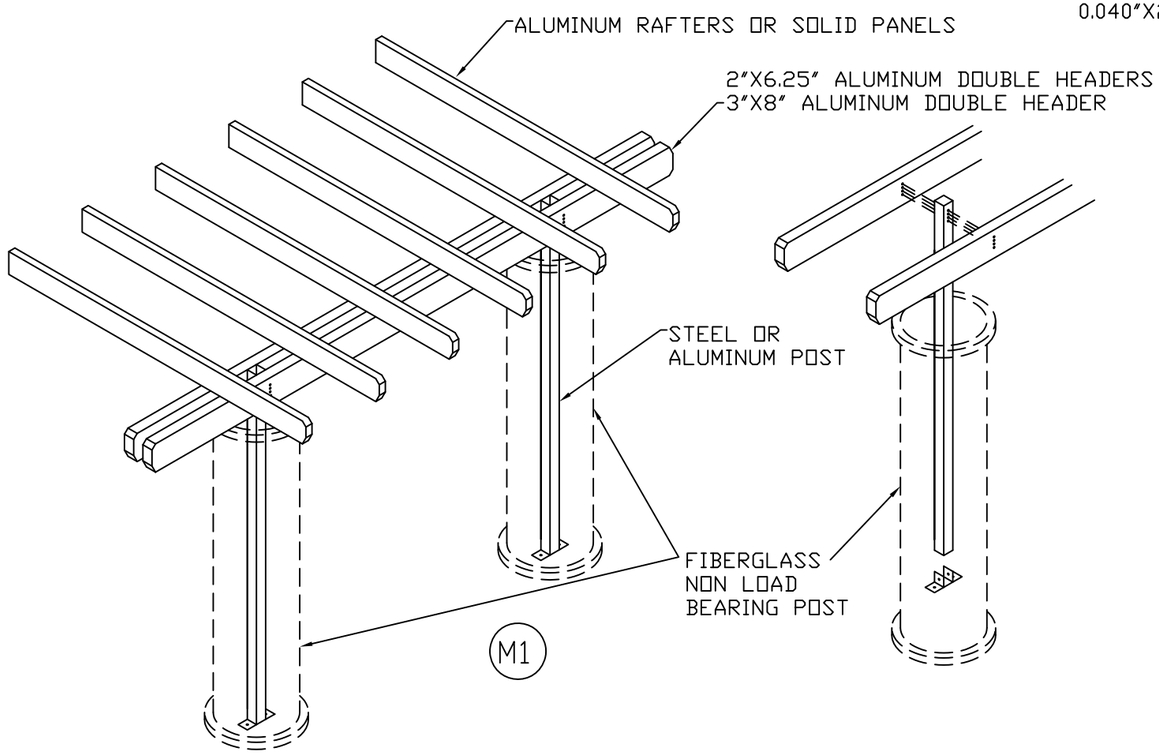

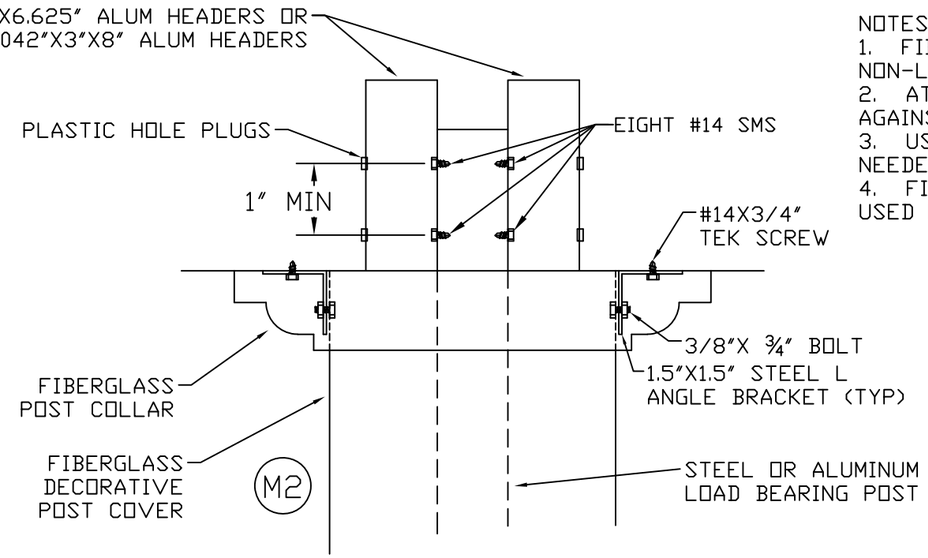

NOTES:
1. FIBERGLASS POSTS ARE NON-LOAD BEARING.
2. ATTACHMENT TO HOLD COVERING AGAINST MINOR LATERAL FORCES.
3. USE MULTIPLE BRACKETS AS NEEDED.
4. FIBERGLASS POSTS MAY BE USED FOR ANY STRUCTURE.

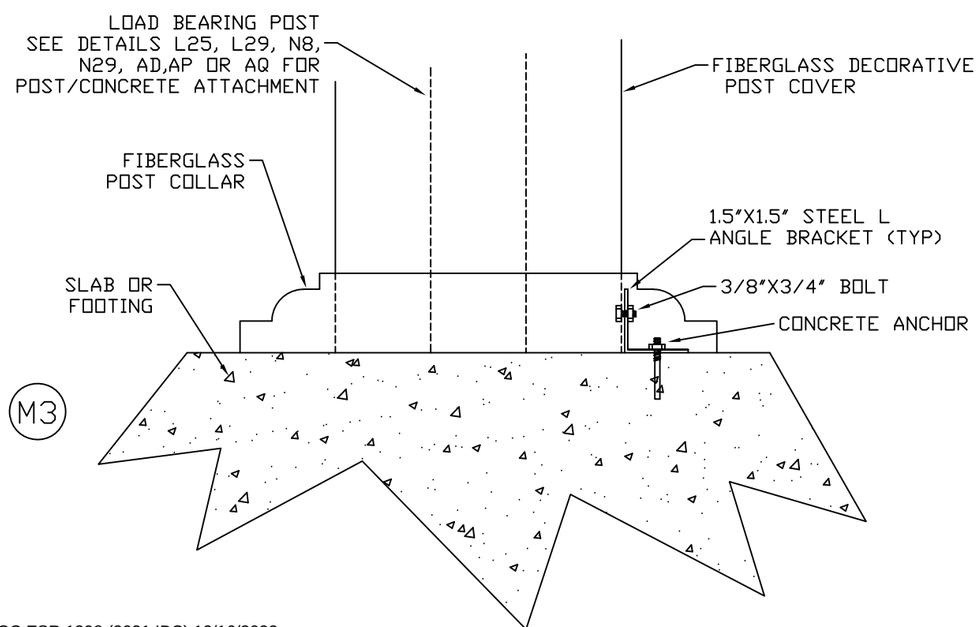

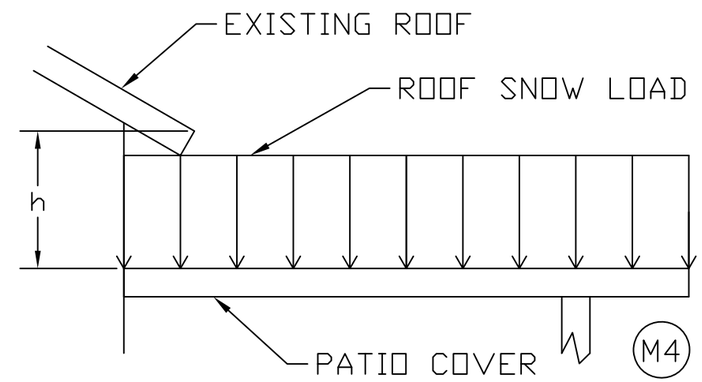

STRUCTURES COMPLYING WITH THIS DETAIL DO NOT REQUIRE ADDITIONAL DRIFTING SNOW CONSIDERATIONS

GROUND SNOW LOAD (PSF)	MAXIMUM "h" (IN)
10	9
15	14
20	17
25	18
30	20
36	23
42	26
50	30
60	33

Registered Professional Engineer (Civil)
CERTIFICATE NO. 39702
CARL PUTNAM
Date Signed
ARIZONA U.S.A.
Expires 09/30/2024

JAN 20 2023
Engineer's Stamp

Amerimax EXTERIOR HOME PRODUCTS
28921 US Hwy 74
Romoland, CA 92585

DRAWN BY: CP	TYPE:	
SCALE: NTS	NAME: Miscellaneous Details	
DATE:	FILE#: Misc1a-2021	SHEET:

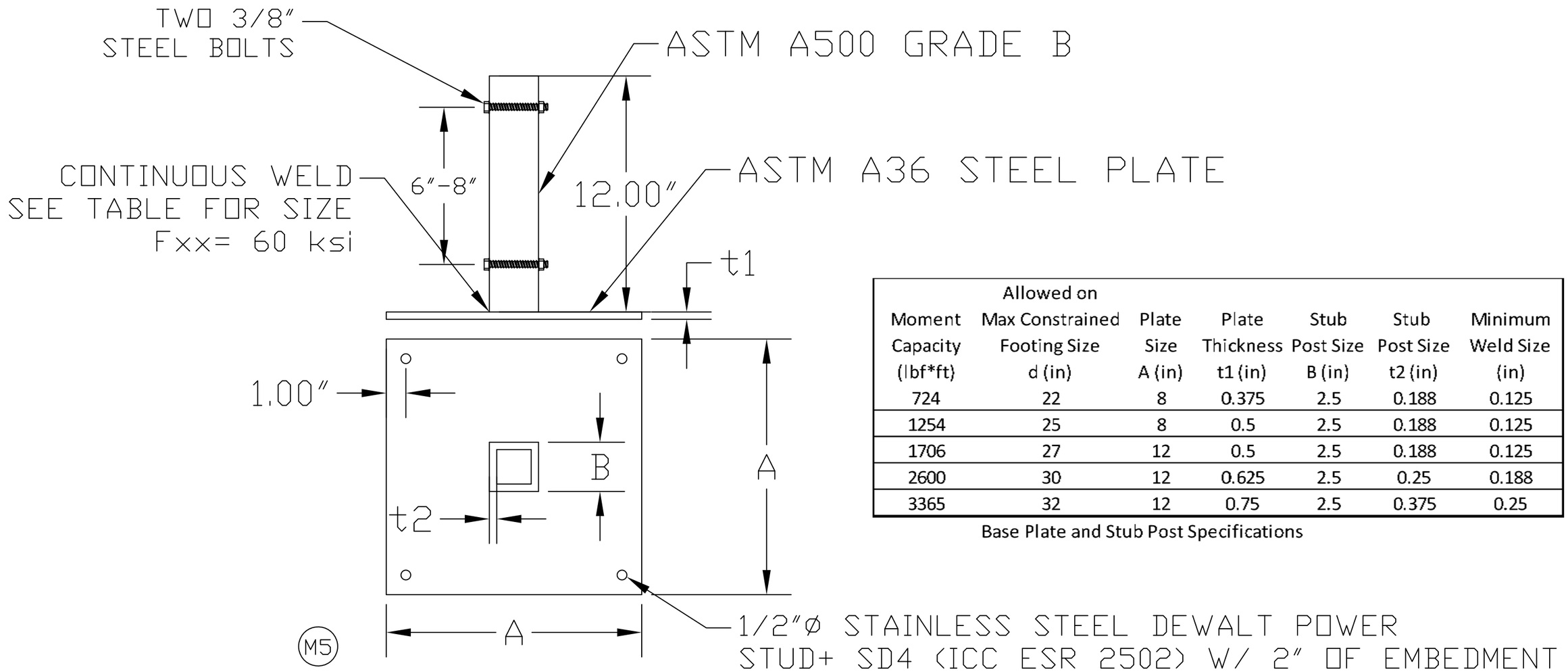

Moment Capacity (lbf*ft)	Allowed on Max Constrained Footing Size d (in)	Plate Size A (in)	Plate Thickness t1 (in)	Stub Post Size B (in)	Stub Post Size t2 (in)	Minimum Weld Size (in)
724	22	8	0.375	2.5	0.188	0.125
1254	25	8	0.5	2.5	0.188	0.125
1706	27	12	0.5	2.5	0.188	0.125
2600	30	12	0.625	2.5	0.25	0.188
3365	32	12	0.75	2.5	0.375	0.25

Base Plate and Stub Post Specifications

WELDED MOMENT RESISTING STEEL BASE PLATE
ALTERNATIVE TO POST EMBEDMENT IN CONCRETE FOOTING
THE WELDED POST BRACKET MUST BE VERIFIED TO
COMPLY WITH THE REQUIREMENTS IN DETAIL M5 OF THESE
PLANS AND FABRICATED IN ACCORDANCE W/ 2021 IBC
SECTION 1704.2.5.1 BY AN APPROVED FABRICATOR TO THE
SATISFACTION OF THE CODE OFFICIAL

Registered Professional Engineer (Civil)
CERTIFICATE NO. 39702
CARL PUTNAM
Date Signed
ARIZONA U.S.A.
Expires 09/30/2024

JAN 20 2023
Engineer's Stamp

Amerimax™ EXTERIOR HOME PRODUCTS
28921 US Hwy 74
Romoland, CA 92585

DRAWN BY: CP	TYPE:	
SCALE: NTS	NAME: Miscellaneous Details	
DATE:	FILE#: Misc1b–2021	SHEET:

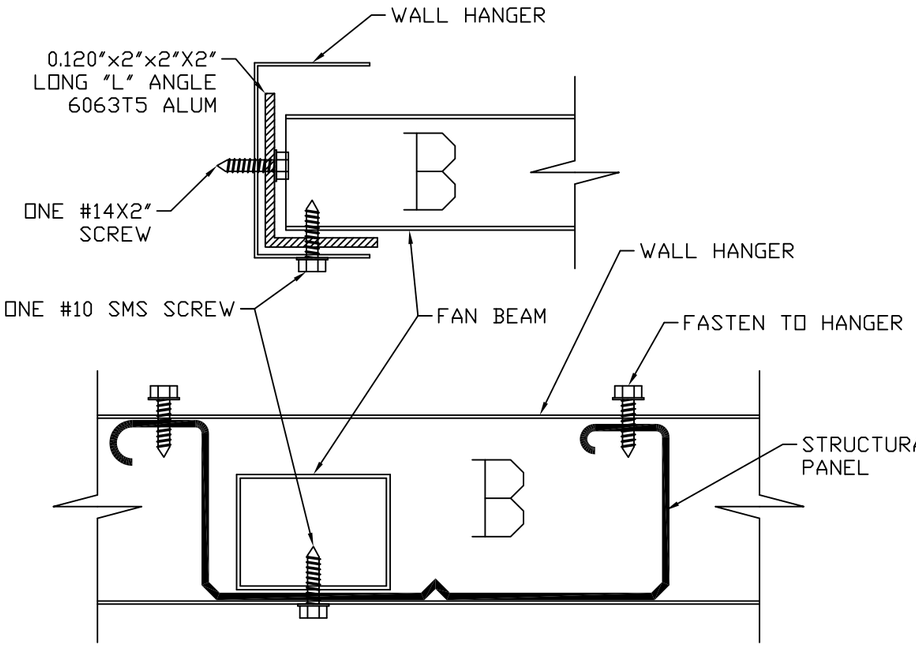

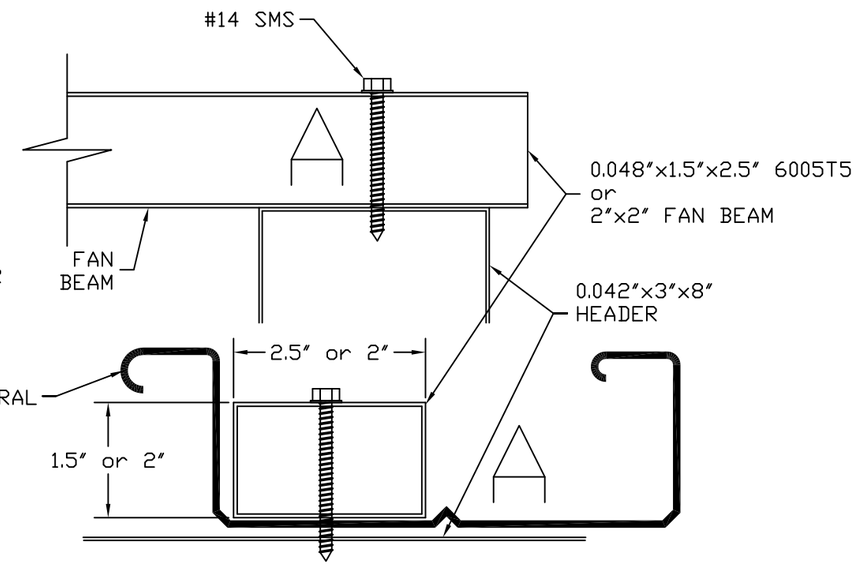

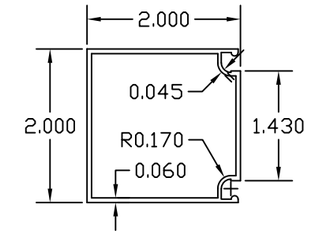

2"X2" FAN BEAM
6063T5 ALUM
NO ORIENTATION
SPECIFIED

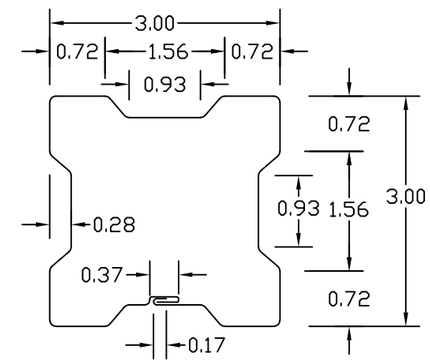

t = 0.041"

3" X 3" CLOVERLEAF HEADER
(A-653 Fy=40 KSI STEEL)

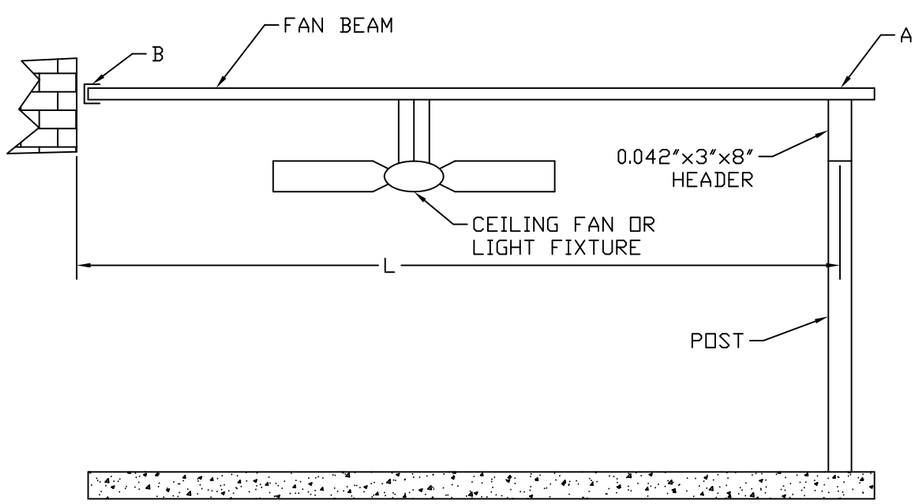

CONFORMANCE TO THE APPLICABLE ELECTRICAL CODE IS OUTSIDE THE SCOPE OF THIS DETAIL AND MUST BE APPROVED SEPERATELY.

Weight of fan/lights	Allowable Fan Beam Spans	
	0.048"x1.5"x2.5"	2"x2" Fan Beam 3x3 Steel Beam
30 lbs	15'-10"	23'

Registered Professional Engineer (Civil)
CERTIFICATE NO. 39702
CARL PUTNAM
Date Signed
ARIZONA U.S.A.
Expires 09/30/2024

JAN 20 2023

Amerimax
EXTERIOR HOME PRODUCTS
28921 US Hwy 74
Romoland, CA 92585

DRAWN BY: CP	TYPE:	
SCALE: NTS	NAME: Miscellaneous Details	
DATE:	FILE#: Misc2–2021	SHEET:

7.0 POST AND FASTENER REQUIREMENTS FOR COMMERCIAL AND PATIO STRUCTURES

Trib Width (ft)	Allowable Width for Attached Two Post Structures on Slab — Live or Ground Snow Load 10 psf	20 psf
3	45'-5"	23'-9"
3.5	38'-11"	20'-4"
4	34'-1"	17'-10"
4.5	30'-3"	15'-10"
5	27'-3"	14'-3"
5.5	24'-9"	12'-11"
6	22'-8"	11'-10"
6.5	20'-11"	10'-11"
7	19'-5"	10'-2"
7.5	18'-2"	n/a
8	17'-0"	n/a
8.5	16'-0"	n/a
9	15'-1"	n/a

Table 7.1

Table7.3: Required Number of Fasteners for Shearing Loads

Table 7.4: Required Number of Fasteners for Tension Loads

		Footer Size d (in)	Design Uplift (lbs)	Aluminum Material Gage (in) 0.024 A #14 SMS 96	0.024 B 3/8" B BOLT 590	0.032 C 3/8" B BOLT 788	0.032 D #14 SMS 171	0.040 E #14 SMS 210	0.040 F 3/8" B BOLT 924	0.060 G #14 SMS 320	0.060 H 3/8" B BOLT 1384	Steel Gage (in) 0.041 I #14 SMS 507	0.041 J 3/8" B BOLT 2030	Aluminum Gage (in) 0.036 K 3/8" B BOLT 369	0.06 L #14 SMS 153	0.060 M 3/8" B BOLT 577	0.090 N 3/8" B BOLT 865	0.090 O #14 SMS 213	Design Uplift (lbs)	Footer Size d (in)
		12	90	1	1	1	1	1	1	1	1	1	1	1	1	1	1	1	90	12
		13	114	2	1	1	1	1	1	1	1	1	1	1	1	1	1	1	114	13
		14	143	2	1	1	1	1	1	1	1	1	1	1	1	1	1	1	143	14
		15	176	2	1	1	2	1	1	1	1	1	1	1	2	1	1	1	176	15
		16	213	3	1	1	2	2	1	1	1	1	1	1	2	1	1	2	213	16
		17	256	3	1	1	2	2	1	1	1	1	1	1	2	1	1	2	256	17
		18	304	4	1	1	2	2	1	1	1	1	1	1	2	1	1	2	304	18
		19	357	4	1	1	3	2	1	2	1	1	1	1	3	1	1	2	357	19
		20	417	5	1	1	3	2	1	2	1	1	1	2	3	1	1	2	417	20
		21	482	6	1	1	3	3	1	2	1	1	1	2	4	1	1	3	482	21
		22	555	6	1	1	4	3	1	2	1	2	1	2	4	1	1	3	555	22
		23	634	7	2	1	4	4	1	2	1	2	1	2	5	2	1	3	634	23
		24	720	8	2	1	5	4	1	3	1	2	1	2	5	2	1	4	720	24
	20 psf Slab 115C	25	814	9	2	2	5	4	1	3	1	2	1	3	6	2	1	4	814	25
Lattice Slab 115C	10 psf Slab 105B	881	10	2	2	6	5	1	3	1	2	1	3	6	2	2	5	881	Slab	
		26	915	10	2	2	6	5	1	3	1	2	1	3	6	2	2	5	915	26
	10 psf Slab 110B	969	11	2	2	6	5	2	4	1	2	1	3	7	2	2	5	969	Slab	
		27	1025	11	2	2	6	5	2	4	1	3	1	3	7	2	2	5	1025	27
	10 psf Slab 115B	1056	11	2	2	7	6	2	4	1	3	1	3	7	2	2	5	1056	Slab	
		28	1143	12	2	2	7	6	2	4	1	3	1	4	8	2	2	6	1143	28
		29	1270	14	3	2	8	7	2	4	1	3	1	4	9	3	2	6	1270	29
	10 psf Slab 110C	1309	14	3	2	8	7	2	5	1	3	1	4	9	3	2	7	1309	Slab	
		30	1406	15	3	2	9	7	2	5	2	3	1	4	10	3	2	7	1406	30
	10 psf Slab 115C	1475	16	3	2	9	8	2	5	2	3	1	4	10	3	2	7	1475	Slab	
		31	1552	n/a	3	2	10	8	2	5	2	4	1	5	11	3	2	8	1552	31
		32	1707	n/a	3	3	10	9	2	6	2	4	1	5	12	3	2	9	1707	32
		33	1872	n/a	4	3	11	9	3	6	2	4	1	6	13	4	3	9	1872	33
		34	2047	n/a	4	3	12	10	3	7	2	5	2	6	14	4	3	10	2047	34
		35	2233	n/a	4	3	14	11	3	7	2	5	2	7	15	4	3	11	2233	35
		36	2430	n/a	5	4	15	12	3	8	2	5	2	7	16	5	3	12	2430	36
		37	2638	n/a	5	4	16	13	3	9	2	6	2	8	n/a	5	4	13	2638	37
		38	2858	n/a	5	4	n/a	14	4	9	3	6	2	8	n/a	5	4	14	2858	38
		39	3090	n/a	6	4	n/a	15	4	10	3	7	2	9	n/a	6	4	15	3090	39
		40	3333	n/a	6	5	n/a	16	4	11	3	7	2	10	n/a	6	4	16	3333	40
		41	3590	n/a	7	5	n/a	n/a	4	12	3	8	2	10	n/a	7	5	n/a	3590	41
		42	3859	n/a	7	5	n/a	n/a	5	13	3	8	2	11	n/a	7	5	n/a	3859	42
		43	4141	n/a	8	6	n/a	n/a	5	13	3	9	3	12	n/a	8	5	n/a	4141	43
		44	4437	n/a	8	6	n/a	n/a	5	14	4	9	3	13	n/a	8	6	n/a	4437	44
		45	4746	n/a	9	7	n/a	n/a	6	15	4	10	3	13	n/a	9	6	n/a	4746	45
		46	5070	n/a	9	7	n/a	n/a	6	16	4	10	3	14	n/a	9	6	n/a	5070	46
		47	5407	n/a	10	7	n/a	n/a	6	n/a	4	11	3	15	n/a	10	7	n/a	5407	47
		48	5760	n/a	10	8	n/a	n/a	7	n/a	5	12	3	16	n/a	10	7	n/a	5760	48
		49	6128	n/a	11	8	n/a	n/a	7	n/a	5	13	4	n/a	n/a	11	8	n/a	6128	49
		50	6510	n/a	12	9	n/a	n/a	8	n/a	5	13	4	n/a	n/a	12	8	n/a	6510	50

Fastener Terminology
#14 SMS = #14 sheet metal or SDS screw, 1/2" minimum length
3/8" B = 3/8" Diameter Steel Bolt
See General Notes for specifics on fasteners

1 Spacing between bolts and screws shall be 2.5 times the shank diamter.
2 The edge distance of bolts and screws shall be 3 times the shank diameter
3 Connections shall be arranged so that the center of resistance of the connection shall coincide with the resultant line of action of the load.

TABLE 7.6: WALL ATTACHMENTS FOR LATTICE COVERS

GRND SNOW LOAD (PSF)	Wind Speed and Exposure	# of Screws* per Rafter	ALUMINUM RAFTER SPACING 12"	16"	20"	24"	32"	36"
			MAXIMUM ALUMINUM RAFTER SPAN					
10	160 Exp B	2	26.0'	26.0'	20.0'	21.5'	16.5'	14.5'
LIVE	140 Exp C	3	26.0'	26.0'	20.0'	21.5'	19.0'	18.0'
20	170 Exp B	2	19.0'	17.5'	14.0'	11.5'	8.5'	7.5'
LIVE	170 Exp C	3	19.0'	19.0'	18.0'	16.0'	13.0'	11.5'
25	170 Exp C	2	18.0'	18.0'	14.0'	12.5'	9.5'	8.5'
30	170 Exp C	2	17.0'	16.0'	13.0'	10.5'	8.0'	7.0'
36	170 Exp C	2	16.0'	13.5'	10.5'	9.0'	6.5'	6.0'
42	170 Exp C	2	14.0'	11.5'	9.0'	7.5'	5.5'	5.0'
50	170 Exp C	2	13.0'	9.5'	7.5'	6.5'	4.5'	4.0'
60	170 Exp C	2	11.0'	8.0'	6.5'	5.5'	4.0'	3.5'
		3	12.0'	12.0'	9.5'	8.0'	6.0'	5.5'

*Screws are #14 screws w/ 1.5" embedment into G=0.5 solid wood (Douglas Fir)

TABLE 7.7 STUCCO ATTACHMENT TO WALL
ALLOWABLE DISTANCE TO FIRST ROW OF POSTS

	Ground Snow Load (psf)	1	1/4" Lag Screws 16" o/c 2	3	4	Wind Speed (mph)	Exp
Live	10	9'-1"	18'-2"	19'-0"	19'-0"	120	B
or	10	9'-1"	18'-2"	19'-0"	19'-0"	105	C
Snow	10	8'-4"	16'-9"	19'-0"	19'-0"	110	C
	10	7'-8"	15'-5"	19'-0"	19'-0"	115	C
	10	6'-1"	12'-2"	18'-3"	19'-0"	130	C
	10	4'-7"	9'-2"	13'-10"	18'-5"	150	C
Live	20	4'-11"	9'-11"	14'-10"	17'-0"	130	C
or	20	4'-11"	9'-11"	14'-10"	17'-0"	140	C
Snow	20	4'-7"	9'-2"	13'-10"	17'-0"	150	C
	25	5'-5"	10'-10"	16'-0"	16'-0"	130	C
	25	5'-3"	10'-6"	15'-10"	16'-0"	140	C
	25	4'-7"	9'-2"	13'-10"	16'-0"	150	C
	30	4'-7"	9'-2"	13'-9"	15'-0"	130	C
	30	4'-7"	9'-2"	13'-9"	15'-0"	140	C
	30	4'-6"	9'-1"	13'-8"	15'-0"	150	C
	35.7	3'-10"	7'-9"	11'-8"	15'-0"	140	C
	35.7	3'-10"	7'-9"	11'-8"	15'-0"	150	C
	42	3'-4"	6'-8"	10'-0"	13'-5"	140	C
	42	3'-4"	6'-8"	10'-0"	13'-5"	150	C
	50	2'-10"	5'-8"	8'-6"	11'-4"	150	C
	60	2'-4"	4'-9"	7'-2"	9'-6"	150	C

Lag = 1/4" Lag Screw with 2.5" penetration into G=0.5 wood (Douglas Fir)
Lattice Structures always use 115 mph Exposure B for the wind condition

Notes for Table 7.5
#1 Clearspan on this chart is the distance from the wall to the first row of posts.
#2 (ANC1) DEWALT Power Stud+ SD4 3/8" diameter and 1.5" embed and 1" dia steel washer: ICC ESR 2502 or other anchor w/ 320# allowable shear and 170# allowable tensile vs live, snow, wind and seismic loads.
#3 (ANC2) Masonry anchors must have an allowable shear value of 320# and 170# tensile for live, snow, wind or seismic loads or be specified by a design professional.
#4 (ANC3) #14 screws must have 1.5" of penetration into solid wood.
#5 (ANC 4) 1/4" Lag screws must have 2 1/4" of penetration into studs and 0.5" washers Lag and wood screws must be installed as per AWC NDS Section 12.1.4 and 12.1.5. See General Note #11 for washer specifications.
#6 10 and 20 psf are live or snow loads, 25- 60 psf are snow loads.
#7 For ANC3 and ANC4 wood framing imust be SG=0.5 or denser (Douglas Fir- Larch)
#8 "n/a" indicates maximum panel span in this report or ICC ESR 2488 was reached by a lesser amount of fasteners.

TABLE 7.5: WALL ATTACHMENTS FOR SOLID COVER STRUCTURES

LIVE/ SNOW LOAD (PSF)	WIND SPEED (MPH) AND EXPOSURE		ALLOWABLE PANEL SPAN FOR GIVEN FASTENER AND NUMBER — CONCRETE (#2) OR MASONRY (#3) ANCHOR O/C SPACING 16"	8"	#14 SCREW (#4) PER 16" 1/4" LAG SCREW (#5) PER 16" 1	2	3	4
10	105	B	21'	n/a	18'	21'	n/a	n/a
10	100	C	21'	n/a	18'	21'	n/a	n/a
10	110	C	21'	n/a	16.5'	21'	n/a	n/a
10	115	C	17'	n/a	15'	18'	n/a	n/a
10	130	C	16'	n/a	11.5'	17'	n/a	n/a
10	140	C	15'	n/a	10'	16'	n/a	n/a
10	150	C	13'	14.5'	8.5'	15'	n/a	n/a
10	170	C	10'	12.5'	6.5'	13'	n/a	n/a
20	110	C	15'	n/a	9.5'	15'	n/a	n/a
20	130	C	14'	n/a	9.5'	14'	n/a	n/a
20	170	C	10'	12.5'	6.5'	13'	n/a	n/a
25	110	C	15'	n/a	10'	15'	n/a	n/a
25	115	C	14.5'	n/a	10'	15'	n/a	n/a
25	130	C	14'	n/a	10'	14'	n/a	n/a
30	110	C	14'	n/a	8.5'	15'	n/a	n/a
30	115	C	14'	n/a	8.5'	14'	n/a	n/a
30	130	C	13.5'	n/a	8.5'	14'	n/a	n/a
35.7	115	C	13.5'		7'	14'	n/a	n/a
35.7	130	C	13'	13.5'	7'	14'	n/a	n/a
42	110	C	13'	13.5'	6'	13'	14'	n/a
42	130	C	11.5'	13'	6'	13'	14'	n/a
50	130	C	10.5'	12'	5'	10'	13'	n/a
60	130	C	9'	11'	4'	8'	12'	n/a

Amerimax Exterior Home Products
28921 US Hwy 74
Romoland, CA 92585

Carl Putnam, P. E.
3441 Ivylink Place
Lynchburg, VA 24503
(434) 384-2514
carlputnam@comcast.net

Registered Professional Engineer (Civil) CERTIFICATE NO. 39702 CARL PUTNAM Date Signed ARIZONA U.S.A. Expires 09/30/2024

Misc3-2021

JAN 20 2023

7.0 ALTERNATIVE FOOTING TABLES (PAGE 1

EQUIVALENT UPLIFT AND CONSTRAINED FOOTINGS					
CONSTRAINED FOOTING (IN)	NON CONSTRAINED FOOTING (IN)	DIAMETER OF CIRCULAR FOOTINGS (IN)			
		12"	18"	24"	36"
		DEPTH OF CIRCULAR FOOTINGS (IN) CONSTRAINED			
14"	17"	24"	14"	14"	14"
15"	18"	30"	15"	15"	15"
16"	19"	36"	16"	16"	16"
17"	21"	43"	19"	17"	17"
18"	22"	52"	23"	18"	18"
19"	23"	61"	27"	19"	19"
20"	24"	n/a	31"	20"	20"
21"	26"	n/a	36"	21"	21"
22"	27"	n/a	42"	24"	22"
23"	28"	n/a	48"	27"	23"
24"	30"	n/a	54"	31"	24"
25"	31"	n/a	61"	35"	25"
26"	32"	n/a	69"	39"	26"
27"	34"	n/a	77"	44"	27"
28"	35"	n/a	86"	49"	28"
29"	36"	n/a	n/a	54"	29"
30"	38"	n/a	n/a	60"	30"
31"	39"	n/a	n/a	66"	31"
32"	40"	n/a	n/a	72"	32"
33"	42"	n/a	n/a	79"	35"
34"	43"	n/a	n/a	87"	39"
35"	44"	n/a	n/a	95"	42"
36"	46"	n/a	n/a	103"	46"
37"	47"	n/a	n/a	112"	50"
38"	48"	n/a	n/a	n/a	54"
39"	50"	n/a	n/a	n/a	58"
40"	51"	n/a	n/a	n/a	63"
41"	53"	n/a	n/a	n/a	68"
42"	54"	n/a	n/a	n/a	73"
43"	55"	n/a	n/a	n/a	78"
44"	57"	n/a	n/a	n/a	84"

TABLE 7.8

CONVERSION TO SQUARE TOP FOOTING

	For UPLIFT Footings Only			
	Footing Depth			
	18"	24"	30"	36"
d (in)	Required Side of Square Footing			
20"	21"	18"	16"	15"
21"	23"	20"	18"	16"
22"	24"	21"	19"	17"
23"	26"	23"	20"	18"
24"	28"	24"	21"	20"
25"	29"	26"	23"	21"
26"	31"	27"	24"	22"
27"	33"	29"	26"	23"
28"	35"	30"	27"	25"
29"	37"	32"	29"	26"
30"	39"	34"	30"	27"
31"	41"	35"	32"	29"
32"	43"	37"	33"	30"
33"	45"	39"	35"	32"
34"	47"	40"	36"	33"
35"	49"	42"	38"	35"
36"	51"	44"	39"	36"
37"	53"	46"	41"	38"
38"	55"	48"	43"	39"
39"	57"	50"	44"	41"
40"	60"	52"	46"	42"
41"	N/A	54"	48"	44"
42"	N/A	56"	50"	45"
43"	N/A	58"	51"	47"
44"	N/A	60"	53"	49"
45"	N/A	N/A	55"	50"
46"	N/A	N/A	57"	52"
47"	N/A	N/A	59"	54"
48"	N/A	N/A	N/A	55"
49"	N/A	N/A	N/A	57"
50"	N/A	N/A	N/A	59"

TABLE 7.9

UPLIFT FOOTING SIZE BASED ON ACTUAL SITE DIMENSIONS

Solid Cover Trib Area (sq ft)	Wind Condition For Attached Structures: 100 MPH Exp B	110 MPH Exp B	115 MPH Exp B	95 MPH Exp C or	100 MPH Exp C or	105 MPH Exp C or	110 MPH Exp C or	115 MPH Exp C or	120 MPH Exp C or	130 MPH Exp C or	140 MPH Exp C or	Lattice Cover Trib Area (sq ft)
	Wind Condition For Freestanding Structures: 120 MPH Exp B	130 MPH Exp B	140 MPH Exp B	110 MPH Exp C	120 MPH Exp C	120 MPH Exp C	130 MPH Exp C	130 MPH Exp C	140 MPH Exp C	150 MPH Exp C	160 MPH Exp C	
	Required "d" of Footing (in)											
15	15"	16"	16"	16"	17"	17"	18"	18"	19"	20"	21"	25
20	16"	17"	18"	18"	18"	19"	19"	20"	21"	22"	23"	33
25	17"	19"	19"	19"	20"	20"	21"	22"	22"	24"	25"	42
30	19"	20"	20"	20"	21"	22"	22"	23"	24"	25"	26"	50
35	20"	21"	22"	21"	22"	23"	23"	24"	25"	26"	28"	58
40	20"	22"	23"	22"	23"	24"	25"	25"	26"	28"	29"	67
45	21"	23"	23"	23"	24"	25"	26"	26"	27"	29"	30"	75
50	22"	24"	24"	24"	25"	26"	26"	27"	28"	30"	31"	83
55	23"	24"	25"	25"	26"	26"	27"	28"	29"	31"	32"	92
60	23"	25"	26"	25"	26"	27"	28"	29"	30"	31"	33"	100
65	24"	26"	26"	26"	27"	28"	29"	30"	31"	32"	34"	108
70	25"	26"	27"	27"	28"	29"	30"	30"	31"	33"	35"	117
80	26"	28"	28"	28"	29"	30"	31"	32"	33"	35"	36"	133
90	27"	29"	30"	29"	30"	31"	32"	33"	34"	36"	38"	150
100	28"	30"	31"	30"	31"	32"	33"	34"	35"	37"	39"	167
110	29"	31"	32"	31"	32"	33"	34"	35"	37"	39"	41"	183
120	29"	32"	33"	32"	33"	34"	35"	36"	38"	40"	42"	200
130	30"	32"	33"	33"	34"	35"	36"	37"	39"	41"	43"	217
140	31"	33"	34"	34"	35"	36"	37"	38"	40"	42"	44"	233
150	32"	34"	35"	34"	36"	37"	38"	39"	40"	43"	45"	250
160	32"	35"	36"	35"	36"	38"	39"	40"	41"	44"	46"	267
170	33"	35"	37"	36"	37"	39"	40"	41"	42"	45"	47"	283
180	34"	36"	37"	37"	38"	39"	41"	42"	43"	45"	48"	300
190	34"	37"	38"	37"	39"	40"	41"	43"	44"	46"	49"	317
200	35"	37"	39"	38"	39"	41"	42"	43"	45"	47"	49"	333
210	36"	38"	39"	39"	40"	41"	43"	44"	45"	48"	50"	350
220	36"	39"	40"	39"	41"	42"	43"	45"	46"	49"	51"	367
230	37"	39"	40"	40"	41"	43"	44"	45"	47"	49"	52"	383
240	37"	40"	41"	40"	42"	43"	45"	46"	47"	50"	53"	400
250	38"	40"	42"	41"	42"	44"	45"	47"	48"	51"	53"	417
260	38"	41"	42"	41"	43"	44"	46"	47"	49"	51"	54"	433
270	39"	41"	43"	42"	43"	45"	46"	48"	49"	52"	55"	450
280	39"	42"	43"	42"	44"	45"	47"	48"	50"	53"	55"	467
290	40"	42"	44"	43"	44"	46"	48"	49"	50"	53"	56"	483
300	40"	43"	44"	43"	45"	47"	48"	50"	51"	54"	57"	500
310	40"	43"	45"	44"	45"	47"	49"	50"	52"	54"	57"	517
320	41"	44"	45"	44"	46"	48"	49"	51"	52"	55"	58"	533
330	41"	44"	46"	45"	46"	48"	50"	51"	53"	56"	58"	550
340	42"	45"	46"	45"	47"	49"	50"	52"	53"	56"	59"	567
350	42"	45"	46"	46"	47"	49"	51"	52"	54"	57"	60"	583
360	43"	45"	47"	46"	48"	49"	51"	53"	54"	57"	60"	600

TABLE 7.10

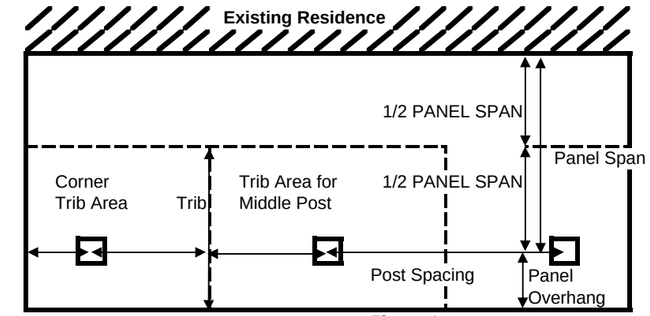

Figure 1

Determine Trib Area from Figure 1

INSTRUCTIONS TO USE TABLE 7.10

1. TABLE DETERMINES UPLIFT FOOTING SIZE ONL\
   MAY BE USED FOR FREESTANDING COVERS.
   DOES NOT AFFECT REQUIRED CONSTRAINED FOOTING SIZE.
2. DETERMINE ACTUAL TRIBUTARY AREA
   FOR MIDDLE POSTS THIS IS:
   TRIB WIDTH x POST SPACING
   FOR END POSTS THIS IS:
   (OVERHANG+ HALF OF POST SPACING) x TRIB WIDTH
3. DETERMINE FOOTING SIZE FOR WIND CONDITION
4. FOR LATTICE USE LAST COLUMN FOR TRIB AREA
5. INTERMEDIATE VALUES MAY BE INTERPOLATED

Amerimax Exterior Home Products
28921 US Hwy 74
Romoland, CA 92585

Carl Putnam, P. E.
3441 Ivylink Place
Lynchburg, VA 24503

Misc4a-2021

Registered Professional Engineer (Civil)
CERTIFICATE NO.
39702
CARL PUTNAM
Date Signed
ARIZONA U.S.A.
Expires 09/30/2024

JAN 20 2023

7.0 ALTERNATIVE FOOTING TABLES (PAGE 2)

Table 7.11 Uplift Footing size for Different Wind Loads

	Cubed Footing Size d x d x d (in)																																			
95 MPH EXPOSURE B	16	17	18	19	20	21	22	23	24	25	26	27	28	29	30	31	32	33	34	35	36	37	38	39	40	41	42	43	44	45	46	47	48	49	50	
100 MPH EXPOSURE B	17	18	19	20	21	22	23	24	25	26	27	28	29	30	31	32	33	34	35	36	37	38	39	40	41	43	44	45	46	47	48	49	50	51	52	
105 MPH EXPOSURE B	17	18	19	20	21	23	24	25	26	27	28	29	30	31	32	33	34	35	36	38	39	40	41	42	43	44	45	46	47	48	49	50	51	53	54	
110 MPH EXPOSURE B	18	19	20	21	22	23	24	25	27	28	29	30	31	32	33	34	35	37	38	39	40	41	42	43	44	45	47	48	49	50	51	52	53	54	55	
115 MPH EXPOSURE B	18	19	21	22	23	24	25	26	27	29	30	31	32	33	34	35	37	38	39	40	41	42	43	45	46	47	48	49	50	51	53	54	55	56	57	
120 MPH EXPOSURE B	19	20	21	22	24	25	26	27	28	29	31	32	33	34	35	36	38	39	40	41	42	44	45	46	47	48	49	51	52	53	54	55	57	58	59	
130 MPH EXPOSURE B	20	21	22	24	25	26	27	29	30	31	32	34	35	36	37	39	40	41	42	44	45	46	47	49	50	51	52	53	55	56	57	58	60	61	62	
140 MPH EXPOSURE B	21	22	24	25	26	27	29	30	31	33	34	35	37	38	39	41	42	43	45	46	47	48	50	51	52	54	55	56	58	59	60	62	63	64	65	
150 MPH EXPOSURE B	22	23	25	26	27	29	30	32	33	34	36	37	38	40	41	43	44	45	47	48	49	51	52	54	55	56	58	59	60	62	63	64	66	67	69	
160 MPH EXPOSURE B	23	24	26	27	29	30	32	33	34	36	37	39	40	42	43	44	46	47	49	50	52	53	54	56	57	59	60	62	63	65	66	67	69	70	72	
170 MPH EXPOSURE B	24	25	27	28	30	31	33	34	36	37	39	40	42	43	45	46	48	49	51	52	54	55	57	58	60	61	63	64	66	67	69	70	72	73	75	
95 MPH EXPOSURE C	18	19	20	21	23	24	25	26	27	28	29	30	32	33	34	35	36	37	38	39	41	42	43	44	45	46	47	48	50	51	52	53	54	55	56	
100 MPH EXPOSURE C	19	20	21	22	23	24	26	27	28	29	30	31	33	34	35	36	37	38	40	41	42	43	44	45	47	48	49	50	51	52	54	55	56	57	58	
105 MPH EXPOSURE C	19	20	22	23	24	25	27	28	29	30	31	33	34	35	36	37	39	40	41	42	43	45	46	47	48	49	51	52	53	54	55	57	58	59	60	
110 MPH EXPOSURE C	20	21	22	24	25	26	27	29	30	31	32	34	35	36	37	39	40	41	42	44	45	46	47	49	50	51	52	54	55	56	57	59	60	61	62	
115 MPH EXPOSURE C	21	22	23	24	26	27	28	30	31	32	33	35	36	37	39	40	41	42	44	45	46	47	49	50	51	53	54	55	56	58	59	60	62	63	64	
120 MPH EXPOSURE C	21	22	24	25	26	28	29	30	32	33	34	36	37	38	40	41	42	44	45	46	48	49	50	52	53	54	56	57	58	59	61	62	63	65	66	
130 MPH EXPOSURE C	22	24	25	27	28	29	31	32	33	35	36	38	39	40	42	43	45	46	47	49	50	52	53	54	56	57	59	60	61	63	64	66	67	68	70	
140 MPH EXPOSURE C	23	25	26	28	29	31	32	34	35	37	38	40	41	43	44	46	47	48	50	51	53	54	56	57	59	60	62	63	65	66	68	69	70	72	73	
150 MPH EXPOSURE C	25	26	28	29	31	32	34	35	37	38	40	42	43	45	46	48	49	51	52	54	55	57	58	60	62	63	65	66	68	69	71	72	74	75	77	
160 MPH EXPOSURE C	26	27	29	31	32	34	35	37	39	40	42	43	45	47	48	50	51	53	55	56	58	59	61	63	64	66	67	69	71	72	74	76	77	79	80	
170 MPH EXPOSURE C	27	28	30	32	33	35	37	39	40	42	44	45	47	49	50	52	54	55	57	59	60	62	64	65	67	69	70	72	74	75	77	79	80	82	84	

Table 7.12 SMALLEST FOOTING WIDTH x WIDTH x DEPTH*

Uplift Footing (in)	CONSTRAINED CUBED FOOTING SIZE d x d x d 16"	17"	18"	19"	20"	21"	22"	23"	24"	25"	26"	27"	28"	29"	30"	31"	32"	33"	34"	35"	36"	37"	38"	39"	40"	41"	42"	43"	44"
18	20x20x15	19x19x16	18x18x18	17x17x20	17x17x21	16x16x23	15x15x25	15x15x27	14x14x29	14x14x30	13x13x32	13x13x34	13x13x36	12x12x39	12x12x41	12x12x43	11x11x45	11x11x47	11x11x50	11x11x52	10x10x55	10x10x57	10x10x59	10x10x62	10x10x65	9x9x67	9x9x70	9x9x73	9x9x75
20	24x24x14	23x23x15	22x22x17	21x21x18	20x20x20	19x19x22	19x19x23	18x18x25	17x17x27	17x17x29	16x16x30	16x16x32	15x15x34	15x15x36	14x14x38	14x14x40	14x14x42	13x13x45	13x13x47	13x13x49	12x12x51	12x12x54	12x12x56	12x12x58	11x11x61	11x11x63	11x11x66	11x11x68	11x11x71
21	26x26x14	25x25x15	24x24x16	23x23x18	22x22x19	21x21x21	20x20x23	20x20x24	19x19x26	18x18x28	18x18x30	17x17x31	17x17x33	16x16x35	16x16x37	15x15x39	15x15x41	15x15x43	14x14x45	14x14x48	14x14x50	13x13x52	13x13x54	13x13x57	13x13x59	12x12x61	12x12x64	12x12x66	12x12x69
22	28x28x13	27x27x15	26x26x16	25x25x17	24x24x19	23x23x20	22x22x22	21x21x24	21x21x25	20x20x27	19x19x29	19x19x31	18x18x32	18x18x34	17x17x36	17x17x38	16x16x40	16x16x42	16x16x44	15x15x46	15x15x48	15x15x51	14x14x53	14x14x55	14x14x57	13x13x60	13x13x62	13x13x64	13x13x67
23	31x31x13	29x29x14	28x28x16	27x27x17	26x26x18	25x25x20	24x24x21	23x23x23	22x22x25	22x22x26	21x21x28	20x20x30	20x20x32	19x19x33	19x19x35	18x18x37	18x18x39	17x17x41	17x17x43	16x16x45	16x16x47	16x16x49	15x15x51	15x15x54	15x15x56	14x14x58	14x14x60	14x14x63	14x14x65
24	33x33x13	32x32x14	30x30x15	29x29x17	28x28x18	27x27x19	26x26x21	25x25x22	24x24x24	23x23x26	23x23x27	22x22x29	21x21x31	21x21x32	20x20x34	20x20x36	19x19x38	19x19x40	18x18x42	18x18x44	17x17x46	17x17x48	17x17x50	16x16x52	16x16x54	16x16x57	15x15x59	15x15x61	15x15x63
25	36x36x12	34x34x13	33x33x15	31x31x16	30x30x17	29x29x19	28x28x20	27x27x22	26x26x23	25x25x25	24x24x27	24x24x28	23x23x30	22x22x32	22x22x33	21x21x35	21x21x37	20x20x39	20x20x41	19x19x43	19x19x45	18x18x47	18x18x49	18x18x51	17x17x53	17x17x55	17x17x57	16x16x60	16x16x62
26	38x38x12	37x37x13	35x35x14	33x33x16	32x32x17	31x31x18	30x30x20	29x29x21	28x28x23	27x27x24	26x26x26	25x25x28	25x25x29	24x24x31	23x23x33	23x23x34	22x22x36	21x21x38	21x21x40	20x20x42	20x20x44	20x20x46	19x19x48	19x19x50	18x18x52	18x18x54	18x18x56	17x17x58	17x17x60
27	41x41x12	39x39x13	37x37x14	36x36x15	34x34x17	33x33x18	32x32x19	31x31x21	30x30x22	29x29x24	28x28x25	27x27x27	26x26x29	25x25x30	25x25x32	24x24x34	24x24x35	23x23x37	22x22x39	22x22x41	21x21x43	21x21x45	21x21x47	20x20x49	20x20x51	19x19x53	19x19x55	19x19x57	18x18x59
28	43x43x12	42x42x13	40x40x14	38x38x15	37x37x16	35x35x18	34x34x19	33x33x20	32x32x22	31x31x23	30x30x25	29x29x26	28x28x28	27x27x30	26x26x31	26x26x33	25x25x35	25x25x36	24x24x38	23x23x40	23x23x42	22x22x44	22x22x46	21x21x48	21x21x50	21x21x52	20x20x54	20x20x56	20x20x58
29	45x45x12	44x44x12	42x42x14	41x41x15	39x39x16	38x38x17	36x36x19	35x35x20	34x34x21	33x33x23	32x32x24	31x31x26	30x30x27	29x29x29	28x28x31	27x27x32	27x27x34	26x26x36	26x26x37	25x25x39	24x24x41	24x24x43	23x23x45	23x23x47	22x22x49	22x22x50	22x22x52	21x21x54	21x21x57
30	47x47x12	47x47x12	45x45x13	43x43x14	41x41x16	40x40x17	38x38x18	37x37x20	36x36x21	35x35x22	34x34x24	33x33x25	32x32x27	31x31x28	30x30x30	29x29x32	28x28x33	28x28x35	27x27x37	27x27x38	26x26x40	25x25x42	25x25x44	24x24x46	24x24x48	23x23x49	23x23x51	22x22x53	22x22x55
31	50x50x12	50x50x12	48x48x13	46x46x14	44x44x15	42x42x17	41x41x18	39x39x19	38x38x21	37x37x22	36x36x23	35x35x25	34x34x26	33x33x28	32x32x29	31x31x31	30x30x33	29x29x34	29x29x36	28x28x38	28x28x39	27x27x41	26x26x43	26x26x45	25x25x47	25x25x48	24x24x50	24x24x52	23x23x54
32	52x52x12	52x52x12	51x51x13	49x49x14	47x47x15	45x45x16	43x43x18	42x42x19	40x40x20	39x39x22	38x38x23	37x37x24	36x36x26	35x35x27	34x34x29	33x33x30	32x32x32	31x31x34	30x30x35	30x30x37	29x29x39	28x28x40	28x28x42	27x27x44	27x27x46	26x26x48	26x26x49	25x25x51	25x25x53
33	55x55x12	55x55x12	54x54x13	51x51x14	49x49x15	47x47x16	46x46x17	44x44x19	43x43x20	41x41x21	40x40x23	39x39x24	38x38x25	37x37x27	36x36x28	35x35x30	34x34x31	33x33x33	32x32x35	31x31x36	31x31x38	30x30x40	29x29x41	29x29x43	28x28x45	28x28x47	27x27x49	27x27x50	26x26x52
34	57x57x12	57x57x12	57x57x12	54x54x13	52x52x15	50x50x16	48x48x17	46x46x18	45x45x19	43x43x21	42x42x22	41x41x24	40x40x25	39x39x26	38x38x28	37x37x29	36x36x31	35x35x32	34x34x34	33x33x36	32x32x37	32x32x39	31x31x41	30x30x42	30x30x44	29x29x46	29x29x48	28x28x50	28x28x51
35	60x60x12	60x60x12	60x60x12	57x57x13	55x55x14	53x53x15	51x51x17	49x49x18	47x47x19	46x46x20	44x44x22	43x43x23	42x42x24	41x41x26	40x40x27	39x39x29	38x38x30	37x37x32	36x36x33	35x35x35	34x34x37	33x33x38	33x33x40	32x32x42	31x31x43	31x31x45	30x30x47	30x30x49	29x29x50
36	62x62x12	62x62x12	62x62x12	60x60x13	58x58x14	55x55x15	53x53x16	52x52x18	50x50x19	48x48x20	47x47x21	45x45x23	44x44x24	43x43x25	42x42x27	41x41x28	40x40x30	39x39x31	38x38x33	37x37x34	36x36x36	35x35x38	34x34x39	34x34x41	33x33x43	32x32x44	32x32x46	31x31x48	31x31x50
37	65x65x12	65x65x12	65x65x12	63x63x13	61x61x14	58x58x15	56x56x16	54x54x17	52x52x19	51x51x20	49x49x21	48x48x22	46x46x24	45x45x25	44x44x26	43x43x28	42x42x29	41x41x31	40x40x32	39x39x34	38x38x35	37x37x37	36x36x39	35x35x40	35x35x42	34x34x44	33x33x45	33x33x47	32x32x49
38	68x68x12	68x68x12	68x68x12	66x66x13	64x64x14	61x61x15	59x59x16	57x57x17	55x55x18	53x53x19	51x51x21	50x50x22	49x49x23	47x47x25	46x46x26	45x45x27	44x44x29	43x43x30	42x42x32	41x41x33	40x40x35	39x39x36	38x38x38	37x37x40	36x36x41	36x36x43	35x35x45	34x34x46	34x34x48
39	70x70x12	70x70x12	70x70x12	69x69x12	67x67x13	64x64x14	62x62x16	60x60x17	58x58x18	56x56x19	54x54x20	52x52x22	51x51x23	49x49x24	48x48x26	47x47x27	46x46x28	45x45x30	44x44x31	43x43x33	42x42x34	41x41x36	40x40x37	39x39x39	38x38x41	37x37x42	37x37x44	36x36x46	35x35x47
40	73x73x12	73x73x12	73x73x12	73x73x12	70x70x13	67x67x14	65x65x15	62x62x17	60x60x18	58x58x19	56x56x20	55x55x21	53x53x23	52x52x24	50x50x25	49x49x27	48x48x28	47x47x29	46x46x31	45x45x32	44x44x34	43x43x35	42x42x37	41x41x38	40x40x40	39x39x42	38x38x43	38x38x45	37x37x47
41	76x76x12	76x76x12	76x76x12	76x76x12	73x73x13	70x70x14	67x67x15	65x65x16	63x63x17	61x61x19	59x59x20	57x57x21	56x56x22	54x54x24	53x53x25	51x51x26	50x50x28	49x49x29	48x48x30	47x47x32	45x45x33	45x45x35	44x44x36	43x43x38	42x42x39	41x41x41	40x40x43	39x39x44	39x39x46
42	79x79x12	79x79x12	79x79x12	79x79x12	76x76x13	73x73x14	70x70x15	68x68x16	66x66x17	64x64x18	62x62x19	60x60x21	58x58x22	56x56x23	55x55x25	54x54x26	52x52x27	51x51x29	50x50x30	49x49x31	48x48x33	46x46x34	46x46x36	45x45x37	44x44x39	43x43x40	42x42x42	41x41x44	40x40x45
43	81x81x12	81x81x12	81x81x12	81x81x12	79x79x13	76x76x14	74x74x15	71x71x16	69x69x17	66x66x18	64x64x19	62x62x20	61x61x22	59x59x23	57x57x24	56x56x25	54x54x27	53x53x28	52x52x30	51x51x31	50x50x32	48x48x34	47x47x35	46x46x37	46x46x38	45x45x40	44x44x41	43x43x43	42x42x45
44	84x84x12	84x84x12	84x84x12	84x84x12	83x83x12	80x80x13	77x77x15	74x74x16	71x71x17	69x69x18	67x67x19	65x65x20	63x63x21	61x61x23	60x60x24	58x58x25	57x57x26	55x55x28	54x54x29	53x53x31	52x52x32	51x51x33	49x49x35	48x48x36	47x47x38	47x47x39	46x46x41	45x45x42	44x44x44
45	87x87x12	87x87x12	87x87x12	87x87x12	86x86x12	83x83x13	80x80x14	77x77x15	74x74x16	72x72x18	70x70x19	68x68x20	66x66x21	64x64x22	62x62x24	61x61x25	59x59x26	58x58x27	56x56x29	55x55x30	54x54x31	53x53x33	52x52x34	50x50x36	49x49x37	48x48x39	48x48x40	47x47x42	46x46x43
46	90x90x12	90x90x12	90x90x12	90x90x12	90x90x12	86x86x13	83x83x14	80x80x15	77x77x16	75x75x17	73x73x18	70x70x20	68x68x21	67x67x22	65x65x23	63x63x24	61x61x26	60x60x27	59x59x28	57x57x30	56x56x31	55x55x32	54x54x34	52x52x35	51x51x37	50x50x38	49x49x40	49x49x41	48x48x43
47	93x93x12	93x93x12	93x93x12	93x93x12	93x93x12	90x90x13	86x86x14	83x83x15	80x80x16	78x78x17	75x75x18	73x73x19	71x71x21	69x69x22	67x67x23	66x66x24	64x64x25	62x62x27	61x61x28	60x60x29	58x58x31	57x57x32	56x56x33	55x55x35	53x53x36	52x52x38	51x51x39	50x50x41	50x50x42
48	96x96x12	96x96x12	96x96x12	96x96x12	96x96x12	93x93x13	90x90x14	86x86x15	84x84x16	81x81x17	78x78x18	76x76x19	74x74x20	72x72x21	70x70x23	68x68x24	66x66x25	65x65x26	63x63x28	62x62x29	60x60x30	59x59x32	58x58x33	57x57x34	56x56x36	54x54x37	53x53x39	52x52x40	51x51x42
49	99x99x12	99x99x12	99x99x12	99x99x12	99x99x12	97x97x13	93x93x14	90x90x15	87x87x16	84x84x17	81x81x18	79x79x19	77x77x20	75x75x21	73x73x22	71x71x24	69x69x25	67x67x26	66x66x27	64x64x29	63x63x30	61x61x31	60x60x33	59x59x34	58x58x35	57x57x37	55x55x38	54x54x40	53x53x41
50	102x102x12	102x102x12	102x102x12	102x102x12	102x102x12	100x100x12	96x96x13	93x93x14	90x90x15	87x87x16	84x84x18	82x82x19	80x80x20	77x77x21	75x75x22	73x73x23	71x71x24	70x70x26	68x68x27	67x67x28	65x65x30	64x64x31	62x62x32	61x61x34	60x60x35	59x59x36	57x57x38	56x56x39	55x55x41
51	105x105x12	105x105x12	105x105x12	105x105x12	105x105x12	104x104x12	100x100x13	96x96x14	93x93x15	90x90x16	87x87x17	85x85x18	82x82x20	80x80x21	78x78x22	76x76x23	74x74x24	72x72x25	71x71x27	69x69x28	67x67x29	66x66x31	65x65x32	63x63x33	62x62x35	61x61x36	60x60x37	58x58x39	57x57x40
52	108x108x12	108x108x12	108x108x12	108x108x12	108x108x12	107x107x12	103x103x13	100x100x14	97x97x15	93x93x16	91x91x17	88x88x18	85x85x19	83x83x20	81x81x22	79x79x23	77x77x24	75x75x25	73x73x26	71x71x28	70x70x29	68x68x30	67x67x31	65x65x33	64x64x34	63x63x36	62x62x37	61x61x38	59x59x40
53	111x111x12	111x111x12	111x111x12	111x111x12	111x111x12	111x111x12	107x107x13	103x103x14	100x100x15	97x97x16	94x94x17	91x91x18	88x88x19	86x86x20	84x84x21	81x81x22	79x79x24	77x77x25	76x76x26	74x74x27	72x72x29	71x71x30	69x69x31	68x68x32	66x66x34	65x65x35	64x64x37	63x63x38	62x62x39
54	115x115x12	115x115x12	115x115x12	115x115x12	115x115x12	115x115x12	111x111x13	107x107x14	103x103x15	100x100x16	97x97x17	94x94x18	91x91x19	89x89x20	86x86x21	84x84x22	82x82x23	80x80x25	78x78x26	76x76x27	75x75x28	73x73x29	72x72x31	70x70x32	69x69x33	67x67x35	66x66x36	65x65x38	64x64x39

*All footings with one dimension larger than 5x than the smallest (e.g. 10x10x50) may require steel reinforcement (rebar)

Instructions for Table 7.11

1 This table is used to reduce (or increase) footing size for wind conditions not listed in this report
2 Use the tables in Sections 2.0 and 5.0 to determine UPLIFT footing size.
3 If your actual wind condition (mph and Exposure) is different from the table in Sections 2.0 or 5.0 then locate the wind condition (from Section 2.0 or 5.0) and footing size ("d')
4 Then locate your actual wind condition and use the footing size in the same column as you found in #3.

Example: In Section 5.0 your UPLIFT footing for 115mph Exp C is d=30"
Your actual condition is 100 mph Exposure B.
The actual UPLIFT footing size is d=24"
30"x30"x30" = 2.5'x2.5'x2.5' = 15.6 cubic feet
24x24"x24" =2'x2'x2' = 8 cubic feet
Almost a 50% reduction

Instructions for using Table 7.12

1 This table allows you to change the shape of the footing and use the smallest volume possible.
2 From Tables in Section 2.0 or 5.0 find the UPLIFT and CONSTRAINED footing sizes ("d")
Other tables may be used (Like 7.10 or 7.11) to find the UPLIFT or CONSTRAINED footing
3 Cross index the UPLIFT and the CONSTRAINED footing sizes for the new shape.

Example 1:
A d=20" UPLIFT footing and a d=40" CONSTRAINED footing are required.
Cross index both and an 11"x11"x61" is required
A 40"x40"x40" footing = 37 cu ft
An 11"x11"x61" = 4.3 cu ft
A 89% reduction

Example 2:
A d=40" UPLIFT footing and a d=20" CONSTRAINED footing are required.
Cross index both and an 70"x70"x13" is required
No volume is saved when UPLIFT footing is larger than CONSTRAINED footing but depth will be reduced

Misc4b-2021

Registered Professional Engineer (Civil) CERTIFICATE NO. 39702 CARL PUTNAM Date Signed ARIZONA, U.S.A. Expires 09/30/2024

JAN 20 2023

7.0 Requirements for Surface Mounted Posts on Concrete Slabs or Footings for Single Span Attached Lattice Structures

REQUIRED NUMBER OF POSTS FOR SINGLE SPAN LATTICE UNITS WITH SURFACE MOUNTED POSTS ON CONCRETE SLABS OR FOOTINGS

Table L1a: Use this table for Moment Frame A = 367 lbf*ft

Wind Speed	Required Number of Posts	Post Height (ft) 8'	9'	10'	11'	12'	8'	9'	10'	11'	12'
		Wind Exposure B					Wind Exposure C				
		MAXIMUM TRIBUTARY WIDTH ON HEADER ALLOWED									
95 mph	2 or 3	8'	6.5'	5'	4'	2.5'	5'	3.5'	2.5'	1.5'	0.5'
	4	13'	11'	9'	7.5'	6'	8.5'	7'	5.5'	4.5'	3'
	5	18.5'	15.5'	13.5'	11.5'	9.5'	12.5'	10.5'	8.5'	7'	5.5'
	6	23.5'	20'	17.5'	15'	13'	16'	13.5'	11.5'	9.5'	8'
	7	24'	24'	21.5'	19'	16.5'	20'	17'	14.5'	12.5'	10.5'
100 mph	2 or 3	7'	5.5'	4'	3'	2'	4'	3'	2'	1'	0.5'
	4	11.5'	9.5'	8'	6.5'	5'	7.5'	6'	4.5'	3.5'	2.5'
	5	16.5'	14'	11.5'	10'	8.5'	11'	9'	7.5'	6'	4.5'
	6	21'	18'	15.5'	13'	11.5'	14.5'	12'	10'	8.5'	7'
	7	24'	22'	19'	16.5'	14.5'	17.5'	15'	12.5'	11'	9'
105 mph	2 or 3	6'	4.5'	3.5'	2.5'	1.5'	3.5'	2.5'	1.5'	0.5'	0'
	4	10.5'	8.5'	7'	5.5'	4.5'	6.5'	5'	4'	3'	2'
	5	14.5'	12'	10'	8.5'	7'	9.5'	8'	6.5'	5'	4'
	6	19'	16'	13.5'	11.5'	10'	13'	10.5'	9'	7'	6'
	7	23'	20'	17'	15'	13'	16'	13.5'	11'	9.5'	8'
110 mph	2 or 3	5'	4'	3'	2'	1'	3'	2'	1'	0'	0'
	4	9'	7.5'	6'	4.5'	3.5'	6'	4.5'	3.5'	2'	1.5'
	5	13'	11'	9'	7.5'	6'	8.5'	7'	5.5'	4.5'	3'
	6	17'	14.5'	12'	10.5'	8.5'	11.5'	9.5'	7.5'	6.5'	5'
	7	21'	18'	15.5'	13'	11.5'	14'	12'	10'	8.5'	7'
115 mph	2 or 3	4.5'	3.5'	2.5'	1.5'	0.5'	2.5'	1.5'	0.5'	0'	0'
	4	8'	6.5'	5'	4'	3'	5'	4'	2.5'	1.5'	1'
	5	11.5'	9.5'	8'	6.5'	5'	7.5'	6'	4.5'	3.5'	2.5'
	6	15.5'	13'	11'	9'	7.5'	10'	8.5'	7'	5.5'	4'
	7	19'	16'	13.5'	11.5'	10'	13'	10.5'	9'	7.5'	6'
120 mph	2 or 3	4'	3'	2'	1'	0'	2'	1'	0.5'	0'	0'
	4	7.5'	5.5'	4.5'	3.5'	2.5'	4.5'	3.5'	2'	1.5'	0.5'
	5	10.5'	8.5'	7'	5.5'	4.5'	7'	5.5'	4'	3'	2'
	6	14'	11.5'	9.5'	8'	6.5'	9'	7.5'	6'	4.5'	3.5'
	7	17'	14.5'	12.5'	10.5'	9'	11.5'	9.5'	8'	6.5'	5'
130 mph	2 or 3	3'	2'	1'	0'	0'	1.5'	0.5'	0'	0'	0'
	4	6'	4.5'	3.5'	2.5'	1.5'	3.5'	2.5'	1.5'	0.5'	0'
	5	8.5'	7'	5.5'	4.5'	3'	5.5'	4'	3'	2'	1'
	6	11.5'	9.5'	7.5'	6.5'	5'	7.5'	6'	4.5'	3.5'	2.5'
	7	14'	12'	10'	8.5'	7'	9.5'	7.5'	6'	5'	3.5'
140 mph	2 or 3	2'	1.5'	0.5'	0'	0'	1'	0'	0'	0'	0'
	4	4.5'	3.5'	2.5'	1.5'	0.5'	2.5'	1.5'	0.5'	0'	0'
	5	7'	5.5'	4.5'	3'	2'	4.5'	3'	2'	1'	0.5'
	6	9.5'	7.5'	6'	5'	4'	6'	4.5'	3.5'	2.5'	1.5'
	7	12'	10'	8'	6.5'	5.5'	8'	6'	5'	3.5'	2.5'

Table L1b: Use this table for Moment Frame B = 489 lbf*ft

Wind Speed	Required Number of Posts	Post Height (ft) 8'	9'	10'	11'	12'	8'	9'	10'	11'	12'
		Wind Exposure B					Wind Exposure C				
		MAXIMUM TRIBUTARY WIDTH ON HEADER ALLOWED									
95 mph	2 or 3	11.5'	9.5'	7.5'	6.5'	5'	7.5'	6'	4.5'	3.5'	2.5'
	4	18.5'	15.5'	13.5'	11.5'	9.5'	12.5'	10.5'	8.5'	7'	5.5'
	5	24'	22'	19'	16.5'	14'	17.5'	14.5'	12.5'	10.5'	9'
	6	24'	24'	24'	21.5'	19'	22.5'	19'	16.5'	14'	12'
	7	24'	24'	24'	24'	23.5'	24'	23.5'	20.5'	18'	15.5'
100 mph	2 or 3	10'	8'	6.5'	5.5'	4'	6.5'	5'	4'	2.5'	1.5'
	4	16.5'	14'	11.5'	10'	8.5'	11'	9'	7.5'	6'	4.5'
	5	22.5'	19.5'	16.5'	14.5'	12.5'	15.5'	13'	11'	9'	7.5'
	6	24'	24'	21.5'	19'	16.5'	20'	17'	14.5'	12.5'	10.5'
	7	24'	24'	24'	23.5'	20.5'	24'	21'	18'	15.5'	13.5'
105 mph	2 or 3	9'	7'	5.5'	4.5'	3.5'	5.5'	4'	3'	2'	1'
	4	14.5'	12'	10'	8.5'	7'	9.5'	8'	6.5'	5'	4'
	5	20.5'	17.5'	15'	12.5'	11'	14'	11.5'	9.5'	8'	6.5'
	6	24'	22.5'	19.5'	17'	14.5'	18'	15'	13'	11'	9.5'
	7	24'	24'	24'	21'	18.5'	22'	18.5'	16'	14'	12'
110 mph	2 or 3	8'	6'	5'	3.5'	2.5'	5'	3.5'	2.5'	1.5'	0.5'
	4	13'	11'	9'	7.5'	6'	8.5'	7'	5.5'	4.5'	3'
	5	18.5'	15.5'	13'	11'	9.5'	12.5'	10'	8.5'	7'	5.5'
	6	23.5'	20'	17.5'	15'	13'	16'	13.5'	11.5'	9.5'	8'
	7	24'	24'	21.5'	18.5'	16.5'	20'	17'	14.5'	12.5'	10.5'
115 mph	2 or 3	7'	5.5'	4'	3'	2'	4'	3'	2'	1'	0.5'
	4	11.5'	9.5'	8'	6.5'	5'	7.5'	6'	4.5'	3.5'	2.5'
	5	16.5'	14'	12'	10'	8.5'	11'	9'	7.5'	6'	5'
	6	21.5'	18'	15.5'	13.5'	11.5'	14.5'	12'	10'	8.5'	7'
	7	24'	22.5'	19.5'	17'	14.5'	18'	15'	13'	11'	9.5'
120 mph	2 or 3	6'	5'	3.5'	2.5'	1.5'	3.5'	2.5'	1.5'	0.5'	0'
	4	10.5'	8.5'	7'	5.5'	4.5'	7'	5.5'	4'	3'	2'
	5	15'	12.5'	10.5'	9'	7.5'	10'	8'	6.5'	5'	4'
	6	19.5'	16.5'	14'	12'	10'	13'	11'	9'	7.5'	6'
	7	23.5'	20.5'	17.5'	15'	13'	16'	13.5'	11.5'	9.5'	8'
130 mph	2 or 3	5'	3.5'	2.5'	1.5'	0.5'	2.5'	1.5'	1'	0'	0'
	4	8.5'	7'	5.5'	4.5'	3'	5.5'	4'	3'	2'	1'
	5	12.5'	10'	8.5'	7'	5.5'	8'	6.5'	5'	4'	3'
	6	16'	13.5'	11.5'	9.5'	8'	11'	9'	7'	6'	4.5'
	7	20'	17'	14.5'	12.5'	10.5'	13.5'	11'	9.5'	7.5'	6.5'
140 mph	2 or 3	4'	2.5'	1.5'	1'	0'	2'	1'	0.5'	0'	0'
	4	7'	5.5'	4.5'	3'	2'	4.5'	3'	2'	1'	0.5'
	5	10.5'	8.5'	7'	5.5'	4.5'	6.5'	5'	4'	3'	2'
	6	13.5'	11.5'	9.5'	8'	6.5'	9'	7'	5.5'	4.5'	3.5'
	7	16.5'	14'	12'	10'	8.5'	11'	9'	7.5'	6'	5'

Seismic Size Requirements

Table L2a
Moment Frame A

Ss	Size Allowed (cubic feet)	
20%	1575	
30%	1050	
40%	852	***
50%	720	**
60%	600	*
70%	514	
80%	525	
90%	467	
100%	420	
110%	382	
120%	350	
130%	323	
140%	300	
150%	280	

Table L2b
Moment Frame B

Ss	Size Allowed (cubic feet)	
20%	2099	
30%	1399	
40%	1135	
50%	960	***
60%	800	
70%	685	
80%	700	**
90%	622	
100%	560	*
110%	509	
120%	466	
130%	431	
140%	400	
150%	373	

Directions for using Seismic Table L2a, L2b, L2c or L2d****

1. Determine Tributary width on header
2. Determine width of structure
3. Determine height of structure (from ground to top of rafter)
4. Determine number of posts structure has
5. Determine Ss for your area (contact your local building department)****
6. Choose Table L2a-d based on the Moment Frame
7. Determine the maximum size allowed on the chart
8. Multiply #1, #2 and #3 and divide by #4*****
9. If #8 is lower than #7 the structure is OK for seismic
10. If the Ss is over 150% but less than 215% use 150%

*no check needed for Patio Covers attached to slab under these conditions
**no check needed for Patio Covers that are 10' tall attached to slab under these conditions
***no check needed for Patio Covers that are 8' tall attached to slab under these conditions
****Ss is the Maximum Considered Earthquake Ground Motion (0.2 sec) mapped on Figure 1613.2.1(1) in the 2021 IBC
***** Alternatively, divide by these numbers
For 2 post Structures divide by 3
For 3 post Structures divide by 3
For 4 post Structures divide by 4.5
For 5 post Structures divide by 6
For all others add 1.5 to number of posts
****** Not for use in areas with flat roof snow loads exceeds 30 psf.

Moment Frame A: Detail L26, 4 screws, A=5", B= 7", sideplates = 0.024"
Moment Frame A: Detail L12, 4 screws per header, A=2", B= 5", DBL HEADER
Moment Frame A: Detail L8, 6 screws, A=2", B= 6", SINGLE STEEL C
Moment Frame B: Detail L26, 4 screws, A=5", B= 7", sideplates = 0.032"
Moment Frame B: Detail L26, 6 screws, A=5", B= 7", sideplates = 0.024"
Moment Frame C: Detail L26, 8 screws, A=4", B= 6", sideplates = 0.024"
Moment Frame C: Detail L12, 4 screws per header, A=2", B= 7", DBL HEADER
Moment Frame C: Detail L12, 6 screws per header, A=2", B= 5", DBL HEADER
Moment Frame C: Detail L8, 4 BOLTS, A=2", B= 6", SINGLE STEEL C
Moment Frame C: Detail L8, 10 screws, A=2", B= 6", SINGLE STEEL C
Moment Frame D: Detail L8, 4 BOLTS, A=2", B= 5", DBL STEEL C
Moment Frame D: Detail L8, 6 screws per header, A=2", B= 6", DBL STEEL C

Tables L1 and L2 need to be checked for surface mount concrete attachment

Amerimax Exterior Home Products
28921 US Hwy 74
Romoland, CA 92585

Carl Putnam, P. E.
3441 Ivylink Place
Lynchburg, VA 24503

Registered Professional Engineer (Civil)
CERTIFICATE NO. 39702
CARL PUTNAM
Date Signed
ARIZONA U.S.A.
Expires 09/30/2024

JAN 20 2023

Misc5a-2021

7.0 Requirements for Surface Mounted Posts on Concrete Slabs or Footings for Single Span Attached Lattice Structures

REQUIRED NUMBER OF POSTS FOR SINGLE SPAN LATTICE UNITS WITH SURFACE MOUNTED POSTS ON CONCRETE SLABS OR FOOTINGS

Table L1c: Use this table for Moment Frame C = 535 lbf*ft

Wind Speed	Required Number of Posts	Post Height (ft) 8'	9'	10'	11'	12'	8'	9'	10'	11'	12'
		Wind Exposure B					Wind Exposure C				
		MAXIMUM TRIBUTARY WIDTH ON HEADER ALLOWED									
95 mph	2 or 3	12.5'	10.5'	9'	7'	6'	8.5'	6.5'	5.5'	4'	3'
	4	20.5'	17.5'	15'	12.5'	11'	14'	11.5'	9.5'	8'	6.5'
	5	24'	24'	21'	18'	16'	19.5'	16.5'	14'	12'	10'
	6	24'	24'	24'	23.5'	21'	24'	21'	18.5'	16'	14'
	7	24'	24'	24'	24'	24'	24'	24'	22.5'	20'	17.5'
100 mph	2 or 3	11'	9'	7.5'	6'	5'	7.5'	5.5'	4.5'	3.5'	2.5'
	4	18'	15.5'	13'	11'	9.5'	12'	10'	8.5'	7'	5.5'
	5	24'	21.5'	18.5'	16'	14'	17'	14.5'	12.5'	10.5'	9'
	6	24'	24'	24'	21'	18.5'	22'	19'	16'	14'	12'
	7	24'	24'	24'	24'	23'	24'	23'	20'	17.5'	15.5'
105 mph	2 or 3	10'	8'	6.5'	5'	4'	6.5'	5'	3.5'	2.5'	1.5'
	4	16'	13.5'	11.5'	9.5'	8'	11'	9'	7.5'	6'	4.5'
	5	22.5'	19'	16.5'	14'	12.5'	15.5'	13'	11'	9'	7.5'
	6	24'	24'	21.5'	18.5'	16.5'	20'	17'	14.5'	12.5'	10.5'
	7	24'	24'	24'	23'	20.5'	24'	21'	18'	15.5'	13.5'
110 mph	2 or 3	9'	7'	5.5'	4.5'	3.5'	5.5'	4'	3'	2'	1'
	4	14.5'	12'	10'	8.5'	7'	9.5'	8'	6.5'	5'	4'
	5	20'	17'	14.5'	12.5'	11'	13.5'	11.5'	9.5'	8'	6.5'
	6	24'	22.5'	19.5'	16.5'	14.5'	18'	15'	13'	11'	9'
	7	24'	24'	24'	21'	18.5'	22'	18.5'	16'	14'	12'
115 mph	2 or 3	8'	6.5'	5'	3.5'	2.5'	5'	3.5'	2.5'	1.5'	0.5'
	4	13'	11'	9'	7.5'	6'	8.5'	7'	5.5'	4.5'	3'
	5	18.5'	15.5'	13'	11'	9.5'	12.5'	10'	8.5'	7'	5.5'
	6	23.5'	20'	17.5'	15'	13'	16'	13.5'	11.5'	9.5'	8'
	7	24'	24'	21.5'	18.5'	16.5'	20'	17'	14.5'	12.5'	10.5'
120 mph	2 or 3	7'	5.5'	4'	3'	2'	4.5'	3'	2'	1'	0.5'
	4	12'	9.5'	8'	6.5'	5.5'	7.5'	6'	5'	3.5'	2.5'
	5	16.5'	14'	12'	10'	8.5'	11'	9'	7.5'	6'	5'
	6	21.5'	18'	15.5'	13.5'	11.5'	14.5'	12'	10'	8.5'	7'
	7	24'	22.5'	19.5'	17'	14.5'	18'	15'	13'	11'	9.5'
130 mph	2 or 3	5.5'	4'	3'	2'	1'	3'	2'	1'	0.5'	0'
	4	9.5'	8'	6.5'	5'	4'	6'	5'	3.5'	2.5'	1.5'
	5	14'	11.5'	9.5'	8'	6.5'	9'	7.5'	6'	4.5'	3.5'
	6	18'	15'	13'	11'	9'	12'	10'	8'	6.5'	5.5'
	7	22'	18.5'	16'	14'	12'	15'	12.5'	10.5'	9'	7.5'
140 mph	2 or 3	4.5'	3'	2'	1.5'	0.5'	2.5'	1.5'	0.5'	0'	0'
	4	8'	6.5'	5'	4'	3'	5'	3.5'	2.5'	1.5'	1'
	5	11.5'	9.5'	8'	6.5'	5'	7.5'	6'	4.5'	3.5'	2.5'
	6	15'	12.5'	10.5'	9'	7.5'	10'	8'	6.5'	5.5'	4'
	7	18.5'	15.5'	13.5'	11.5'	9.5'	12.5'	10.5'	8.5'	7'	5.5'

Table L1d: Use this table for Moment Frame D = 829 lbf*ft

Wind Speed	Required Number of Posts	Post Height (ft) 8'	9'	10'	11'	12'	8'	9'	10'	11'	12'
		Wind Exposure B					Wind Exposure C				
		MAXIMUM TRIBUTARY WIDTH ON HEADER ALLOWED									
95 mph	2 or 3	21'	18'	15.5'	13.5'	11.5'	14.5'	12'	10'	8.5'	7'
	4	24'	24'	24'	22'	19'	23'	19.5'	17'	14.5'	12.5'
	5	24'	24'	24'	24'	24'	24'	24'	23.5'	20.5'	18'
	6	24'	24'	24'	24'	24'	24'	24'	24'	24'	23.5'
	7	24'	24'	24'	24'	24'	24'	24'	24'	24'	24'
100 mph	2 or 3	19'	16'	13.5'	11.5'	10'	12.5'	10.5'	8.5'	7'	6'
	4	24'	24'	22'	19.5'	17'	20.5'	17.5'	15'	12.5'	11'
	5	24'	24'	24'	24'	24'	24'	24'	21'	18'	16'
	6	24'	24'	24'	24'	24'	24'	24'	24'	23.5'	21'
	7	24'	24'	24'	24'	24'	24'	24'	24'	24'	24'
105 mph	2 or 3	17'	14'	12'	10'	8.5'	11.5'	9.5'	7.5'	6'	5'
	4	24'	23'	19.5'	17'	15'	18'	15.5'	13'	11'	9.5'
	5	24'	24'	24'	24'	21.5'	24'	21.5'	18.5'	16'	14'
	6	24'	24'	24'	24'	24'	24'	24'	24'	21'	18.5'
	7	24'	24'	24'	24'	24'	24'	24'	24'	24'	23'
110 mph	2 or 3	15'	12.5'	10.5'	9'	7.5'	10'	8'	6.5'	5.5'	4'
	4	24'	20.5'	17.5'	15.5'	13.5'	16.5'	14'	11.5'	10'	8.5'
	5	24'	24'	24'	21.5'	19'	22.5'	19.5'	16.5'	14.5'	12.5'
	6	24'	24'	24'	24'	24'	24'	24'	21.5'	19'	16.5'
	7	24'	24'	24'	24'	24'	24'	24'	24'	23.5'	20.5'
115 mph	2 or 3	13.5'	11.5'	9.5'	8'	6.5'	9'	7'	6'	4.5'	3.5'
	4	21.5'	18.5'	16'	13.5'	12'	15'	12.5'	10.5'	8.5'	7'
	5	24'	24'	22.5'	19.5'	17'	20.5'	17.5'	15'	13'	11'
	6	24'	24'	24'	24'	22.5'	24'	22.5'	19.5'	17'	15'
	7	24'	24'	24'	24'	24'	24'	24'	24'	21'	18.5'
120 mph	2 or 3	12.5'	10'	8.5'	7'	5.5'	8'	6.5'	5'	4'	3'
	4	19.5'	16.5'	14.5'	12'	10.5'	13.5'	11'	9'	7.5'	6.5'
	5	24'	23.5'	20'	17.5'	15.5'	18.5'	16'	13.5'	11.5'	10'
	6	24'	24'	24'	23'	20'	24'	20.5'	17.5'	15.5'	13.5'
	7	24'	24'	24'	24'	24'	24'	24'	22'	19'	16.5'
130 mph	2 or 3	10'	8'	6.5'	5.5'	4'	6.5'	5'	4'	2.5'	2'
	4	16.5'	14'	11.5'	10'	8.5'	11'	9'	7.5'	6'	4.5'
	5	22.5'	19.5'	16.5'	14.5'	12.5'	15.5'	13'	11'	9'	7.5'
	6	24'	24'	21.5'	19'	16.5'	20'	17'	14.5'	12.5'	10.5'
	7	24'	24'	24'	23.5'	21'	24'	21'	18'	15.5'	13.5'
140 mph	2 or 3	8.5'	6.5'	5.5'	4'	3'	5'	4'	3'	2'	1'
	4	14'	11.5'	9.5'	8'	6.5'	9'	7.5'	6'	4.5'	3.5'
	5	19.5'	16.5'	14'	12'	10'	13'	11'	9'	7.5'	6'
	6	24'	21'	18.5'	16'	14'	17'	14.5'	12'	10'	8.5'
	7	24'	24'	22.5'	20'	17.5'	21'	17.5'	15'	13'	11'

Seismic Size Requirements

Table L2c
Moment Frame C

Ss	Size Allowed (cubic feet)	
20%	2297	
30%	1531	
40%	1241	
50%	1050	
60%	875	***
70%	750	
80%	766	**
90%	680	
100%	612	
110%	557	*
120%	510	
130%	471	
140%	437	
150%	408	

Table L2d
Moment Frame D

Ss	Size Allowed (cubic feet)	
20%	3559	
30%	2372	
40%	1924	
50%	1627	
60%	1356	
70%	1162	
80%	1186	
90%	1054	
100%	949	
110%	863	***
120%	791	
130%	730	**
140%	678	
150%	633	*

Directions for using Seismic Table L2a, L2b, L2c or L2d****

1. Determine Tributary width on header
2. Determine width of structure
3. Determine height of structure (from ground to top of rafter)
4. Determine number of posts structure has
5. Determine Ss for your area (contact your local building department)****
6. Choose Table L2a-d based on the Moment Frame
7. Determine the maximum size allowed on the chart
8. Multiply #1, #2 and #3 and divide by #4*****
9. If #8 is lower than #7 the structure is OK for seismic
10. If the Ss is over 150% but less than 215% use 150%

*no check needed for Patio Covers attached to slab under these conditions
**no check needed for Patio Covers that are 10' tall attached to slab under these conditions
***no check needed for Patio Covers that are 8' tall attached to slab under these conditions
****Ss is the Maximum Considered Earthquake Ground Motion (0.2 sec) mapped on Figure 1613.2.1(1) in the 2021 IBC
***** Alternatively, divide by these numbers
For 2 post Structures divide by 3
For 3 post Structures divide by 3
For 4 post Structures divide by 4.5
For 5 post Structures divide by 6
For all others add 1.5 to number of posts
****** Not for use in areas with flat roof snow loads exceeds 30 psf.

Moment Frame A: Detail L26, 4 screws, A=5", B= 7", sideplates = 0.024"
Moment Frame A: Detail L12, 4 screws per header, A=2", B= 5", DBL HEADER
Moment Frame A: Detail L8, 6 screws, A=2", B= 6", SINGLE STEEL C
Moment Frame B: Detail L26, 4 screws, A=5", B= 7", sideplates = 0.032"
Moment Frame B: Detail L26, 6 screws, A=5", B= 7", sideplates = 0.024"
Moment Frame C: Detail L26, 8 screws, A=4", B= 6", sideplates = 0.024"
Moment Frame C: Detail L12, 4 screws per header, A=2", B= 7", DBL HEADER
Moment Frame C: Detail L12, 6 screws per header, A=2", B= 5", DBL HEADER
Moment Frame C: Detail L8, 4 BOLTS, A=2", B= 6", SINGLE STEEL C
Moment Frame C: Detail L8, 10 screws, A=2", B= 6", SINGLE STEEL C
Moment Frame D: Detail L8, 4 BOLTS, A=2", B= 5", DBL STEEL C
Moment Frame D: Detail L8, 6 screws per header, A=2", B= 6", DBL STEEL C

Tables L1 and L2 need to be checked for surface mount concrete attachment

Amerimax Exterior Home Products
28921 US Hwy 74
Romoland, CA 92585

Carl Putnam, P. E.
3441 Ivylink Place
Lynchburg, VA 24503

Registered Professional Engineer (Civil)
CERTIFICATE NO. 39702
CARL PUTNAM
Date Signed
ARIZONA U.S.A.
Expires 09/30/2024

JAN 20 2023
Misc5b-2021

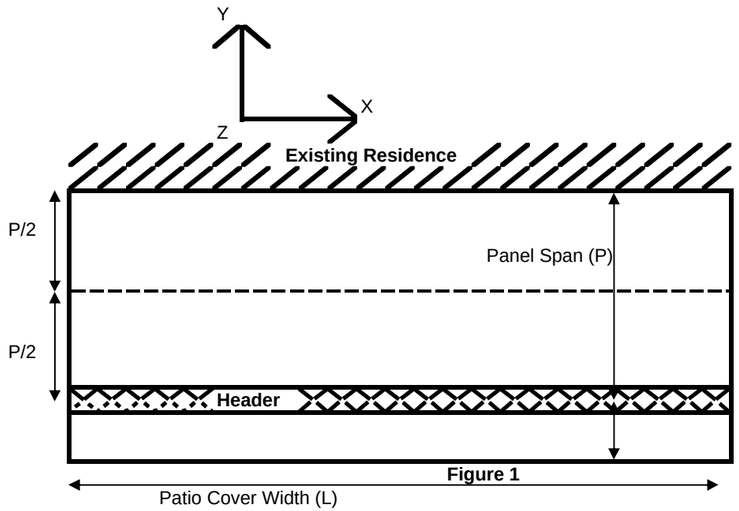

Figure 1

The purpose of this information is to define the loads on the existing structure resulting from the patio cover. In addition to addressing the load at the wall supporting the rafters or solid panels, address the stud(s) that may support a header connection.

Determine Snow Loads on Existing Structure

1 **Determine Roof Snow/Live Load, S. See General Note 3.**
2 **Dead Load = 1 psf**
3 **Add Dead and Live/Snow Loads, mulitply by half of Panel Span**
Wall Load = (D + S) P /2
4 **Result is wall load in pounds per linear foot.**

Determine Wind Loads on Existing Structure

1 **Determine Wind Load, W+ or W-. See Table 1**
2 **Add 1 psf to down load, subtract 0.6 psf from up load**
3 **Mulitply W+ or W- by half of Panel Span**
Wall Load = W P /2
4 **Result is wall load in pounds per linear foot.**
5 **Maximum Shear Load in X direction is 216 lbf (170 mph Exposure C, 10'-2" Panel Span)**
Max load in Y direction (towards house) is 66 plf (170 mph Exp C, 8" tall beam)
Max load in Y direction due to force couple resisting lateral is 109 plf
(170 mph Exp C, Projection = Width)

Determine Seismic Loads on Existing Structure (Excludes Roof Snow Load over 30 psf)

1 **Vertical Loads and Horizontal Loads = maximum of 1 psf**

Combination Loads based on Equation 16-11

1 **Determine Combination Load, C. See Table 2**
3 **Mulitply C by half of Panel Span**
Wall Load = C P /2
4 **Result is wall load in pounds per linear foot.**

Kz	0.7	0.98	height factor, Exposure B and C
Kzt	1	Topographic factor	
Kd	0.85	Wind Directionality factor	
I	1	Importance Factor	
GCp net (up)	1.28	Net Pressure Coefficient uplift	
GCP net(down)	0.78	Net Pressure Coefficent down	
Dead	1	psf	

Wind Speed (mph)	Exposure	qh (psf)	Design Wind Down Load (psf) 0.6xW+	Design Wind Up Load (psf) 0.6xW-
95	**B**	13.7	9.6	10.6
100	**B**	15.2	9.6	11.7
105	**B**	16.8	9.6	12.9
110	**B**	18.4	9.6	14.2
115	**B**	20.1	9.6	15.5
120	**B**	21.9	10.3	16.8
130	**B**	25.7	12.0	19.8
140	**B**	29.9	14.0	22.9
150	**B**	34.3	16.0	26.3
160	**B**	39.0	18.2	29.9
170	**B**	44.0	20.6	33.8
95	**C**	19.2	9.6	14.8
100	**C**	21.3	10.0	16.4
105	**C**	23.5	11.0	18.1
110	**C**	25.8	12.1	19.8
115	**C**	28.2	13.2	21.7
120	**C**	30.7	14.4	23.6
130	**C**	36.0	16.9	27.7
140	**C**	41.8	19.6	32.1
150	**C**	48.0	22.5	36.8
160	**C**	54.6	25.5	41.9
170	**C**	61.6	28.8	47.3

TABLE 1

TABLE 2

		Combination Loads: Snow + Wind +Dead Loads								
Wind		Live Loads (psf)		Ground Snow Loads (psf)						
Speed (mph)	Exposure	10	20	15	25	30	35.7	42	50	60
Roof Live /Snow Loads		10	20	15	21	25.2	30.0	35.3	42	50.4
95	**B**	15.7	23.2	19.5	24.0	27.1	30.7	34.7	39.7	46.0
100	**B**	15.7	23.2	19.5	24.0	27.1	30.7	34.7	39.7	46.0
105	**B**	15.7	23.2	19.5	24.0	27.1	30.7	34.7	39.7	46.0
110	**B**	15.7	23.2	19.5	24.0	27.1	30.7	34.7	39.7	46.0
115	**B**	15.7	23.2	19.5	24.0	27.1	30.7	34.7	39.7	46.0
120	**B**	16.2	23.7	19.9	24.4	27.6	31.2	35.2	40.2	46.5
130	**B**	17.5	25.0	21.3	25.8	28.9	32.5	36.5	41.5	47.8
140	**B**	19.0	26.5	22.7	27.2	30.4	34.0	37.9	43.0	49.3
150	**B**	20.5	28.0	24.3	28.8	31.9	35.5	39.5	44.5	50.8
160	**B**	22.2	29.7	25.9	30.4	33.6	37.2	41.1	46.2	52.5
170	**B**	24.0	31.5	27.7	32.2	35.4	38.9	42.9	48.0	54.3
95	**C**	15.7	23.2	19.5	24.0	27.1	30.7	34.7	39.7	46.0
100	**C**	16.0	23.5	19.7	24.2	27.4	31.0	34.9	40.0	46.3
105	**C**	16.8	24.3	20.5	25.0	28.2	31.7	35.7	40.8	47.1
110	**C**	17.6	25.1	21.3	25.8	29.0	32.5	36.5	41.6	47.9
115	**C**	18.4	25.9	22.1	26.6	29.8	33.4	37.4	42.4	48.7
120	**C**	19.3	26.8	23.0	27.5	30.7	34.3	38.2	43.3	49.6
130	**C**	21.1	28.6	24.9	29.4	32.5	36.1	40.1	45.1	51.4
140	**C**	23.2	30.7	26.9	31.4	34.6	38.2	42.1	47.2	53.5
150	**C**	25.3	32.8	29.1	33.6	36.7	40.3	44.3	49.3	55.6
160	**C**	27.7	35.2	31.4	35.9	39.1	42.7	46.6	51.7	58.0
170	**C**	30.1	37.6	33.9	38.4	41.5	45.1	49.1	54.1	60.4

Amerimax Exterior Home Products
28921 US Hwy 74
Romoland, CA 92585

Carl Putnam, P. E.
3441 Ivylink Place
Lynchburg, VA 24503
(434) 384-2514
carlputnam@comcast.net

Registered Professional Engineer (Civil)
CERTIFICATE NO.
39702
CARL PUTNAM
Date Signed
ARIZONA U.S.A.
Expires 09/30/2024

JAN 20 2023
Misc6-2021

Amerimax Structural Properties of Beams, Fascia, Panels and Rafters for Use by Design Professionals

Structural Element	I (in^4) top in compression	I (in^4) bottom in compression	ASSUMES FULL LATERAL BRACING: Max Allowable Moment (top in compression (lbf*ft)	ASSUMES FULL LATERAL BRACING: Max Allowable Moment (bottom in compression (lbf*ft)	Max Allowable Shear (lbf)	Material	E (ksi)	Ftu or Fu (ksi)	Fty or Fy (ksi)	Fcy (ksi)
Rafters										
0.024"x2"x6.625" Aluminum Rafter	2.283	same	301	282	166	3004H34	10100	32	25	22
0.032"x2"x6.625" Aluminum Rafter	3.072	same	570	510	398	3004H34	10100	32	25	22
0.040"x2"x6.625" Aluminum Rafter	3.873	same	879	811	784	3004H34	10100	32	25	22
0.042"x3"x8" Aluminum Rafter	7.907	same	1177	1051	747	3004H34	10100	32	25	22
0.024"x3"x3" Aluminum Rafter	0.445	same	113	108	380	3004H34	10100	23	19	17
0.040"x3"x3" Aluminum Rafter	0.754	same	394	348	1539	3004H34	10100	23	19	17
Solid Panels										
0.018"x2.5"x6" Aluminum Panel	0.263	same	141	107	200	3004H36	10100	35	28	25
0.024"x2.5"x6" Aluminum Panel	0.351	same	246	174	475	3004H34	10100	32	25	22
0.032"x2.5"x6" Aluminum Panel	0.467	same	385	278	931	3004H34	10100	32	25	22
0.036"x2.5"x6" Aluminum Panel	0.526	same	439	335	1155	3004H34	10100	32	25	22
0.018"x3.5"x12" Aluminum Panel	0.545	same	289	464	117	3004H36	10100	35	28	25
0.024"x3.5"x12" Aluminum Panel	0.727	same	418	692	277	3004H34	10100	32	25	22
0.032"x3.5"x12" Aluminum Panel	0.969	same	580	922	657	3004H34	10100	32	25	22
0.036"x3.5"x12" Aluminum Panel	1.09	same	666	1037	935	3004H34	10100	32	25	22
0.018"x2.5"x12" Aluminum Panel	0.25	same	137	93	246	3004H36	10100	35	28	25
0.024"x2.5"x12" Aluminum Panel	0.334	same	244	177	584	3004H36	10100	35	28	25
0.032"x2.5"x12" Aluminum Panel	0.445	same	434	314	1384	3004H36	10100	35	28	25
0.036"x2.5"x12" Aluminum Panel	0.501	same	516	374	1970	3004H34	10100	32	25	22
0.018"x2"x6" Aluminum Panel	0.152	same	109	157	284	3004H36	10100	35	28	25
0.024"x2"x6" Aluminum Panel	0.203	same	191	232	516	3004H34	10100	32	25	22
0.032"x2"x6" Aluminum Panel	0.271	same	294	351	820	3004H34	10100	32	25	22
0.040"x2"x6" Aluminum Panel	0.339	same	374	477	1089	3004H34	10100	32	25	22
Aluminum Headers										
0.042"x3"x8" Aluminum Header	7.907	same	1177	1051	747	3004H34	10100	32	25	22
Double 0.042"x3"x8" Aluminum Header	15.814	same	2354	2102	1494	3004H34	10100	32	25	22
Double 0.040"x2"x6.625" Aluminum Header	7.746	same	1758	1622	1568	3004H34	10100	32	25	22
Aluminum Fascia										
California Extruded Fascia	3.09	same	1160	1365	5645	6063T6	10100	30	25	25
Classic Extruded Fascia	6.03	same	3089	3494	14293	6061T6	10100	38	35	35
5.5" Extruded Fascia	3.46	same	1280	1638	3414	6061T6	10100	38	35	35
4"x3" Ibeam	3.62	same	2457	2527	2163	6063T6	10100	30	25	25
7"x4" Ibeam	13.86	same	6439	6439	4133	6061T6	10100	38	35	35
Steel Headers										
0.041"x3"x3" Steel Cloverleaf	0.77	0.77	1028	1028	3138	ASTM A653 Grade 40	29000	55	40	
Double 0.041"x3"x3" Steel Cloverleaf	1.54	1.54	2056	2056	6276	ASTM A653 Grade 40	29000	55	40	
12 Gauge Steel C Beam	13.28	13.28	8549	8549	14019	ASTM A653 Grade 50	29000	65	50	
14 Gauge Steel C Beam	9.04	7.75	4991	4991	4056	ASTM A653 Grade 50	29000	65	50	
16 Gauge Steel C Beam	7.67	5.97	3845	3845	2410	ASTM A653 Grade 50	29000	65	50	
Double 12 Gauge Steel C Beam	26.56	26.56	17098	17098	28038	ASTM A653 Grade 50	29000	65	50	
Double 14 Gauge Steel C Beam	18.08	15.5	9982	9982	8112	ASTM A653 Grade 50	29000	65	50	
Double 16 Gauge Steel C Beam	15.34	11.94	7690	7690	4820	ASTM A653 Grade 50	29000	65	50	

Misc7-2021

Registered Professional Engineer (Civil) CERTIFICATE NO. 39702 CARL PUTNAM Date Signed ARIZONA U.S.A. Expires 09/30/2024

JAN 20 2023

CONSTRAINED FOOTING SIZE d (IN)	REQUIRED SLAB AREA PER POST (SQUARE FEET)			
	CONCRETE SLAB THICKNESS (IN)			
	3.5"	5.5"	7.25"	9.25"
20	26	17	13	10
21	31	20	15	12
22	36	23	17	14
23	41	26	20	16
24	47	30	23	18
25	54	34	26	20
26	61	39	30	23
27	70	44	34	26
28	78	50	38	30
29	88	56	42	33
30	98	63	48	37
31	110	70	53	41
32	122	78	59	46
33	135	86	65	51
34	149	95	72	56
35	164	104	79	62
36	180	115	87	68
37	198	126	95	75
38	216	137	104	82
39	236	150	114	89
40	257	163	124	97
41	279	178	135	106
42	303	193	146	114
43	328	208	158	124
44	354	225	171	134
45	382	243	185	145
46	412	262	199	156
47	443	282	214	168
48	476	303	230	180
49	511	325	247	193
50	547	348	264	207

Amerimax Exterior Home Products
28921 US Hwy 74
Romoland, CA

Carl Putnam, P. E.
3441 Ivylink Place
Lynchburg, VA 24503

Misc8-2021

Registered Professional Engineer (Civil)
CERTIFICATE
CARL PUTNAM
NO. 38702
Date Signed
ARIZONA, U.S.A.
Expires 09/30/2024

JAN 20 2023