A PROJECT FOR:

U.S. PATENT
NO. 9,822,524

SCOPE OF WORK

1. PATIO BRACKET DESIGNS

SHEET INDEX

SHEET NO.	STRUCTURAL DRAWINGS
C1	COVER SHEET
S1	GENERAL NOTES
S1.1	STATE APPROVALS
S2	ALLOWABLE SPAN TABLES
S3	ALLOWABLE SPAN TABLES
S4	RAFTER BRACKETS
S5	RAISED RAFTER BRACKETS
S6	FLUSH RAFTER BRACKETS

PLUMP ENGINEERING INC.
CONSULTING ENGINEERS IN
STRUCTURAL ENGINEERING
914 E. KATELLA AVENUE
ANAHEIM, CALIFORNIA 92805
(714) 385-1835, FAX (714) 385-1834

This design and drawing are for use on specific site indicated and is the exclusive property of PLUMP ENGINEERING INC. and shall not be used, duplicated or altered in part or in whole without written approval of PLUMP ENGINEERING INC.

Copyright 2003. © All rights reserved

COVER SHEET

BEAM LYFT
PO BOX 2898
PASO ROBLES, CA 93447

PATIO BRACKET DESIGN

PROJECT NO: S.150457

REVISIONS

DATE: DATE

CHECKED BY: G. PANEK

SCALE: AS NOTED

SHEET NO:
C1

PLOT DATE:

GENERAL REQUIREMENTS:

1. NO CHANGES ARE TO BE MADE TO THESE PLANS WITHOUT THE KNOWLEDGE AND WRITTEN CONSENT OF THE ENGINEER OR ARCHITECT.
2. ALL DIMENSIONS CONTROLLED BY EXISTING CONDITIONS SHALL BE VERIFIED BY THE CONTRACTOR AT THE SITE.
3. CONSTRUCTIONS AND MATERIALS SHALL COMPLY WITH AND BE INSTALLED IN ACCORDANCE WITH ALL THE REQUIREMENTS OF ALL LEGALLY CONSTITUTED PUBLIC AUTHORITIES HAVING JURISDICTION, INCLUDING ALL COUNTY AND LOCAL ORDINANCES, AND THE SAFETY ORDERS OF THE STATE INDUSTRIAL ACCIDENT COMMISSION, OSHA.
4. GENERAL CONTRACTOR SHALL VISIT THE JOB SITE AND VERIFY ALL GRADES, DIMENSIONS, AND CONDITIONS PRIOR TO BIDDING AND COMMENCING CONSTRUCTION.
5. GENERAL CONTRACTOR SHALL BE RESPONSIBLE FOR THE COORDINATION OF ALL WORK, INCLUDING THAT OF ALL SUB-TRADES.
6. GENERAL CONTRACTOR SHALL NOTIFY ENGINEER AND ARCHITECT IMMEDIATELY OF ANY DISCREPANCIES FOUND WITHIN THE CONTRACT DOCUMENTS.
7. ALL WORK PERFORMED SHALL CONFORM WITH THE REQUIREMENTS OF THE LOCAL BUILDING CODE (LATEST ADOPTED EDITION) OR OTHER APPLICABLE GOVERNING CODES AND BUILDING ORDINANCES.
8. ALL SUB-CONTRACTORS SHALL BE RESPONSIBLE FOR REMOVAL OF ALL DEBRIS ACCUMULATED AS A RESULT OF THEIR OPERATION. ALL SCRAP, DEBRIS, AND OTHER EXCESS MATERIAL SHALL BE REMOVED FROM THE BUILDING SITE.
9. THE OWNER SHALL HAVE THE RIGHT TO MAKE CERTAIN CHANGES IN THE WORK AND THE CONTRACT AMOUNT SHALL BE ADJUSTED ACCORDINGLY. HOWEVER, THE GENERAL CONTRACTOR SHALL NOT PROCEED WITH ANY CHANGES WITHOUT THE WRITTEN APPROVAL OF THE OWNER.
10. ALL MATERIALS SHALL BE FURNISHED AS SHOWN HEREIN UNLESS EQUAL ALTERNATES ARE APPROVED IN WRITING BY THE OWNER.
11. GENERAL CONTRACTOR SHALL BE RESPONSIBLE FOR SHORING AND PROVIDING BRACING DURING CONSTRUCTION AND/OR ERECTION TO SUPPORT ALL LOADS TO WHICH THE STRUCTURE MAY BE SUBJECTED.
12. SEE ARCHITECT'S SPECIFICATIONS FOR ADDITIONAL REQUIREMENTS, IF APPLICABLE.
13. ANY REFERENCE TO THE WORDS APPROVE, APPROVED, OR APPROVAL IN THESE DOCUMENTS SHALL BE HERE DEFINED TO MEAN GENERAL ACCEPTANCE OR REVIEW AND SHALL NOT RELIEVE THE CONTRACTOR AND/OR HIS SUB-CONTRACTORS OF ANY LIABILITY IN FURNISHING THE REQUIRED MATERIALS OR LABOR SPECIFIED.

GENERAL REQUIREMENTS CONT.:

14. THE CONTRACT DRAWINGS AND SPECIFICATIONS REPRESENT THE FINISHED STRUCTURE AND DO NOT INDICATE THE METHOD OF CONSTRUCTION. THE CONTRACTOR SHALL SUPERVISE AND DIRECT THE WORK AND SHALL BE SOLELY RESPONSIBLE FOR CONSTRUCTION MEANS, METHODS, TECHNIQUES, SEQUENCES, AND PROCEDURES, INCLUDING, BUT NOT LIMITED TO BRACING AND SHORING. OBSERVATION VISITS TO THE SITE BY FIELD REPRESENTATIVES OF THE ARCHITECT OR ENGINEER SHALL NOT INCLUDE INSPECTIONS OF THE PROTECTIVE MEASURES OR THE CONSTRUCTION PROCEDURES. ANY SUPPORT SERVICES PERFORMED BY THE ARCHITECT OR ENGINEER DURING THE CONSTRUCTION SHALL BE DISTINGUISHED FROM CONTINUOUS AND DETAILED INSPECTION SERVICES WHICH ARE FURNISHED BY OTHERS. THESE SUPPORT SERVICES PERFORMED BY THE ARCHITECT OR ENGINEER, WHETHER OF MATERIAL OR WORK, AND FOR THE PURPOSE OF ASSISTING IN QUALITY CONTROL AND IN ACHIEVING COMPLIANCE WITH CONTRACT DOCUMENTS, DO NOT GUARANTEE CONTRACTOR'S PERFORMANCE AND SHALL NOT BE CONSTRUED AS SUPERVISION OF CONSTRUCTION.

STRUCTURAL STEEL:

1. ALL STRUCTURAL STEEL SHALL CONFORM TO THE REQUIREMENTS OF ASTM AND SHALL BE FABRICATED ACCORDING TO AISC PRACTICE AND SPECIFICATIONS FOR BUILDING.
2. PLATES & BARS SHALL CONFORM TO ASTM A-36/A36M-05 U.N.O.
3. STRUCTURAL SHAPES SHALL CONFORM TO ASTM A-992/A992-06a.
4. TUBE MEMBERS SHALL CONFORM TO ASTM A-500, GRADE B (Fy=46 KSI) PIPE COLUMNS SHALL CONFORM TO ASTM A-53, GRADE B.
5. WELDING SHALL CONFORM WITH THE LATEST ADDITION OF THE WELDING CODE AWSD1.1-08. USE APPROVED ELECTRODES CONFORMING WITH ASTM A-233. WELDING SHALL BE PERFORMED BY CERTIFIED WELDERS APPROVED BY THE BUILDING DEPARTMENT. ALL FIELD WELDING SHALL BE CONTINUOUSLY INSPECTED BY A REGISTERED DEPUTY INSPECTOR, AT THE EXPENSE OF THE GENERAL CONTRACTOR UNLESS A PRIOR AGREEMENT IS NEGOTIATED WITH THE OWNER.
6. NO HOLES OTHER THAN THOSE SPECIFICALLY DETAILED SHALL BE ALLOWED THRU STRUCTURAL STEEL MEMBERS. NO CUTTING OR BURNING OF STRUCTURAL STEEL WILL BE PERMITTED WITHOUT PRIOR CONSENT OF THE ENGINEER.

PLUMP ENGINEERING INC.
CONSULTING ENGINEERS IN STRUCTURAL ENGINEERING
914 E. KATELLA AVENUE
ANAHEIM, CALIFORNIA 92805
(714) 385-1835, FAX (714) 385-1834

This design and drawing are for use on specific site indicated and is the exclusive property of PLUMP ENGINEERING INC. and shall not be used, duplicated or altered in part, or in whole without written approval of PLUMP ENGINEERING INC.

Copyright 2003, © All rights reserved

GENERAL NOTES

BEAM LYFT

PATIO BRACKET DESIGN

PO BOX 2898
PASO ROBLES, CA 93447

PROJECT NO:	S.150457
REVISIONS	
DATE:	DATE
CHECKED BY:	G. PANEK
SCALE:	AS NOTED

SHEET NO:

S1

PLOT DATE:

STATE APPROVALS:

1/29/19

1/29/19

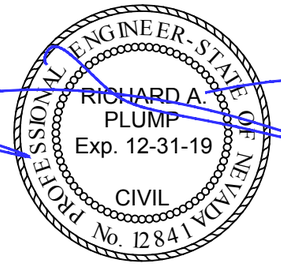

1/29/19

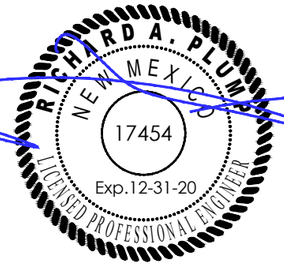

1/29/19

1/29/19

1/29/19

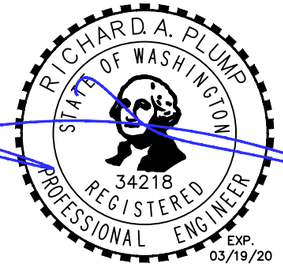

1/29/19

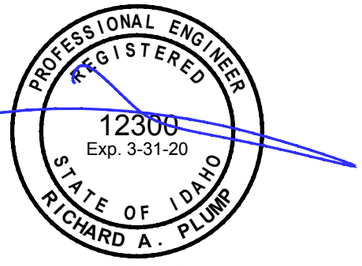

1/29/19

PLUMP ENGINEERING INC.
CONSULTING ENGINEERS IN
STRUCTURAL ENGINEERING
914 E. KATELLA AVENUE
ANAHEIM, CALIFORNIA 92805
(714) 385-1835, FAX (714) 385-1834

This design and drawing are for use on specific site indicated and is the exclusive property of PLUMP ENGINEERING INC. and shall not be used, duplicated or altered in part or in whole without written approval of PLUMP ENGINEERING INC.

Copyright 2003, © All rights reserved

STATE APPROVALS

BEAM LYFT

PATIO BRACKET DESIGN

PO BOX 2898
PASO ROBLES, CA 93447

PROJECT NO: S.150457

REVISIONS

DATE: DATE

CHECKED BY: G. PANEK

SCALE: AS NOTED

SHEET NO:

S1.1

PLOT DATE:

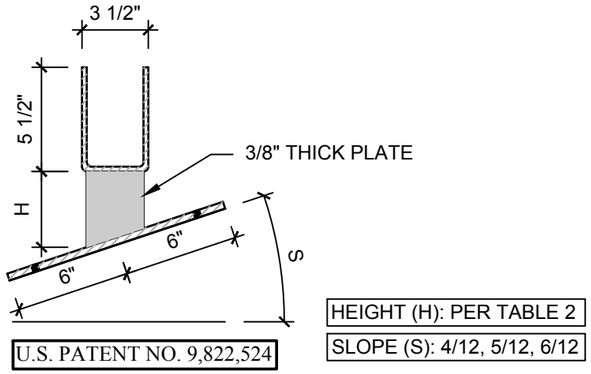

HEIGHT (H): PER TABLE 2

SLOPE (S): 4/12, 5/12, 6/12

U.S. PATENT NO. 9,822,524

RAISED ROOF BRACKET

SEE SHEET S5 FOR ADD'L INFO

2

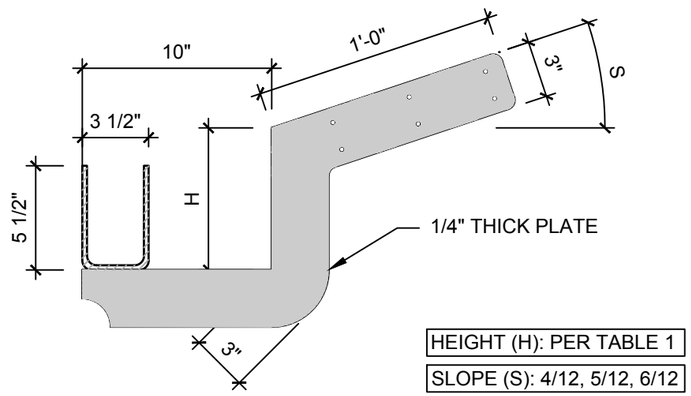

HEIGHT (H): PER TABLE 1

SLOPE (S): 4/12, 5/12, 6/12

U.S. PATENT NO. 9,822,524

RAFTER BRACKET

SEE SHEET S4 FOR ADD'L INFO

1

TABLE 2: RAISED ROOF BRACKET

DEAD LOAD	LIVE LOAD	COVER PROJECTION	BRACKET SPACING	BRACKET HEIGHT (H)
3.0 PSF	10.0 PSF	10'–0"	40'–0"	12" MAX
3.0 PSF	10.0 PSF	20'–0"	24'–0"	12" MAX
3.0 PSF	20.0 PSF	10'–0"	24'–0"	12" MAX
3.0 PSF	20.0 PSF	20'–0"	16'–0"	12" MAX
3.0 PSF	30.0 PSF	10'–0"	20'–0"	12" MAX
12.0 PSF	20.0 PSF	10'–0"	20'–0"	12" MAX
12.0 PSF	20.0 PSF	20'–0"	12'–0"	12" MAX

NOTES:

1. SEE METALS BUILDING PRODUCTS ICC–ESR 1953 FOR ALLOWABLE 3x8 HEADER SPAN.
2. RAISED ROOF BRACKET TO BE INSTALLED DIRECTLY ABOVE EXTERIOR STUD WALL.

TABLE 1: RAFTER BRACKET

DEAD LOAD	LIVE LOAD	COVER PROJECTION	BRACKET SPACING	BRACKET HEIGHT (H)
3.0 PSF	10.0 PSF	10'–0"	16'–0"	3" MIN – 8" MAX
3.0 PSF	10.0 PSF	15'–0"	10'–0"	3" MIN – 8" MAX
3.0 PSF	10.0 PSF	20'–0'	8'–0"	3" MIN – 8" MAX
3.0 PSF	20.0 PSF	10'–0"	8'–0"	3" MIN – 8" MAX
3.0 PSF	20.0 PSF	15'–0'	6'–0"	3" MIN – 8" MAX
3.0 PSF	30.0 PSF	15'–0"	4–0"	3" MIN – 8" MAX
12.0 PSF	20.0 PSF	15'–0"	4–0"	3" MIN – 8" MAX

NOTES:

1. SEE DETAILS LA32, MU107 & M3 ON METALS BUILDING PRODUCTS ICC–ESR 1953 FOR ALLOWABLE EAVE OVERHANGS & EXISTING RAFTER SIZE.
2. BRACKETS SPACING EXCEEDING ALLOWABLE SPANS PER DETAILS LA32, MU107 & M3 SHOULD BE EVALUATED ON PER EACH INDIVIDUAL CASE.

PLUMP ENGINEERING INC.
CONSULTING ENGINEERS IN
STRUCTURAL ENGINEERING
914 E. KATELLA AVENUE
ANAHEIM, CALIFORNIA 92805
(714) 385-1835, FAX (714) 385-1834

This design and drawing are for use on specific site indicated and is the exclusive property of PLUMP ENGINEERING INC. and shall not be used, duplicated or altered in part, or in whole without written approval of PLUMP ENGINEERING INC.

Copyright 2003. © All rights reserved

ALLOWABLE TABLES

BEAM LYFT

PATIO BRACKET DESIGN

PO BOX 2898
PASO ROBLES, CA 93447

PROJECT NO: S.150457

REVISIONS

DATE:

CHECKED BY: G. PANEK

SCALE: AS NOTED

SHEET NO: S2

PLOT DATE:

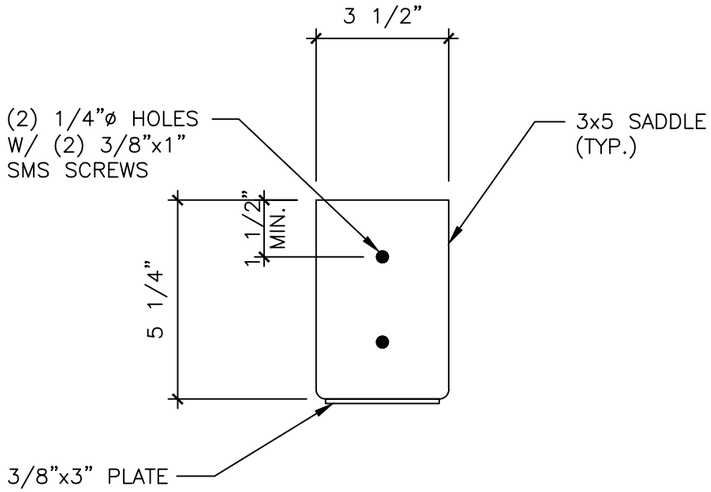

FRONT VIEW

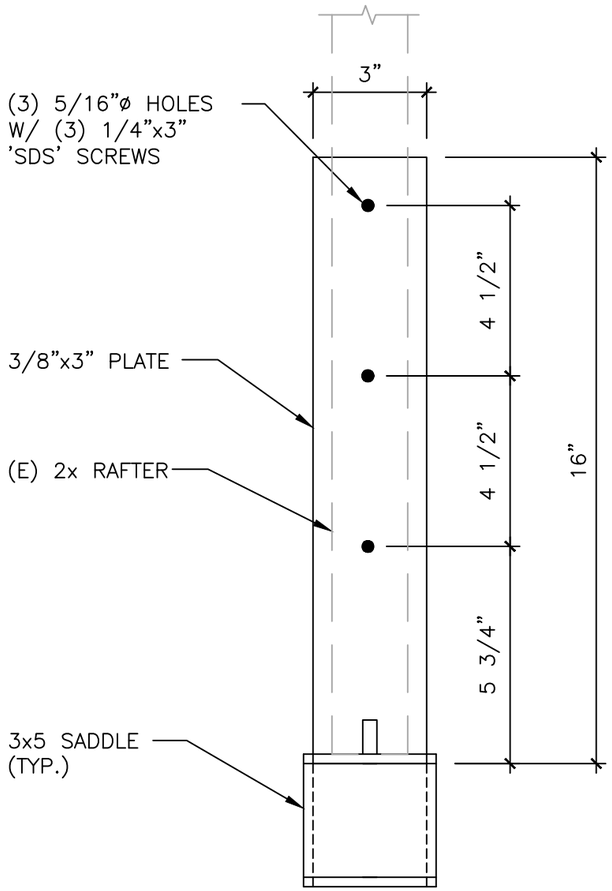

TOP VIEW

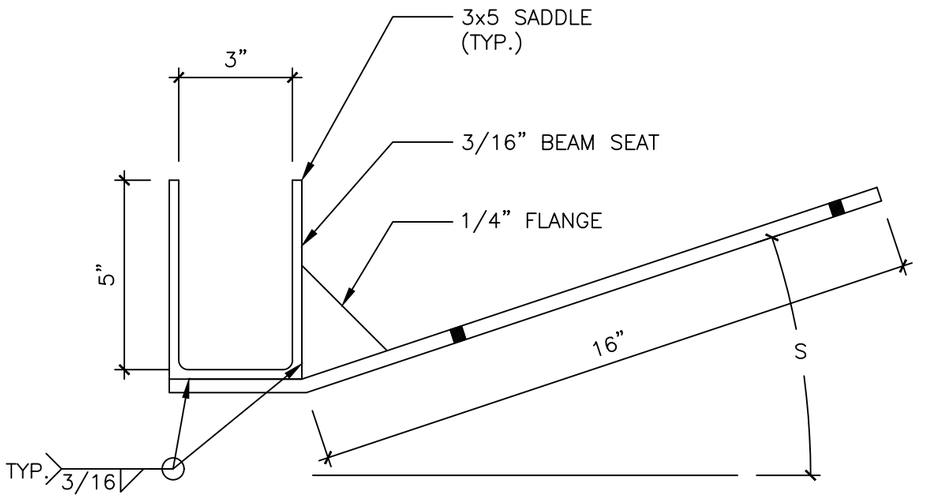

SIDE VIEW

SLOPE (S): 4/12, 5/12, 6/12

U.S. PATENT NO. 9,822,524

FLUSH ROOF BRACKET

3

TABLE 3: FLUSH FOOR BRACKET			
DEAD LOAD	LIVE LOAD	COVER PROJECTION	BRACKET SPACING
3.0 PSF	10.0 PSF	10'–0"	8'–0"
3.0 PSF	10.0 PSF	15'–0"	8'–0"
3.0 PSF	10.0 PSF	20'–0"	6'–0"
3.0 PSF	20.0 PSF	10'–0"	6'–0"
3.0 PSF	20.0 PSF	15'–0"	4'–0"
3.0 PSF	30.0 PSF	10'–0"	4'–0"
12.0 PSF	20.0 PSF	10'–0"	4'–0"

NOTES:

1. SEE DETAILS LA32, MU107 & M3 ON METALS BUILDING PRODUCTS ICC–ESR 1953 FOR ALLOWABLE EAVE OVERHANGS & EXISTING RAFTER SIZE.
2. BRACKETS SPACING EXCEEDING ALLOWABLE SPANS PER DETAILS LA32, MU107 & M3 SHOULD BE EVALUATED ON PER EACH INDIVIDUAL CASE.

PLUMP ENGINEERING INC.
CONSULTING ENGINEERS IN
STRUCTURAL ENGINEERING
914 E. KATELLA AVENUE
ANAHEIM, CALIFORNIA 92805
(714) 385-1835, FAX (714) 385-1834

This design and drawing are for use on specific site indicated and is the exclusive property of PLUMP ENGINEERING INC. and shall not be used, duplicated or altered in part or in whole without written approval of PLUMP ENGINEERING INC.

Copyright 2003, © All rights reserved

ALLOWABLE TABLES
BEAM LYFT

PATIO BRACKET DESIGN
PO BOX 2898
PASO ROBLES, CA 93447

PROJECT NO: S.150457

REVISIONS

DATE:
CHECKED BY: G. PANEK
SCALE: AS NOTED

SHEET NO:
S3

PLOT DATE:

RAFTER BRACKET

U.S. PATENT NO. 9,822,524

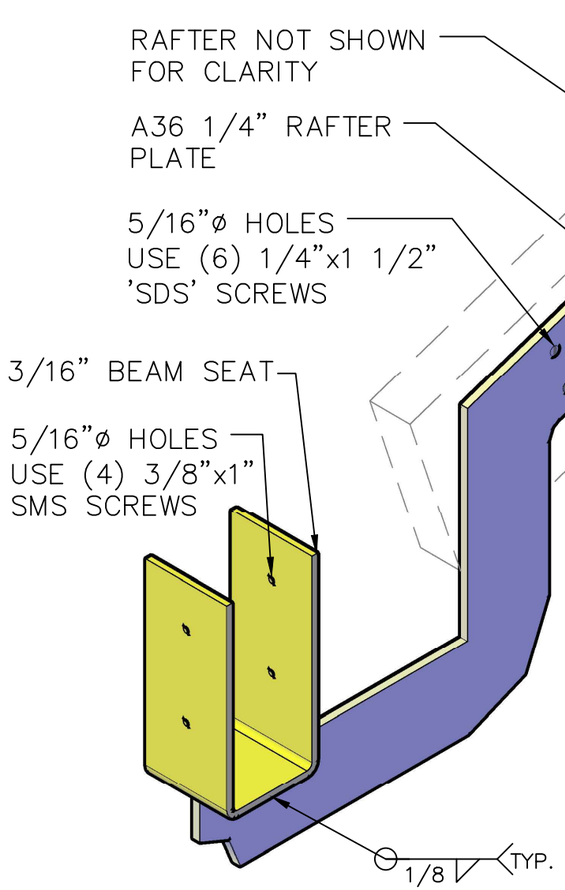

SLOPE: 4/12

SIDE VIEW

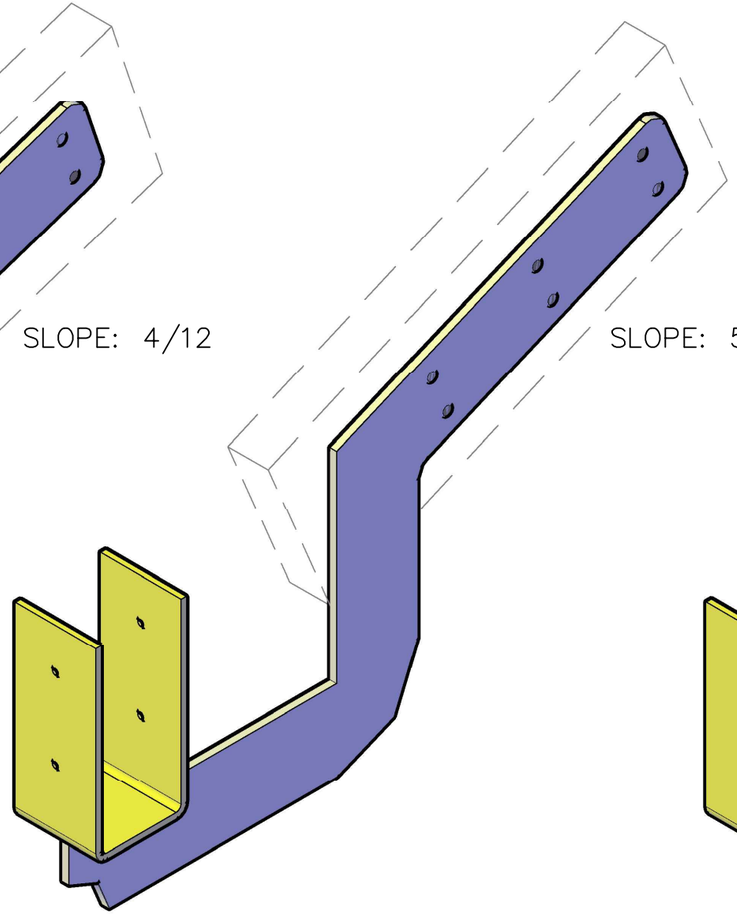

SLOPE: 5/12

SIDE VIEW

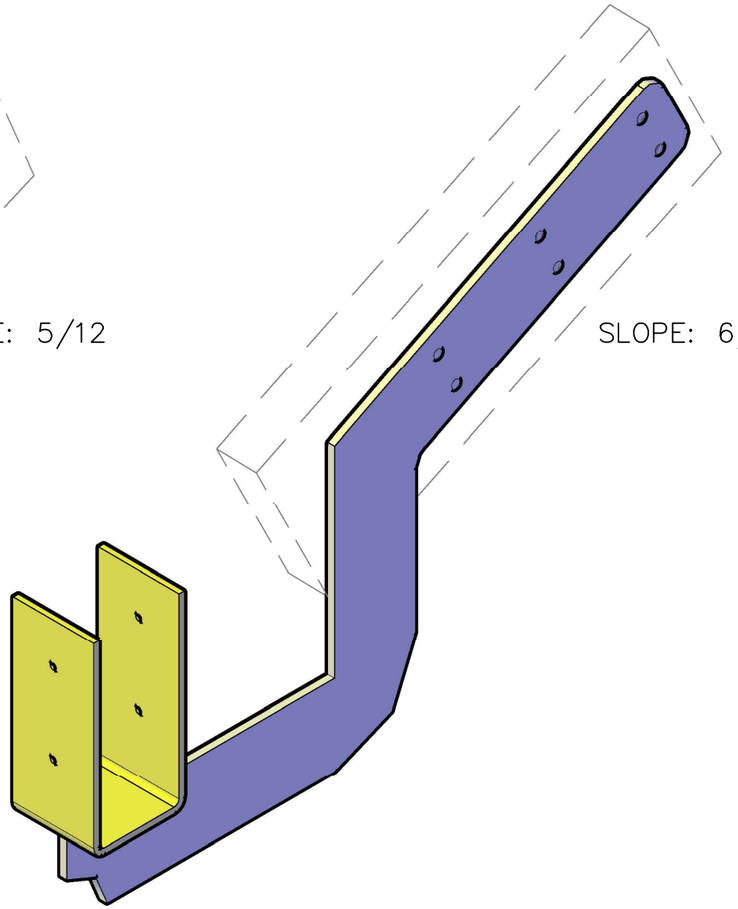

SLOPE: 6/12

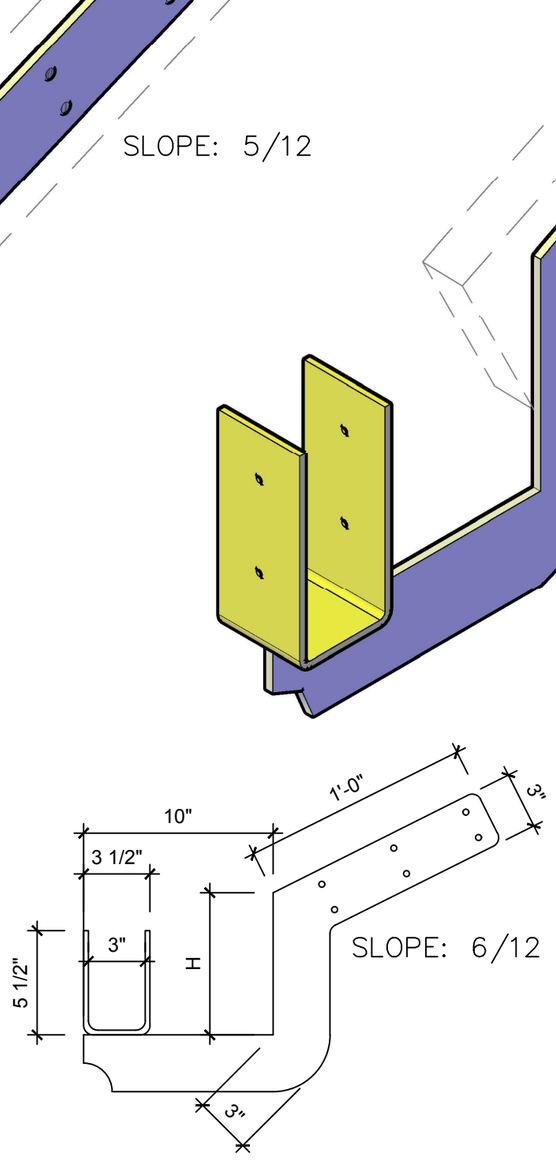

SIDE VIEW

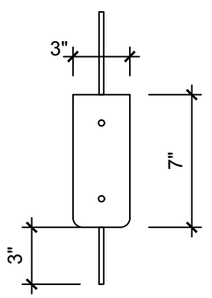

FRONT VIEW

PLUMP ENGINEERING INC.
CONSULTING ENGINEERS IN STRUCTURAL ENGINEERING
914 E. KATELLA AVENUE
ANAHEIM, CALIFORNIA 92805
(714) 385-1835, FAX (714) 385-1834

This design and drawing are for use on specific site indicated and is the exclusive property of PLUMP ENGINEERING INC. and shall not be used, duplicated or altered in part or in whole without written approval of PLUMP ENGINEERING INC.

Copyright 2003, © All rights reserved

RAFTER BRACKET
BEAM LYFT
PATIO BRACKET DESIGN
PO BOX 2898
PASO ROBLES, CA 93447

PROJECT NO: S.150457

REVISIONS

DATE: DATE

CHECKED BY: G. PANEK

SCALE: AS NOTED

SHEET NO: S4

PLOT DATE:

RAISED ROOF BRACKET

U.S. PATENT NO. 9,822,524

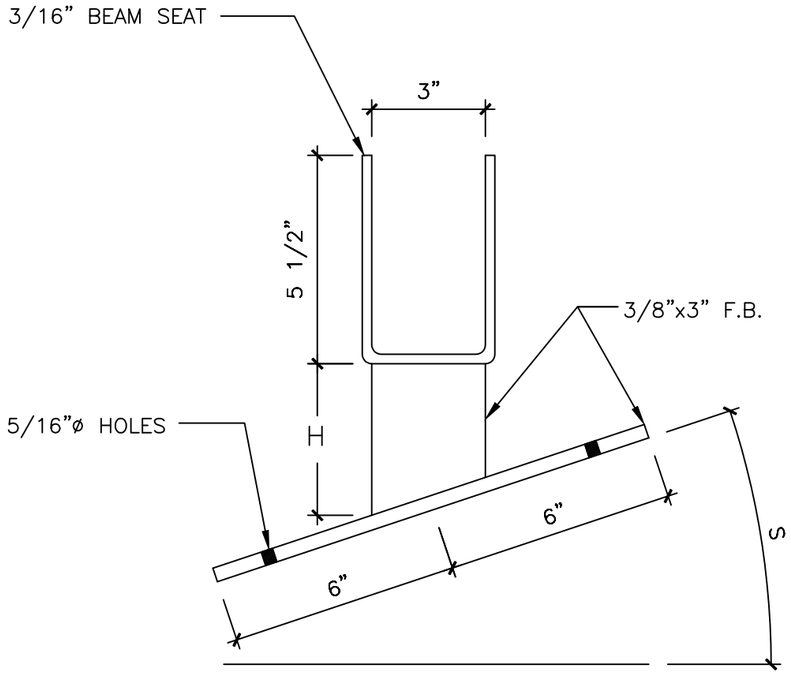

SIDE VIEW

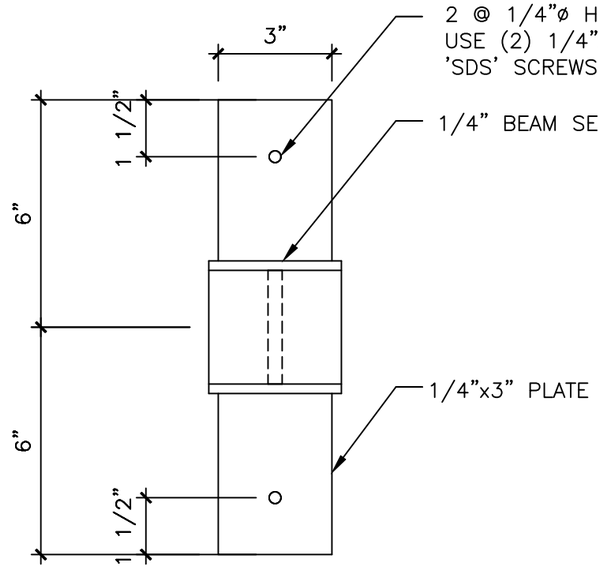

TOP VIEW

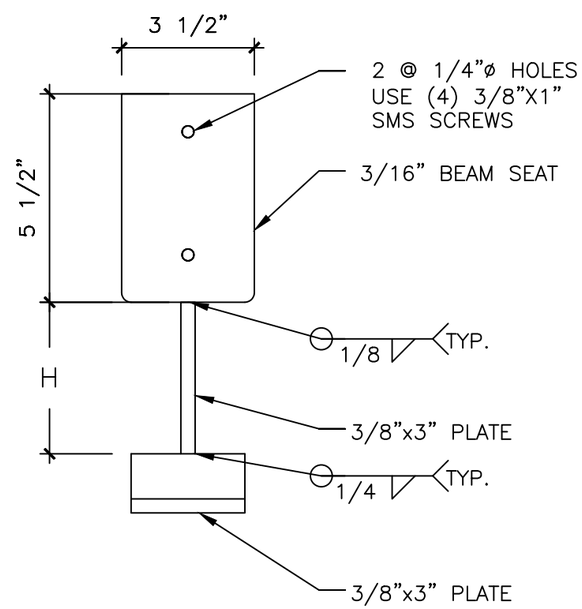

FRONT VIEW

PLUMP ENGINEERING INC.
CONSULTING ENGINEERS IN
STRUCTURAL ENGINEERING
914 E. KATELLA AVENUE
ANAHEIM, CALIFORNIA 92805
(714) 385-1835, FAX (714) 385-1834

This design and drawing are for use on specific site indicated and is the exclusive property of PLUMP ENGINEERING INC. and shall not be used, duplicated or altered in part, or in whole without written approval of PLUMP ENGINEERING INC.

Copyright 2003, © All rights reserved

RAISED ROOF BRACKET
BEAM LYFT

PATIO BRACKET DESIGN

PO BOX 2898
PASO ROBLES, CA 93447

PROJECT NO: S.150457

REVISIONS

DATE: DATE

CHECKED BY: G. PANEK

SCALE: AS NOTED

SHEET NO:
S5

PLOT DATE:

FLUSH ROOF BRACKET

U.S. PATENT NO. 9,822,524

ROOF TILE OR SHINGLE

ROOF PAPER (MOISTURE BARRIER)

(E) ROOF RAFTER, NOT SHOWN FOR CLARITY

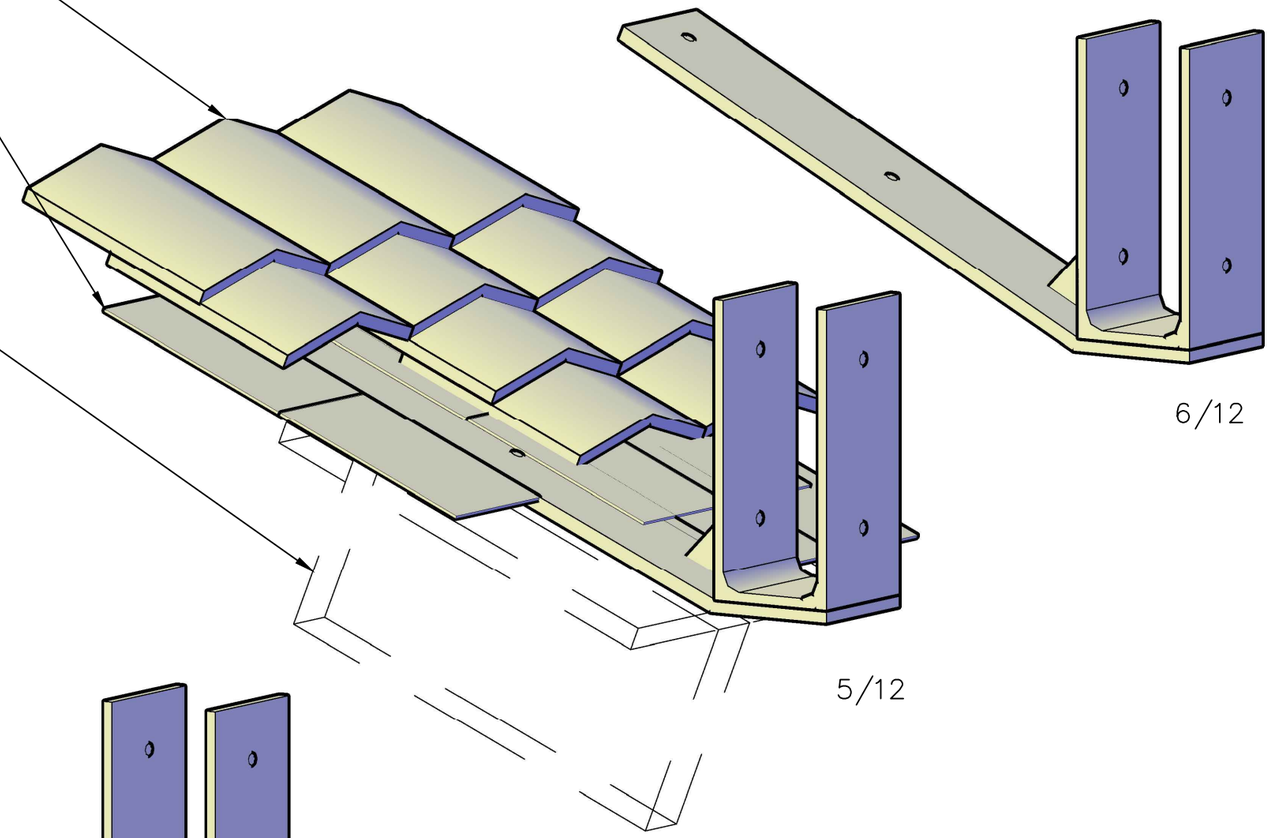

6/12

5/12

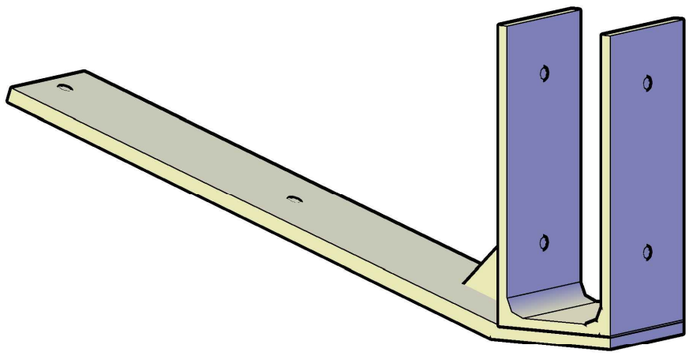

4/12

PLUMP ENGINEERING INC.
CONSULTING ENGINEERS IN
STRUCTURAL ENGINEERING
914 E. KATELLA AVENUE
ANAHEIM, CALIFORNIA 92805
(714) 385-1835, FAX (714) 385-1834

This design and drawing are for use on specific site indicated and is the exclusive property of PLUMP ENGINEERING INC. and shall not be used, duplicated or altered in part, or in whole without written approval of PLUMP ENGINEERING INC.

Copyright 2003, © All rights reserved

FLUSH ROOF BRACKET

BEAM LYFT

PATIO BRACKET DESIGN

PO BOX 2898
PASO ROBLES, CA 93447

PROJECT NO:	S.150457
REVISIONS	
DATE:	DATE
CHECKED BY:	G. PANEK
SCALE:	AS NOTED

SHEET NO:

S6

PLOT DATE: