Amerimax Exterior Home Products Alumawood™ Patio Cover, Carport and Commercial Structure Engineering 2015 IBC

PAGES	DRAWING	SECTION DESCRIPTION
2 PAGES	GN01-2015 GN02-2015	GENERAL NOTES
1 PAGE		PROFESSIONAL ENGINEERING STAMPS PAGE
2 PAGES	SC01-2015 SC02-2015	SOLID PANEL STRUCTURAL CONFIGURATIONS ALUMAWOOD STRUCTURAL CONFIGURATIONS
3 PAGES		SECTION 1.0 RAFTER SPANS FOR COMMERCIAL AND PATIO STRUCTURES
22 PAGES		SECTION 2.0 POST SPACING, POST TYPE AND FOOTING SIZE FOR LATTICE COVERS
4 PAGES	LT01-2015 LT02-2015 LT03-2015 LT04-2015	COMPONENT PARTS AND CONNECTION DETAILS FOR LATTICE STRUCTURES
4 PAGES		SECTION 4.0 SOLID COVER PANEL SPANS FOR COMMERCIAL AND PATIO STRUCTURES
23 PAGES		SECTION 5.0 POST SPACING, POST TYPE AND FOOTING SIZE FOR SOLID COVERS
4 PAGES	NP01-2015 NP02-2015 NP03-2015 NP04-2015	COMPONENT PARTS AND CONNECTION DETAILS FOR NEWPORTS
9 PAGES	CD01-2015 CD02-2015 CD03-2015 CD04-2015 CD05-2015 CD06-2015 CD07-2015 CD08-2015 CD09-2015	COMPONENT PARTS AND CONNECTION DETAILS
10 PAGES	Misc1a-2015	MISCELLANEOUS DETAILS
	Misc1b-2015	MISCELLANEOUS DETAILS
	Misc2-2015	FAN BEAM DETAILS
	Misc3-2015	7.0 POST AND FASTENER REQUIREMENTS FOR ALL STRUCTURES
	Misc4-2015	7.0 FOOTING AND SLAB ATTACHMENT TABLES
	Misc5a-2015	7.0 REQUIREMENTS FOR SURFACE MOUNTED POSTS ON CONCRETE SLABS OR FOOTINGS
	Misc5b-2015	7.0 REQUIREMENTS FOR SURFACE MOUNTED POSTS ON CONCRETE SLABS OR FOOTINGS
	Misc6-2015	7.0 FORCES ON EXISTING STRUCTURES
	Misc7-2015	STRUCTURAL PROPERTIES OF BEAMS, FASCIA, PANELS AND RAFTERS FOR USE BY DESIGN PROFESSIONALS
	Misc8-2015	CONCRETE SLAB REQUIREMENTS FOR CONSTRAINED FOOTINGS

PROFESSIONAL ENGINEER
CARL PUTNAM
C68139
EXP. 6/30/2019
CIVIL
STATE OF CALIFORNIA

May 27 2017

January 12, 2017

GENERAL NOTES:

1. DESIGNED IN ACCORDANCE WITH THE 2015 INTERNATIONAL BUILDING CODE.

2. ALUMINUM DESIGN IN ACCORDANCE WITH THE 2015 EDITION OF ALUMINUM ASSOCIATION'S SPECIFICATIONS AND CHAPTER 20 OF THE INTERNATIONAL BUILDING CODE.

3. DESIGN LOADINGS: Ct = 1.2, I = 1.0, Ce = 1.0 (ALL EXPOSURES EXCEPT B AND C WHEN LOCATED TIGHT AMONG CONIFERS)

GROUND SNOW LOAD	DESIGN LOAD	
10 PSF	10 PSF	LIVE LOAD ONLY
20 PSF	20 PSF	LIVE LOAD ONLY
25 PSF	21.0 PSF	DESIGN ROOF SNOW LOAD
30 PSF	25.2 PSF	DESIGN ROOF SNOW LOAD
35.7 PSF	30.0 PSF	DESIGN ROOF SNOW LOAD
42 PSF	35.3 PSF	DESIGN ROOF SNOW LOAD
50 PSF	42.0 PSF	DESIGN ROOF SNOW LOAD
60 PSF	50.4 PSF	DESIGN ROOF SNOW LOAD

FOR 0.25/12 < SLOPE < 1/12

WIND SPEEDS IN THE 2015 IBC ARE "ULTIMATE DESIGN WIND SPEED". ALL STRUCTURES DESCRIBED IN THIS REPORT ARE DESIGNED USING PRESSURES CALCULATED FROM "ULTIMATE DESIGN WIND SPEEDS" FOR RISK CATEGORY II. FOR ATTACHED STRUCTURES THE MAXIMUM MEAN ROOF HEIGHT OF THE EXISTING STRUCTURE IS 30'. Kzt WAS ASSUMED AS 1.0 FOR ALL WIND LOADS. SITE LOCATIONS REQUIRING HIGHER A HIGHER Kzt VALUE (ISOLATED HILLS, RIDGES, ESCARPMENTS) WILL REQUIRE HIGHER WIND LOADS AS PER ASCE7-10 SECTION 26.8 AND ARE OUTSIDE THE SCOPE OF THIS REPORT.

NOTE: EXPOSURE B: SHALL APPLY WHEN THE GROUND SURFACE ROUGHNESS CATEGORY B (URBAN AND SUBURBAN AREAS, WOODED AREAS, OR OTHER TERRAIN W/ NUMEROUS CLOSELY SPACED OBSTRUCTIONS HAVING THE SIZE OF A SINGLE FAMILY DWELLING OR LARGER) PREVAILS IN THE UPWIND DIRECTION FOR A DISTANCE OF AT LEAST 1500 FT.

EXPOSURE C: SHALL APPLY WHEN EXPOSURE B AND D (SMOOTH MUD FLATS, SALT FLATS, UNBROKEN ICE AND OTHER) DO NOT.

SEISMIC LOADING
MAXIMUM Ss = 150% SHOWN IN 2015 IBC FIGURE 1613.3.1(1)
Ss > 150% ARE NOT REQUIRED AS PER ASCE7-10 12.8.1.3
S1 NOT APPLICABLE TO THESE STRUCTURES
SITE CLASS = D
BASIC SEISMIC FORCE RESISTING SYSTEM
POSTS EMBEDDED INTO FOOTINGS =ORDINARY STEEL MOMENT FRAME >> R = 1.25
POSTS SURFACE MOUNTED = GENERIC SYSTEM >> R= 1.25
ANALYSIS PROCEDURE = EQUIVALENT LATERAL FORCE PROCEDURE

THESE ROOFS ARE NOT SUBJECT TO MAINTENANCE WORKERS AND HAVE NOT BEEN EVALUATED FOR A CONCENTRATED 300 LBF LOAD.

THE BASIS OF THE DESIGN FORCES ARE IN ACCORDANCE WITH THE BASIC LOAD COMBINATIONS DESCRIBED IN IBC SECTION 1605.3.1.1 AND NO FURTHER INCREASES ARE PERMITTED FOR PATIO COVERS RESISTING WIND OR SEISMIC FORCES.

4. THIS ENTIRE ENGINEERING PACKAGE IS NOT REQUIRED FOR MOST BUILDING PERMITS. SUBMISSION FOR A BUILDING PERMIT MUST INCLUDE:
a. GENERAL NOTES (2 PAGES)
b. STRUCTURAL CONFIGURATIONS (1 OR 2 PAGES)
c. RAFTER SPAN TABLES (FOR LATTICE STRUCTURES), PANEL SPAN TABLES FOR SOLID COVER STRUCTURES) OR BOTH (FOR COMBINATION STRUCTURES)
d. HEADER POST SPACING, FOOTING SIZE AND POST TABLE FOR LIVE/SNOW AND WIND LOAD
e. ALL APPROPRIATE DETAILS
f. OTHER DOCUMENTATION REQUIRED BY LOCAL BUILDING AUTHORITY.

5. CONCRETE MIX: CONCRETE WILL MEET THE DURABILITY REQUIREMENTS OF ACI 318-14. PATIO STRUCTURES MAY BE ATTACHED TO CONCRETE SLAB WITHOUT FOOTINGS WHEN THE POST LOAD IS 750# OR LESS AND THE FROST DEPTH IS ZERO. CONCRETE SHALL BE A MINIMUM OF 3.5 INCHES THICK AND NO CRACKS WITHIN 2'-6" OF POSTS. POSTS SHALL BE SET BACK A MINIMUM OF 4 INCHES FROM EDGE OR EXPANSION JOINT OF A SLAB.

6. FOOTINGS HAVE BEEN DESIGNED FOR CLASS 5 SOIL AS PER TABLE 1806.2. ALLOWABLE FOUNDATION PRESSURE IS 1500 POUNDS PER SQUARE FOOT. LATERAL BEARING PRESSURE IS 100 PSF/FT AND IS DOUBLED PER IBC SECTION 1806.3.4. THESE DESIGN VALUES DO NOT APPLY TO MUD, ORGANIC SILTS, ORGANIC CLAYS, PEAT OR UNPREPARED FILLS AND MAY REQUIRE FURTHER SOIL INVESTIGATION. THE BUILDING OFFICIAL MAY ASSIGN A LOAD BEARING CAPACITY. UNITS IN SNOW/LIVE LOAD AREA OF 25 PSF OR LESS MAY BE BUILT ON 1000 PSF BEARING SOIL W/O ADDITIONAL ENGINEERING. MINIMUM FOOTING DEPTH IS THE LOCAL FROST DEPTH.

7. 20 PSF AND HIGHER LIVE LOAD STRUCTURES MAY BE USED AS COVERS FOR PARKING OF MOTOR VEHICLES. CARPORTS MUST HAVE AT LEAST TWO OPEN SIDES AND HAVE FLOOR SURFACES MADE OF APPROVED NONCOMBUSTIBLE MATERIAL OR ASPHALT.

8. AT LEAST ONE HORIZONTAL DIMENSION (PROJECTION OR WIDTH) OF COVER SHALL BE LESS THAN 30'.

9. ALL STEEL SHALL BE GALVANIZED ASTM A-653 G90, A123 G45 OR A153 B-3, PAINTED ASTM A755 OR USE AN APPROVED COATING COMPLYING WITH IBC SECTION 2203.2.

10. ALTERNATE ALUMINUM ALLOYS OF EQUAL OR HIGHER STRENGTHS MAY BE USED. 3004H2x ALUMINUM MAY BE SUBSTITUTED FOR 3004H3x.

PROFESSIONAL ENGINEER
CARL PUTNAM
C 68139
EXP. 6/30/2019
CIVIL
STATE OF CALIFORNIA

May 27 2017
ENGINEER'S STAMP

Amerimax
EXTERIOR HOME PRODUCTS
28921 US Hwy 74
Romoland, CA 92585

DRAWN BY: CMP		
SCALE: NONE	DRAWING OR PART NAME GENERAL NOTES	
DATE:	DRAWING OR PART NUMBER GN01–2015	SHEET 1 OF 2

GENERAL NOTES:
(CONTINUED FROM SHEET NO. 1)

11. STEEL FASTENERS SHALL BE EITHER STAINLESS (3000 SERIES), GALVANIZED OR DOUBLE CADMIUM PLATED. BOLTS SHALL BE ASTM A-307 HOT DIPPED GLAVANIZED, MECHANICALLY GALVANIZED, ZINC ELECTROPLATED, ALUMINIZED OR 300 SERIES STAINLESS STEEL. CONCRETE ANCHOR BOLTS ARE SPECIFIED IN THE DETAILS. ALL WOOD SCREWS MUST COMPLY WITH ANSI/ASME STANDARD B18.6.1 AHD AND AF&PA NDS-05 11.1.4. ALL LAG SCREWS MUST COMPLY WITH ANSI/ASME B18.2.1 AND AF&PA NDS-05 11.1.3. ALL STEEL WASHERS TO BE ASTM F844 W/ DIMENSIONS IN ACCORDANCE WITH ASME B18.22.1, TYPE A. ALL STEEL NUTS TO BE ASTM A563. THE MINIMUM WASHER DIAMETER SHALL BE 1" FOR BOLTED CONNECTIONS. SCREWS AND BOLTS WILL HAVE A MINIMUM EDGE DISTANCE OF 2X FASTENER DIAMETER.

12. EMBEDDED POST SURFACES SHALL BE CLEAN AND FREE FROM OILY SURFACES.

13. HEADER SPLICES SHALL NOT BE LOCATED NEARER TO THE END OF THE STRUCTURE THAN THE FIRST INTERIOR POST. (EXCEPT FOR FULL STRENGTH SPLICES) FULL STRENGTH SPLICES (DETAILS U, AND X) MAY BE LOCATED ANYWHERE.

14. ALL SELF DRILLING AND SELF TAPPING SCREWS MUST COMPLY TO ICC- ESR 1271, 1408, 1976, 2196, 3006, 3215, 3223, 3231, 3294, 3332, 3528, 3558 OR EQUIVALENT AND USE HEADS W/ DIAMETERS EQUAL TO #8 =$\frac{5}{16}$", #10 = $\frac{3}{8}$", #12 = $\frac{13}{32}$" AND #14 = $\frac{1}{2}$" OR STEEL WASHERS OF SIMILAR DIAMETER AND AS PER GENERAL NOTE #11

15. STRUCTURES MAY NOT BE ENCLOSED IN ANY MANNER WITHOUT ADDITIONAL ENGINEERING ANALYSIS OR APPROVAL OF THE LOCAL BUILDING AUTHORITY.

16. ALUMINUM SOLID ROOF PANELS ARE CLASS A FIRE RATED AS INDICATED BY THE EXCEPTION #2 IN IBC SECTION 1505.2.

17. STRUCTURES MAY BE ATTACHED TO EAVE OVERHANGS PER SCHEDULE.

18. WHERE ALUMINUM ALLOY PARTS ARE IN CONTACT WITH DISSIMILAR METALS (OTHER THAN STAINLESS, ALUMINIZED OR GALVANIZED STEEL) OR ABSORBENT BUILDING MATERIALS, LIKELY TO BE CONTINUOUSLY OR INTERMITTENTLY WET, THE FAYING SURFACES SHALL BE PAINTED OR OTHERWISE SEPARATED IN ACCORDANCE WITH THE ALUMINUM DESIGN MANUAL PART I-A SECTION 6.7.

19. WHEN A SINGLE SPAN ATTACHED UNIT IS ATTACHED TO A WOODEN DECK, THE MAXIMUM DEAD LOAD + LIVE LOAD FROM THE PATIO COVER IS 750 LBS AND THE POST SPACING SHALL NOT EXCEED THAT SPECIFIED FOR ATTACHING TO A CONCRETE SLAB. THE MAXIMUM CONNECTION UPLIFT LOAD IS 1162 LBS FOR 115 MPH EXP C WIND SPEED. CONNECTIONS ARE FOR MAXIMUM PATIO ROOF HEIGHTS OF 12 FT FROM GRADE. THE EXISTING DECK STRUCTURE MUST BE ADEQUATE TO SUSTAIN THESE ADDITIONAL LOADS. THE STRUCTURAL ADEQUACY OF THE DECK TO SAFELY SUSTAIN THESE ADDITIONAL LOADS WILL REQUIRE APPROVAL BY LOCAL BUILDING AUTHORITY OR ADDITIONAL ENGINEERING. SEE DETAIL L13, N12 OR AL. CONSTRUCTION OUTSIDE OF THESE PARAMETERS MAY REQUIRE ADDITIONAL ENGINEERING.

20. **All structures must comply with one of the following:**

- **a. All structures with a roof snow load of 30 psf or less may be built in Seismic Design Category (SDC) A-D up to the maximum Ss noted in General Note #3.**
- **b. Structures with flat roof design snow loads over 30 psf complying with IBC Section 1613.1 Exception #1 do not require additional seismic analysis.**
- **c. Structures not complying with (a) or (b) must have constrined footings and are limited to the Ss shown in Section 2.0 or 5.0.**

21. DRIFTING SNOW IS ADDRESSED IN DETAIL M4. SLIDING SNOW IS BEYOND THE SCOPE OF THIS REPORT.

22. ALL MULTISPAN TABLES AND DETAILS ASSUME EQUAL SPANS WITHIN 20%. ALL SPECIFICATIONS MUST BE BASED ON LONGEST ACTUAL SPAN.

23. WOOD USED IN CONNECTIONS SHALL BE PROTECTED FROM WEATHER AS PER IBC SECTION 1403.2 (WALLS) AND/OR 1503 (ROOFS), WHICHEVER IS MORE APPROPRIATE.

24. AT LEAST ONE HORIZONTAL DIMENSION OF THE COVER (PROJECTION OR WIDTH) SHALL BE LESS THAN 30'

GENERAL NOTES FOR LATTICE STRUCTURES:
(PERTAINS TO LATTICE STRUCTURES ON DRAWINGS SC02-2012 AND LT01-2015 THRU LT03-2015.)

1. SEE GENERAL NOTE #3 FOR LIVE AND SNOW LOADS.

2. NOTE INTENTIONALLY LEFT BLANK.

3. SINGLE SPAN ATTACHED LATTICE STRUCTURES THAT DO NOT USE DETAIL L29 MUST COMPLY WITH TABLE L1 AND L2 ON SHEET M5.

PROFESSIONAL ENGINEER
CARL PUTNAM
C 68139
EXP. 6/30/2019
CIVIL
STATE OF CALIFORNIA

May 27 2017
ENGINEER'S STAMP

Amerimax
EXTERIOR HOME PRODUCTS
28921 US Hwy 74
Romoland, CA 92585

DRAWN BY: CMP		
SCALE: NONE	DRAWING OR PART NAME: GENERAL NOTES	
DATE:	DRAWING OR PART: GN02-2015	SHEET 2 OF 2

PROFESSIONAL ENGINEERING STAMPS PAGE

JAN 13 2017

EXPIRES: 12/31/2016

EXPIRES 2/25/2018

May 27 2017

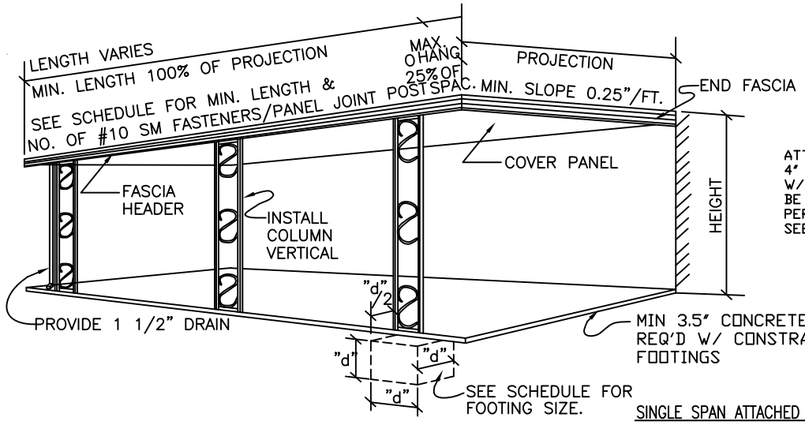

SINGLE SPAN ATTACHED STRUCTURE

ATTACHMENT TO MIN 4" CONCRETE SLAB W/O A FOOTING MAY BE USED WHERE PERMITTED SEE SCHEDULE

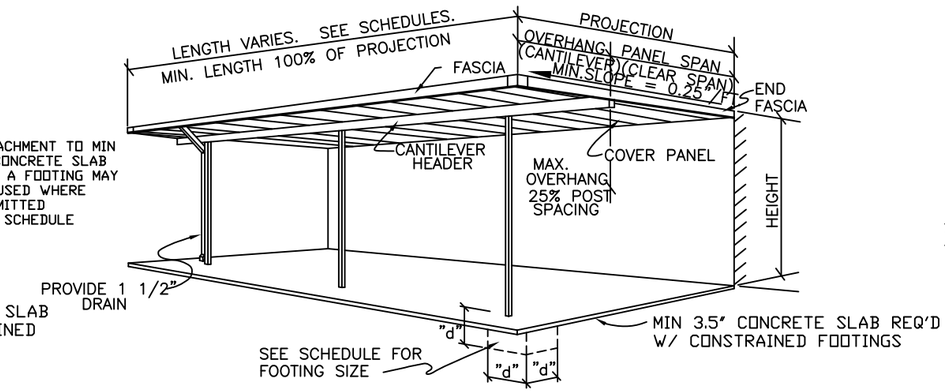

SINGLE SPAN ATTACHED CANTILEVERED STRUCTURE

NOTE: SEE SCHEDULE FOR POSTS. ALL POSTS TO BE INSTALLED VERTICALLY. MAY HAVE MORE THAN 2 POSTS (PER INTERMEDIATE BEAM).

MULTISPAN FREESTANDING STRUCTURE

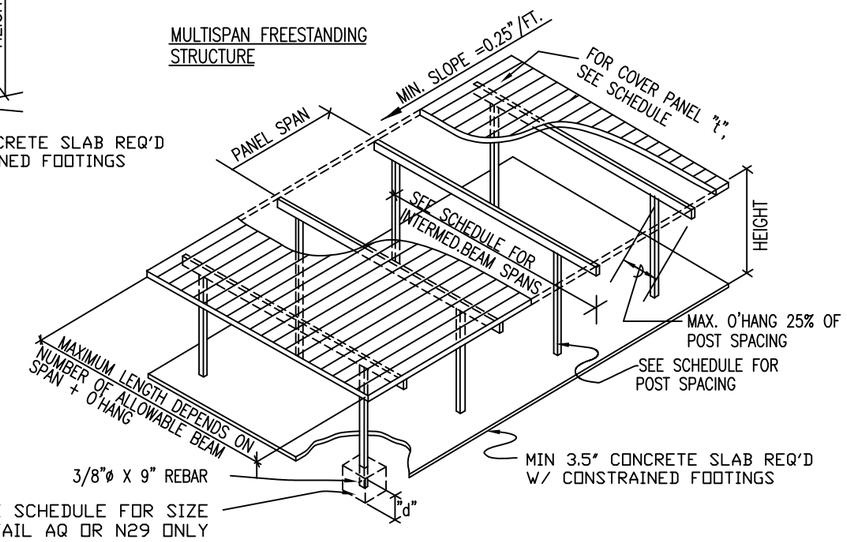

SINGLE SPAN FREESTANDING STRUCTURE

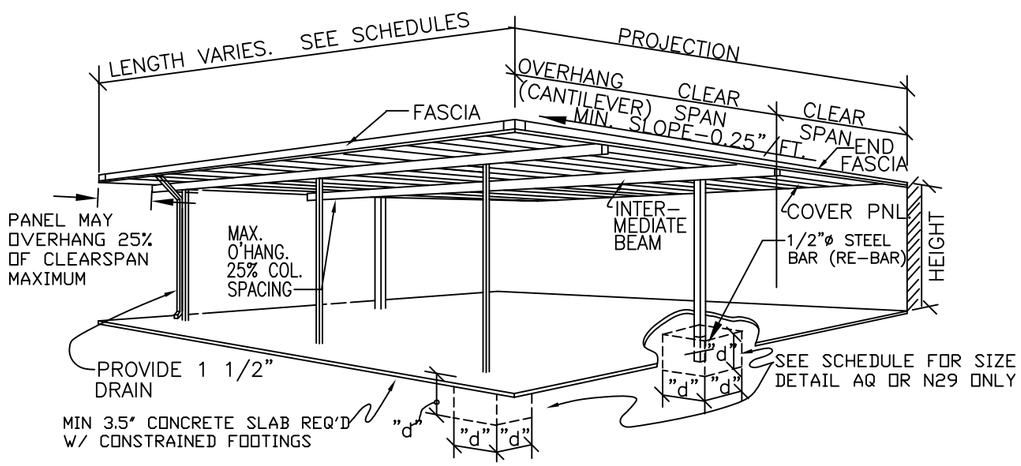

MULTISPAN ATTACHED CANTILEVERED STRUCTURE

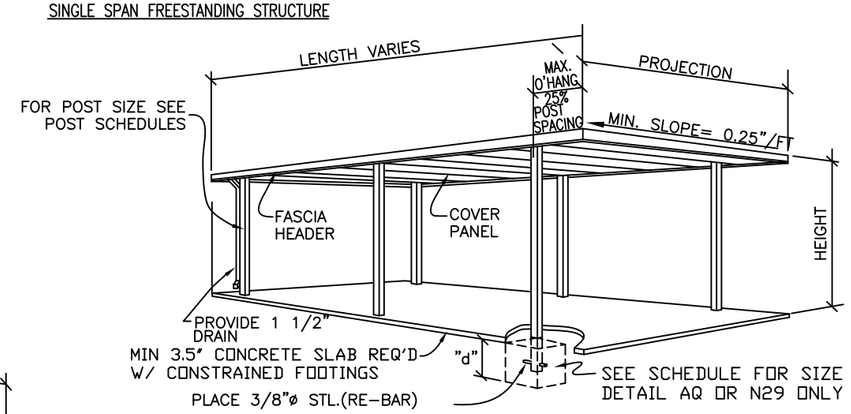

PATIO COVERS ARE LIMITED TO 12' HEIGHT. CARPORTS AND COMMERCIAL STRUCTURES ARE LIMITED TO 15' HEIGHT.

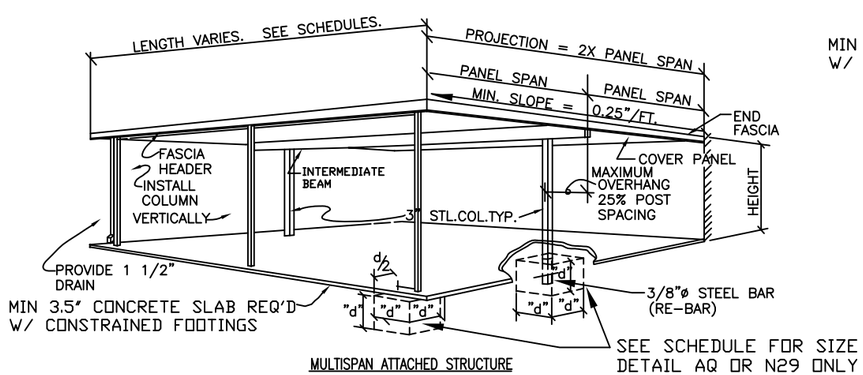

MULTISPAN ATTACHED STRUCTURE

PROFESSIONAL ENGINEER CARL PUTNAM C 68139 EXP. 6/30/2019 CIVIL STATE OF CALIFORNIA

May 27 2017

ENGINEER'S STAMP

Amerimax EXTERIOR HOME PRODUCTS

28921 US Hwy 74
Romoland, CA 92585

DRAWN BY: CMP		
SCALE: NONE	DRAWING OR PART NAME: SOLID PANEL STRUCTURAL CONFIGURATIONS	
DATE:	DRAWING OR PART NUMBER: SC01-2015	SHEET 1 OF 2

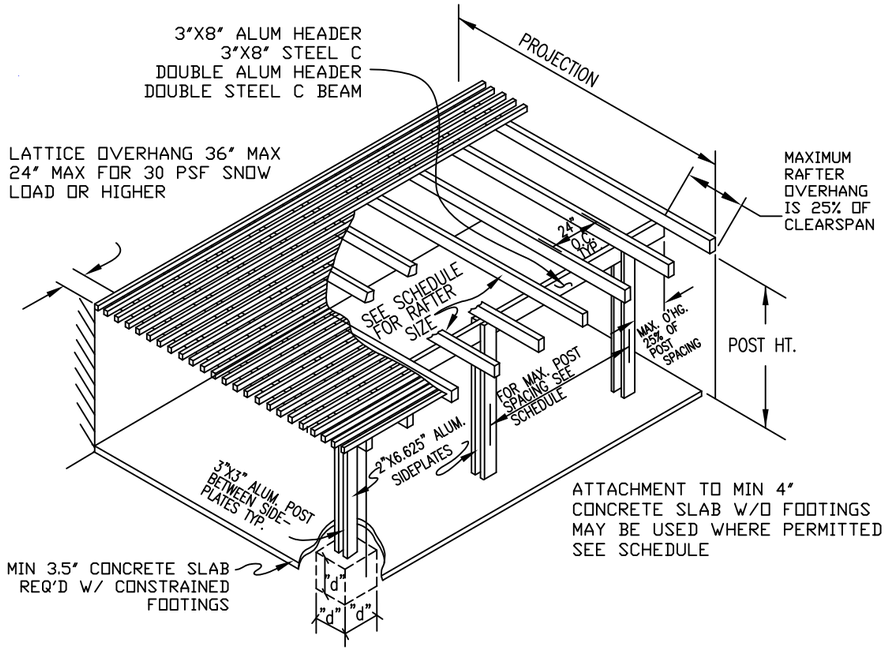

MULTISPAN FREESTANDING
LATTICE STRUCTURE

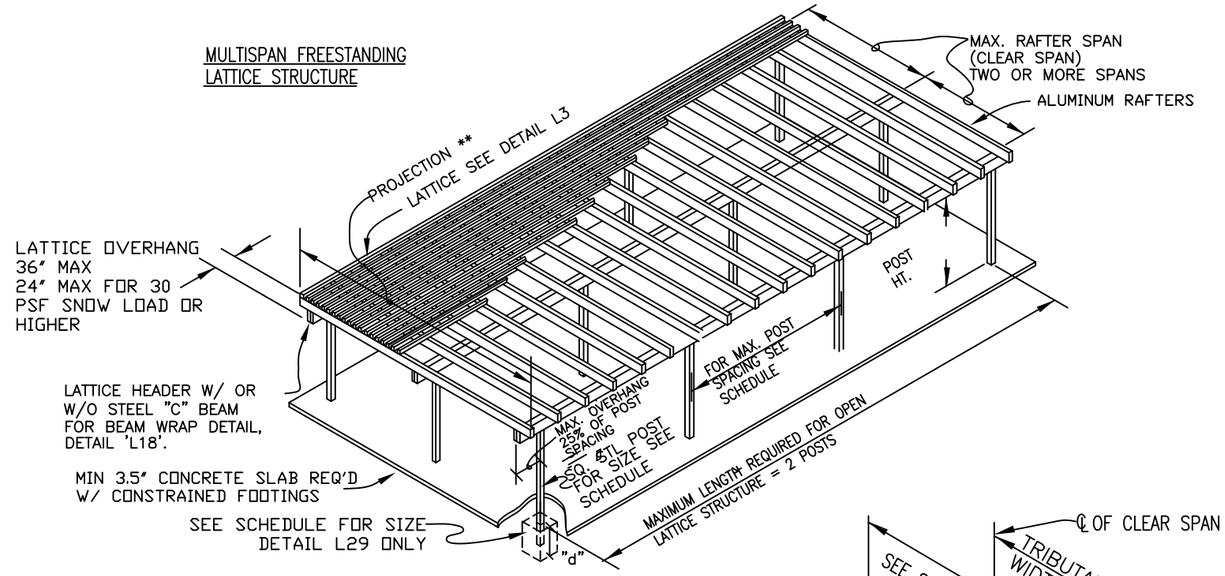

SINGLE SPAN ATTACHED
LATTICE STRUCTURE

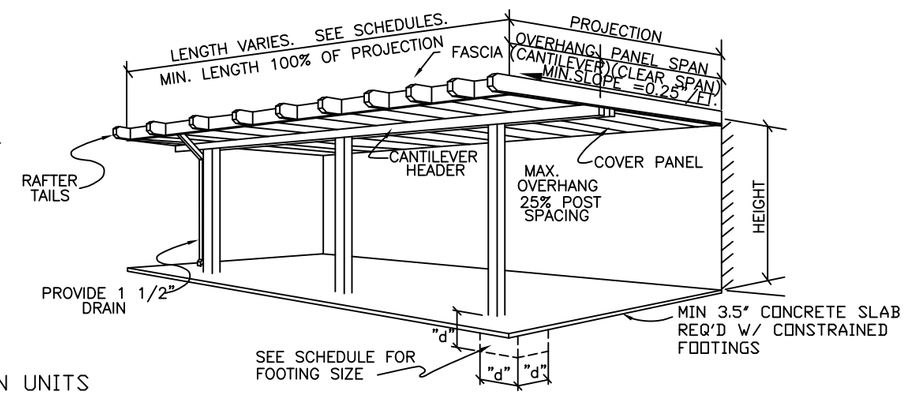

SINGLE SPAN ATTACHED CANTILEVERED STRUCTURE

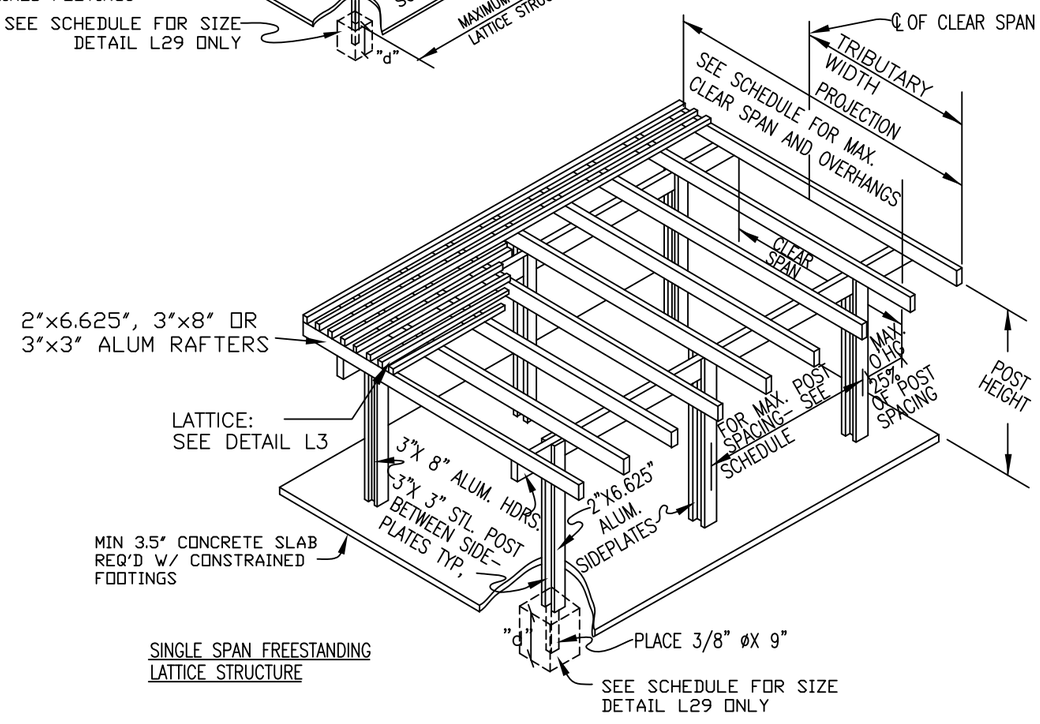

SINGLE SPAN FREESTANDING
LATTICE STRUCTURE

MULTISPAN UNITS
REFER TO GENERAL
NOTE 22.

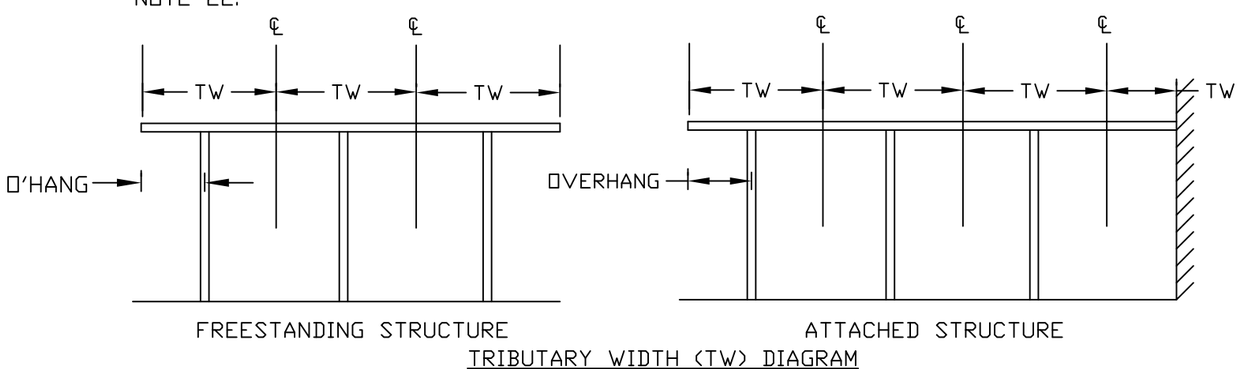

FREESTANDING STRUCTURE

ATTACHED STRUCTURE

TRIBUTARY WIDTH (TW) DIAGRAM

PROFESSIONAL ENGINEER
CARL PUTNAM
C 68139
EXP. 6/30/2019
CIVIL
STATE OF CALIFORNIA

May 27 2017

ENGINEER'S STAMP

Amerimax
EXTERIOR HOME PRODUCTS

28921 US Hwy 74
Romoland, CA 92585

DRAWN BY: CMP		
SCALE: NONE	DRAWING OR PART NAME: ALUMAWOOD STRUCTURAL CONFIGURATIONS	
DATE:	DRAWING OR PART NUMBER: SC02-2015	SHEET 2 OF 2

SECTION 1.0 LATTICE COVER INSTRUCTIONS AND POST TABLES

GENERAL INSTRUCTIONS FOR THESE TABLES

1. CHOOSE FREESTANDING OR ATTACHED STRUCTURE
2. CHOOSE PROJECTION, WIDTH AND OVERHANG OF UNIT
3. DETERMINE WIND AND LIVE OR SNOW LOAD OF STRUCTURE SITE
   (PATIO UNITS USE 10 PSF MIN, COMMERCIAL UNITS USE 20 PSF MIN)
4. CHOOSE A RAFTER FROM **SECTION 1.0** THAT HAS
   ADEQUATE CLEARSPAN FOR YOUR NEEDS.
5. DETERMINE TRIBUTARY WIDTH FROM TABLE 1.1 OR CALCULATE
   FROM TRIBUTARY DIAGRAM ON **SC02 PAGE 2 OF 2**
6. LOCATE HEADER TABLE IN **SECTION 2.0** W/ CORRECT PARAMETERS
   a. GROUND SNOW LOAD, SEE GEN NOTE #3
   b. LIVE LOAD, SEE #3 ABOVE
   c. WIND SPEED, SEE GEN NOTE #3
   d. EXPOSURE, SEE GEN NOTE #3
   e. SEISMIC, SEE GEN NOTE #3
   f. ATTACHED OR FREESTANDING
   g. a-e ARE SET BY YOUR LOCAL BUILDING AUTHORITY
7. CHOOSE A HEADER FROM TABLES IN **SECTION 2.0** THAT HAS ADEQUATE POST SPACING
8. DETERMINE FOOTING SIZE
   USE THE UPLIFT FOOTING IF **BOTH** OF THESE CONDITIONS ARE MET
   a. STRUCTURE IS ATTACHED TO AN EXISTING STRUCTURE
   b. TABLES L1 AND L2 ARE SATISFIED
   c. GO TO #9a

   IF **EITHER** a OR b ARE **NOT** TRUE THEN:
   a. CHOOSE CONSTRAINED FOOTING SIZE BASED ON THE 3 CHOICES OF POST HEIGHT
   b. USE THE **LARGER** OF THE UPLIFT OR CONSTRAINED FOOTING SIZE
   c. CONSTRAINED FOOTINGS **MUST** USE DETAIL L29 OR M5
   d. GO TO 9b
9. DETERMINE POST TYPE
   a. IF **BOTH** 8a AND 8b ARE TRUE THEN USE POST SHOWN IN TABLE UNDER "MIN POST TYPE"
      CROSS REFERENCE LETTER CODE W/ TABLE 1.2
      IF THIS POST'S MAX HEIGHT IS TOO SHORT, UPGRADE THE POST.

   b. IF EITHER 8a OR 8b ARE **NOT** TRUE THEN:
      DETERMINE POST TYPE FROM CROSS REFERENCING THE UPLIFT FOOTING AND
      CONSTRAINED FOOTING ON TABLE 1.3
      example: A 40" UPLIFT FOOTING AND A 20" CONSTRAINED FOOTING
      ARE REQUIRED. POST TYPE "F1" IS REQUIRED. TABLE 1.2 SHOWS POST TYPE
      "F1" TO BE A 0.041"X3"X3" STEEL CLOVER POST WITH A MAX HEIGHT OF 11'.
10. IF STRUCTURE IS ATTACHED FIND THE O/C SPACING OR # OF FASTENERS FOR ATTACHING TO
    WALL FROM TABLE 7.6 OR TABLE 7.7
11. USE THE APPROPRIATE DETAILS (L1-L34)

FOR PATIO SLABS FOLLOW 1-7 FROM ABOVE THEN

SLAB 7. USE THE SMALLER OF THE POST SPACING ON SLAB OR HEADER POST SPACING
SLAB 8. BOTH 8a AND 8b MUST BE TRUE
SLAB 9. FOLLOW **9a** FROM ABOVE
SLAB 10. FOLLOW 10 AND 11 FROM ABOVE
SLAB 11. FOR **TWO** POST STRUCTURES USE **TABLE 7.1** ON SHEET **Misc3** FOR SLAB REQUIREMENTS
INSTEAD OF SECTION 2.0

May 27 2017

PROFESSIONAL ENGINEER
CARL PUTNAM
C 68139
EXP. 6/30/2019
CIVIL
STATE OF CALIFORNIA

TABLE 1.1 TRIBUTARY WIDTHS FOR SINGLE SPAN ATTACHED STRUCTURES

OVER-HANG	PROJECTION OF SINGLE SPAN STRUCTURES (FT)																
	6'	7'	8'	9'	10'	11'	12'	13'	14'	15'	16'	17'	18'	19'	20'	21'	22'
0'	3'	3.5'	4'	4.5'	5'	5.5'	6'	6.5'	7'	7.5'	8'	8.5'	9'	9.5'	10'	10.5'	11'
1'	3.5'	4'	4.5'	5'	5.5'	6'	6.5'	7'	7.5'	8'	8.5'	9'	9.5'	10'	10.5'	11'	11.5'
2'	n/a	n/a	n/a	5.5'	6'	6.5'	7'	7.5'	8'	8.5'	9'	9.5'	10'	10.5'	11'	11.5'	12'
3'	n/a	n/a	n/a	n/a	n/a	n/a	n/a	8'	8.5'	9'	9.5'	10'	10.5'	11'	11.5'	12'	12.5'
4'	n/a	n/a	n/a	n/a	n/a	n/a	n/a	n/a	n/a	n/a	n/a	10.5'	11'	11.5'	12'	12.5'	13'
5'	n/a	n/a	n/a	n/a	n/a	n/a	n/a	n/a	n/a	n/a	n/a	n/a	n/a	n/a	n/a	13'	13.5'

Table 1.2

Post Description	Max Hgt	POST Type	Detail
Twin 0.060"x1.5"x1.5" Scroll	10'	A1	AC
0.042"x3"x8" Aluminum Post	12'	A2	L1
0.024"x3"x3"Post with Sideplates	10'	B	L24
Clover 0.030"x3"x3" Alum	11'	C	L11
Clover 0.040"x3"x3" Alum	11'	D	L11
Colonial 0.062" Extruded	11'	E	AE
0.041"x3"x3" Steel Clover	11'	F1	L11
0.041"x3"x3" Steel Clover	10'	F2	L11
0.041"x3"x3" Steel Clover	9'	F3	L11
0.041"x3"x3" Steel Clover	8'	F4	L11
0.041"x3"x3" Steel Clover	7'	F5	L11
1/8"x3"x3" Steel Square	12'	G1	L21
1/8"x3"x3" Steel Square	10'	G2	L21
3/16"x3"x3" Steel Square	12'	H1	L21
3/16"x3"x3" Steel Square	10'	H2	L21
3/16"x4"x4" Steel Square	15'	I1	L21
3/16"x4"x4" Steel Square	12'	I2	L21
3/16"x5"x5" Steel Square	15'	J1	L21
3/16"x6"x6" Steel Square	15'	K1	L21

Table 1.3

Uplift d (in)	Constrained d (in)																																		
	16	17	18	19	20	21	22	23	24	25	26	27	28	29	30	31	32	33	34	35	36	37	38	39	40	41	42	43	44	45	46	47	48	49
14	F1	F1	F1	F1	F1	F1	F1	F1	G1	G1	G1	G1	G1	G1	G1	G1	H1	H1	H2	H2	H2	H2	H2	H2	I2	I2	I2	I2	I2	K1	K1	K1	K1	K1
15	F1	F1	F1	F1	F1	F1	F1	F1	G1	G1	G1	G1	G1	G1	G1	G1	H1	H1	H2	H2	H2	H2	H2	H2	I2	I2	I2	I2	I2	K1	K1	K1	K1	K1
16	F1	F1	F1	F1	F1	F1	F1	F1	G1	G1	G1	G1	G1	G1	G1	G1	H1	H1	H2	H2	H2	H2	H2	H2	I2	I2	I2	I2	I2	K1	K1	K1	K1	K1
17	F1	F1	F1	F1	F1	F1	F1	F1	G1	G1	G1	G1	G1	G1	G1	G2	H1	H1	H2	H2	H2	H2	H2	H2	I2	I2	I2	I2	I2	K1	K1	K1	K1	K1
18	F1	F1	F1	F1	F1	F1	F1	F1	G1	G1	G1	G1	G1	G1	G1	G2	H1	H1	H2	H2	H2	H2	H2	H2	I2	I2	I2	I2	I2	K1	K1	K1	K1	K1
19	F1	F1	F1	F1	F1	F1	F1	F1	G1	G1	G1	G1	G1	G1	G1	H1	H1	H1	H2	H2	H2	H2	H2	H2	I2	I2	I2	I2	I2	K1	K1	K1	K1	K1
20	F1	F1	F1	F1	F1	F1	F1	F1	G1	G1	G1	G1	G1	G1	G1	H1	H1	H1	H2	H2	H2	H2	H2	H2	I2	I2	I2	I2	I2	K1	K1	K1	K1	K1
21	F1	F1	F1	F1	F1	F1	F1	F1	G1	G1	G1	G1	G1	G1	G1	H1	H1	H1	H2	H2	H2	H2	H2	H2	I2	I2	I2	I2	I2	K1	K1	K1	K1	K1
22	F1	F1	F1	F1	F1	F1	F1	F2	G1	G1	G1	G1	G1	G1	G1	H1	H1	H1	H2	H2	H2	H2	H2	H2	I2	I2	I2	I2	I2	K1	K1	K1	K1	K1
23	F1	F1	F1	F1	F1	F1	F1	F2	G1	G1	G1	G1	G1	G1	G1	H1	H1	H1	H2	H2	H2	H2	H2	H2	I2	I2	I2	I2	I2	K1	K1	K1	K1	K1
24	F1	F1	F1	F1	F1	F1	F1	F3	G1	G1	G1	G1	G1	G1	G1	H1	H1	H1	H2	H2	H2	H2	H2	H2	I2	I2	I2	I2	I2	K1	K1	K1	K1	K1
25	F1	F1	F1	F1	F1	F1	F1	F4	G1	G1	G1	G1	G1	G1	G1	H1	H1	H1	H2	H2	H2	H2	H2	H2	I2	I2	I2	I2	I2	K1	K1	K1	K1	K1
26	F1	F1	F1	F1	F1	F1	F1	F5	G1	G1	G1	G1	G1	G1	G1	H1	H1	H1	H2	H2	H2	H2	H2	H2	I2	I2	I2	I2	I2	K1	K1	K1	K1	K1
27	F1	F1	F1	F1	F1	F1	F1	F5	G1	G1	G1	G1	G1	G1	G1	H1	H1	H1	H2	H2	H2	H2	H2	H2	I2	I2	I2	I2	I2	K1	K1	K1	K1	0
28	F1	F1	F1	F1	F1	F1	F1	G1	G1	G1	G1	G1	G1	G1	G1	H1	H1	H1	H2	H2	H2	H2	H2	H2	I2	I2	I2	I2	I2	K1	K1	K1	K1	0
29	F1	F1	F1	F1	F1	F1	F2	G1	G1	G1	G1	G1	G1	G1	G1	H1	H1	H1	H2	H2	H2	H2	H2	H2	I2	I2	I2	I2	I2	K1	K1	K1	K1	0
30	F1	F1	F1	F1	F1	F1	F3	G1	G1	G1	G1	G1	G1	G1	G2	H1	H1	H1	H2	H2	H2	H2	H2	H2	I2	I2	I2	I2	I2	K1	K1	K1	K1	0
31	F1	F1	F1	F1	F1	F1	F3	G1	G1	G1	G1	G1	G1	G1	G2	H1	H1	H1	H2	H2	H2	H2	H2	I1	I2	I2	I2	I2	I2	K1	K1	K1	K1	0
32	F1	F1	F1	F1	F1	F2	F4	G1	G1	G1	G1	G1	G1	G1	G2	H1	H1	H2	H2	H2	H2	H2	H2	I1	I2	I2	I2	I2	I2	K1	K1	K1	K1	0
33	F1	F1	F1	F1	F1	F2	F4	G1	G1	G1	G1	G1	G1	G1	G2	H1	H1	H2	H2	H2	H2	H2	H2	I1	I2	I2	I2	I2	I2	K1	K1	K1	K1	0
34	F1	F1	F1	F1	F1	F3	F5	G1	G1	G1	G1	G1	G1	G1	H1	H1	H1	H2	H2	H2	H2	H2	H2	I1	I2	I2	I2	I2	I2	K1	K1	K1	K1	0
35	F1	F1	F1	F1	F2	F3	G1	G1	G1	G1	G1	G1	G1	G1	H1	H1	H1	H2	H2	H2	H2	H2	H2	I2	I2	I2	I2	I2	I2	K1	K1	K1	K1	0
36	F1	F1	F1	F1	F2	F4	G1	G1	G1	G1	G1	G1	G1	G2	H1	H1	H1	H2	H2	H2	H2	H2	H2	I2	I2	I2	I2	I2	I2	K1	K1	K1	K1	0
37	F1	F1	F1	F2	F3	F4	G1	G1	G1	G1	G1	G1	G1	G2	H1	H1	H1	H2	H2	H2	H2	H2	H2	I2	I2	I2	I2	I2	J1	K1	K1	K1	K1	0
38	F1	F1	F1	F2	F3	F5	G1	G1	G1	G1	G1	G1	G1	G2	H1	H1	H1	H2	H2	H2	H2	H2	H2	I2	I2	I2	I2	I2	J1	K1	K1	K1	K1	0
39	F1	F1	F2	F3	F4	F5	G1	G1	G1	G1	G1	G1	G1	G2	H1	H1	H2	H2	H2	H2	H2	H2	H2	I2	I2	I2	I2	I2	J1	K1	K1	K1	K1	0
40	F1	F2	F2	F3	F4	G1	G1	G1	G1	G1	G1	G1	G2	G2	H1	H1	H2	H2	H2	H2	H2	H2	I1	I2	I2	I2	I2	I2	J1	K1	K1	K1	K1	0
41	F2	F2	F3	F3	F4	G1	G1	G1	G1	G1	G1	G1	G2	H1	H1	H1	H2	H2	H2	H2	H2	H2	I1	I2	I2	I2	I2	I2	K1	K1	K1	K1	K1	0
42	F2	F3	F3	F4	F5	G1	G1	G1	G1	G1	G1	G1	G2	H1	H1	H1	H2	H2	H2	H2	H2	H2	I1	I2	I2	I2	I2	I2	K1	K1	K1	K1	K1	0
43	F3	F3	F3	F4	F5	G1	G1	G1	G1	G1	G1	G2	G2	H1	H1	H1	H2	H2	H2	H2	H2	H2	I1	I2	I2	I2	I2	I2	K1	K1	K1	K1	K1	0
44	F3	F3	F4	F5	G1	G1	G1	G1	G1	G1	G1	G2	G2	H1	H1	H2	H2	H2	H2	H2	H2	H2	I1	I2	I2	I2	I2	I2	K1	K1	K1	K1	K1	0
45	F3	F4	F4	F5	G1	G1	G1	G1	G1	G1	G1	G2	H1	H1	H1	H2	H2	H2	H2	H2	H2	H2	I1	I2	I2	I2	I2	I2	K1	K1	K1	K1	K1	0
46	F4	F4	F5	G1	G1	G1	G1	G1	G1	G1	G2	G2	H1	H1	H1	H2	H2	H2	H2	H2	H2	H2	I1	I2	I2	I2	I2	I2	K1	K1	K1	K1	K1	0
47	F4	F5	F5	G1	G1	G1	G1	G1	G1	G1	G2	G2	H1	H1	H1	H2	H2	H2	H2	H2	H2	I1	I2	I2	I2	I2	I2	I2	K1	K1	K1	K1	K1	0
48	F5	F5	G1	G1	G1	G1	G1	G1	G1	G2	G2	G2	H1	H1	H2	H2	H2	H2	H2	H2	H2	I1	I2	I2	I2	I2	I2	I2	K1	K1	K1	K1	K1	0
49	F5	G1	G1	G1	G1	G1	G1	G1	G2	G2	G2	H1	H1	H1	H2	H2	H2	H2	H2	H2	H2	I1	I2	I2	I2	I2	I2	J1	K1	K1	K1	K1	0	0
50	F5	G1	G1	G1	G1	G1	G1	G1	G2	G2	G2	H1	H1	H1	H2	H2	H2	H2	H2	H2	H2	I1	I2	I2	I2	I2	I2	J1	K1	K1	K1	K1	0	0
51	G1	G1	G1	G1	G1	G1	G1	G2	G2	G2	H1	H1	H1	H2	H2	H2	H2	H2	H2	H2	I1	I1	I2	I2	I2	I2	I2	J1	K1	K1	K1	K1	0	0
52	G1	G1	G1	G1	G1	G1	G2	G2	G2	G2	H1	H1	H1	H2	H2	H2	H2	H2	H2	H2	I1	I1	I2	I2	I2	I2	I2	J1	K1	K1	K1	K1	0	0

SECTION 1.0 RAFTER SPANS FOR COMMERCIAL AND PATIO STRUCTURES

0.024"x2"x6.625" Rafter (Single Span)

Ground Snow Load (psf)	Rafter Spacing (in)	Wind Speed and Exposure: Exp B 120	130	140	Exp C 110	115	120
10 LIVE	24"	8'-9"	8'-9"	8'-9"	8'-9"	8'-9"	8'-9"
	20"	10'-6"	10'-6"	10'-3"	10'-6"	10'-6"	10'-1"
	16"	13'-0"	12'-9"	11'-7"	12'-9"	12'-0"	11'-5"
	12"	15'-1"	14'-10"	13'-7"	14'-9"	14'-0"	13'-4"
		Exposure C 130	140	150	160	170	180
10 LIVE	24"	8'-1"	7'-4"	6'-7"	6'-0"	5'-5"	5'-0"
	20"	9'-1"	8'-2"	7'-5"	6'-9"	6'-2"	5'-8"
	16"	10'-4"	9'-5"	8'-7"	7'-10"	7'-2"	6'-7"
	12"	12'-1"	11'-0"	9'-8"	8'-6"	7'-7"	6'-9"
20 LIVE	24"	4'-5"	4'-5"	4'-5"	4'-5"	4'-5"	4'-5"
	20"	5'-3"	5'-3"	5'-3"	5'-3"	5'-3"	5'-3"
	16"	6'-7"	6'-7"	6'-7"	6'-7"	6'-7"	6'-7"
	12"	8'-9"	8'-9"	8'-9"	8'-6"	7'-7"	6'-9"
25	24"	4'-2"	4'-2"	4'-2"	4'-2"	4'-2"	4'-2"
	20"	5'-0"	5'-0"	5'-0"	5'-0"	5'-0"	5'-0"
	16"	6'-3"	6'-3"	6'-3"	6'-3"	6'-3"	6'-3"
	12"	8'-4"	8'-4"	8'-4"	8'-4"	7'-7"	6'-9"
30	24"	3'-6"	3'-6"	3'-6"	3'-6"	3'-6"	3'-6"
	20"	4'-2"	4'-2"	4'-2"	4'-2"	4'-2"	4'-2"
	16"	5'-3"	5'-3"	5'-3"	5'-3"	5'-3"	5'-3"
	12"	7'-0"	7'-0"	7'-0"	7'-0"	7'-0"	6'-9"
36	24"	2'-11"	2'-11"	2'-11"	2'-11"	2'-11"	2'-11"
	20"	3'-6"	3'-6"	3'-6"	3'-6"	3'-6"	3'-6"
	16"	4'-5"	4'-5"	4'-5"	4'-5"	4'-5"	4'-5"
	12"	5'-11"	5'-11"	5'-11"	5'-11"	5'-11"	5'-11"
42	24"	2'-6"	2'-6"	2'-6"	2'-6"	2'-6"	2'-6"
	20"	3'-0"	3'-0"	3'-0"	3'-0"	3'-0"	3'-0"
	16"	3'-9"	3'-9"	3'-9"	3'-9"	3'-9"	3'-9"
	12"	5'-0"	5'-0"	5'-0"	5'-0"	5'-0"	5'-0"
50	24"	2'-1"	2'-1"	2'-1"	2'-1"	2'-1"	2'-1"
	20"	2'-6"	2'-6"	2'-6"	2'-6"	2'-6"	2'-6"
	16"	3'-2"	3'-2"	3'-2"	3'-2"	3'-2"	3'-2"
	12"	4'-2"	4'-2"	4'-2"	4'-2"	4'-2"	4'-2"
60	24"	1'-9"	1'-9"	1'-9"	1'-9"	1'-9"	1'-9"
	20"	2'-1"	2'-1"	2'-1"	2'-1"	2'-1"	2'-1"
	16"	2'-7"	2'-7"	2'-7"	2'-7"	2'-7"	2'-7"
	12"	3'-6"	3'-6"	3'-6"	3'-6"	3'-6"	3'-6"

TABLE 1.4

0.032"x2"x6.625" Rafter (Single Span)

Ground Snow Load (psf)	Rafter Spacing (in)	Wind Speed and Exposure: Exp B 120	130	140	Exp C 110	115	120
10 LIVE	24"	14'-10"	14'-10"	13'-9"	14'-10"	14'-3"	13'-7"
	20"	16'-2"	16'-2"	15'-1"	16'-2"	15'-7"	14'-11"
	16"	18'-0"	18'-0"	16'-11"	18'-0"	17'-5"	16'-8"
	12"	20'-8"	20'-8"	19'-5"	20'-8"	20'-0"	19'-1"
		Exposure C 130	140	150	160	170	180
10 LIVE	24"	12'-5"	11'-4"	10'-6"	9'-9"	9'-0"	8'-5"
	20"	13'-7"	12'-6"	11'-7"	10'-9"	10'-0"	9'-4"
	16"	15'-3"	14'-0"	13'-0"	12'-1"	11'-3"	10'-6"
	12"	17'-6"	16'-1"	14'-11"	13'-11"	13'-0"	12'-2"
20 LIVE	24"	7'-7"	7'-7"	7'-7"	7'-7"	7'-7"	7'-7"
	20"	9'-1"	9'-1"	9'-1"	9'-1"	9'-1"	9'-1"
	16"	11'-3"	11'-3"	11'-3"	11'-3"	11'-3"	10'-6"
	12"	14'-10"	14'-10"	14'-10"	13'-11"	13'-0"	12'-2"
25	24"	7'-3"	7'-3"	7'-3"	7'-3"	7'-3"	7'-3"
	20"	8'-8"	8'-8"	8'-8"	8'-8"	8'-8"	8'-8"
	16"	10'-9"	10'-9"	10'-9"	10'-9"	10'-9"	10'-6"
	12"	14'-3"	14'-3"	14'-3"	13'-11"	13'-0"	12'-2"
30	24"	6'-0"	6'-0"	6'-0"	6'-0"	6'-0"	6'-0"
	20"	7'-3"	7'-3"	7'-3"	7'-3"	7'-3"	7'-3"
	16"	9'-0"	9'-0"	9'-0"	9'-0"	9'-0"	9'-0"
	12"	11'-11"	11'-11"	11'-11"	11'-11"	11'-11"	11'-11"
36	24"	5'-1"	5'-1"	5'-1"	5'-1"	5'-1"	5'-1"
	20"	6'-1"	6'-1"	6'-1"	6'-1"	6'-1"	6'-1"
	16"	7'-7"	7'-7"	7'-7"	7'-7"	7'-7"	7'-7"
	12"	10'-1"	10'-1"	10'-1"	10'-1"	10'-1"	10'-1"
42	24"	4'-4"	4'-4"	4'-4"	4'-4"	4'-4"	4'-4"
	20"	5'-2"	5'-2"	5'-2"	5'-2"	5'-2"	5'-2"
	16"	6'-5"	6'-5"	6'-5"	6'-5"	6'-5"	6'-5"
	12"	8'-7"	8'-7"	8'-7"	8'-7"	8'-7"	8'-7"
50	24"	3'-7"	3'-7"	3'-7"	3'-7"	3'-7"	3'-7"
	20"	4'-4"	4'-4"	4'-4"	4'-4"	4'-4"	4'-4"
	16"	5'-5"	5'-5"	5'-5"	5'-5"	5'-5"	5'-5"
	12"	7'-3"	7'-3"	7'-3"	7'-3"	7'-3"	7'-3"
60	24"	3'-0"	3'-0"	3'-0"	3'-0"	3'-0"	3'-0"
	20"	3'-7"	3'-7"	3'-7"	3'-7"	3'-7"	3'-7"
	16"	4'-6"	4'-6"	4'-6"	4'-6"	4'-6"	4'-6"
	12"	6'-0"	6'-0"	6'-0"	6'-0"	6'-0"	6'-0"

TABLE 1.5

0.040"x2"x6.625" Rafter (Single Span)

Ground Snow Load (psf)	Rafter Spacing (in)	Wind Speed and Exposure: Exp B 120	130	140	Exp C 110	115	120
10 LIVE	24"	18'-4"	18'-4"	17'-11"	18'-4"	18'-4"	17'-8"
	20"	20'-0"	20'-0"	19'-3"	20'-0"	19'-7"	19'-0"
	16"	22'-3"	21'-8"	20'-7"	21'-8"	21'-0"	20'-5"
	12"	25'-1"	23'-8"	22'-6"	23'-8"	22'-11"	22'-3"
		Exposure C 130	140	150	160	170	180
10 LIVE	24"	16'-3"	15'-0"	13'-11"	12'-11"	12'-1"	11'-5"
	20"	17'-9"	16'-5"	15'-3"	14'-2"	13'-3"	12'-6"
	16"	19'-4"	18'-3"	16'-11"	15'-10"	14'-10"	13'-11"
	12"	21'-1"	20'-0"	19'-1"	18'-1"	16'-11"	15'-11"
20 LIVE	24"	11'-5"	11'-5"	11'-5"	11'-5"	11'-5"	11'-5"
	20"	13'-8"	13'-8"	13'-8"	13'-8"	13'-3"	12'-6"
	16"	15'-11"	15'-11"	15'-11"	15'-10"	14'-10"	13'-11"
	12"	18'-4"	18'-4"	18'-4"	18'-1"	16'-11"	15'-11"
25	24"	10'-11"	10'-11"	10'-11"	10'-11"	10'-11"	10'-11"
	20"	13'-0"	13'-0"	13'-0"	13'-0"	13'-0"	12'-6"
	16"	15'-7"	15'-7"	15'-7"	15'-7"	14'-10"	13'-11"
	12"	17'-11"	17'-11"	17'-11"	17'-11"	16'-11"	15'-11"
30	24"	9'-1"	9'-1"	9'-1"	9'-1"	9'-1"	9'-1"
	20"	10'-11"	10'-11"	10'-11"	10'-11"	10'-11"	10'-11"
	16"	13'-6"	13'-6"	13'-6"	13'-6"	13'-6"	13'-6"
	12"	16'-5"	16'-5"	16'-5"	16'-5"	16'-5"	15'-11"
36	24"	7'-8"	7'-8"	7'-8"	7'-8"	7'-8"	7'-8"
	20"	9'-2"	9'-2"	9'-2"	9'-2"	9'-2"	9'-2"
	16"	11'-5"	11'-5"	11'-5"	11'-5"	11'-5"	11'-5"
	12"	15'-1"	15'-1"	15'-1"	15'-1"	15'-1"	15'-1"
42	24"	6'-6"	6'-6"	6'-6"	6'-6"	6'-6"	6'-6"
	20"	7'-10"	7'-10"	7'-10"	7'-10"	7'-10"	7'-10"
	16"	9'-9"	9'-9"	9'-9"	9'-9"	9'-9"	9'-9"
	12"	12'-11"	12'-11"	12'-11"	12'-11"	12'-11"	12'-11"
50	24"	5'-6"	5'-6"	5'-6"	5'-6"	5'-6"	5'-6"
	20"	6'-7"	6'-7"	6'-7"	6'-7"	6'-7"	6'-7"
	16"	8'-2"	8'-2"	8'-2"	8'-2"	8'-2"	8'-2"
	12"	10'-11"	10'-11"	10'-11"	10'-11"	10'-11"	10'-11"
60	24"	4'-7"	4'-7"	4'-7"	4'-7"	4'-7"	4'-7"
	20"	5'-6"	5'-6"	5'-6"	5'-6"	5'-6"	5'-6"
	16"	6'-10"	6'-10"	6'-10"	6'-10"	6'-10"	6'-10"
	12"	9'-1"	9'-1"	9'-1"	9'-1"	9'-1"	9'-1"

TABLE 1.6

0.042"x3"x8" Rafter (Single Span)

Ground Snow Load (psf)	Rafter Spacing (in)	Wind Speed and Exposure: Exp B 120	130	140	Exp C 110	115	120
10 LIVE	36"	16'-5"	16'-5"	16'-3"	16'-5"	16'-5"	16'-0"
	32"	18'-4"	18'-4"	17'-3"	18'-4"	17'-10"	17'-0"
	24"	21'-1"	21'-1"	19'-11"	21'-1"	20'-7"	19'-7"
	16"	25'-6"	25'-6"	24'-2"	25'-6"	24'-11"	23'-9"
		Exposure C 130	140	150	160	170	180
10 LIVE	36"	14'-8"	13'-6"	12'-5"	11'-6"	10'-9"	10'-0"
	32"	15'-7"	14'-4"	13'-3"	12'-3"	11'-5"	10'-8"
	24"	18'-0"	16'-7"	15'-4"	14'-3"	13'-4"	12'-5"
	16"	21'-10"	20'-1"	18'-8"	17'-4"	16'-3"	15'-3"
20 LIVE	36"	8'-4"	8'-4"	8'-4"	8'-4"	8'-4"	8'-4"
	32"	9'-4"	9'-4"	9'-4"	9'-4"	9'-4"	9'-4"
	24"	12'-5"	12'-5"	12'-5"	12'-5"	12'-5"	12'-5"
	16"	18'-4"	18'-4"	18'-4"	17'-4"	16'-3"	15'-3"
25	36"	7'-11"	7'-11"	7'-11"	7'-11"	7'-11"	7'-11"
	32"	8'-11"	8'-11"	8'-11"	8'-11"	8'-11"	8'-11"
	24"	11'-10"	11'-10"	11'-10"	11'-10"	11'-10"	11'-10"
	16"	17'-6"	17'-6"	17'-6"	17'-4"	16'-3"	15'-3"
30	36"	6'-7"	6'-7"	6'-7"	6'-7"	6'-7"	6'-7"
	32"	7'-5"	7'-5"	7'-5"	7'-5"	7'-5"	7'-5"
	24"	9'-11"	9'-11"	9'-11"	9'-11"	9'-11"	9'-11"
	16"	14'-8"	14'-8"	14'-8"	14'-8"	14'-8"	14'-8"
36	36"	5'-7"	5'-7"	5'-7"	5'-7"	5'-7"	5'-7"
	32"	6'-3"	6'-3"	6'-3"	6'-3"	6'-3"	6'-3"
	24"	8'-4"	8'-4"	8'-4"	8'-4"	8'-4"	8'-4"
	16"	12'-5"	12'-5"	12'-5"	12'-5"	12'-5"	12'-5"
42	36"	4'-9"	4'-9"	4'-9"	4'-9"	4'-9"	4'-9"
	32"	5'-4"	5'-4"	5'-4"	5'-4"	5'-4"	5'-4"
	24"	7'-1"	7'-1"	7'-1"	7'-1"	7'-1"	7'-1"
	16"	10'-7"	10'-7"	10'-7"	10'-7"	10'-7"	10'-7"
50	36"	4'-0"	4'-0"	4'-0"	4'-0"	4'-0"	4'-0"
	32"	4'-6"	4'-6"	4'-6"	4'-6"	4'-6"	4'-6"
	24"	6'-0"	6'-0"	6'-0"	6'-0"	6'-0"	6'-0"
	16"	8'-11"	8'-11"	8'-11"	8'-11"	8'-11"	8'-11"
60	36"	3'-4"	3'-4"	3'-4"	3'-4"	3'-4"	3'-4"
	32"	3'-9"	3'-9"	3'-9"	3'-9"	3'-9"	3'-9"
	24"	5'-0"	5'-0"	5'-0"	5'-0"	5'-0"	5'-0"
	16"	7'-5"	7'-5"	7'-5"	7'-5"	7'-5"	7'-5"

TABLE 1.7

3"x3" Rafter @6" o/c (Multispan or Single)

Ground Snow Load (psf)	Rafter Gauge (in)	Wind Speed and Exposure, Exposure C: 130	140	150	160	170	180
10 LIVE	0.024"	12'-6"	12'-6"	11'-9"	11'-0"	10'-4"	9'-9"
	0.040"	16'-4"	15'-6"	14'-9"	14'-1"	13'-6"	13'-0"
20 LIVE	0.024"	8'-6"	8'-6"	8'-6"	8'-6"	8'-6"	8'-6"
	0.040"	15'-0"	15'-0"	14'-9"	14'-1"	13'-6"	13'-0"
25	0.024"	8'-3"	8'-3"	8'-3"	8'-3"	8'-3"	8'-3"
	0.040"	14'-7"	14'-7"	14'-7"	14'-1"	13'-6"	13'-0"
30	0.024"	7'-5"	7'-5"	7'-5"	7'-5"	7'-5"	7'-5"
	0.040"	13'-3"	13'-3"	13'-3"	13'-3"	13'-3"	13'-0"
36	0.024"	6'-7"	6'-7"	6'-7"	6'-7"	6'-7"	6'-7"
	0.040"	12'-0"	12'-0"	12'-0"	12'-0"	12'-0"	12'-0"
42	0.024"	6'-0"	6'-0"	6'-0"	6'-0"	6'-0"	6'-0"
	0.040"	11'-0"	11'-0"	11'-0"	11'-0"	11'-0"	11'-0"
50	0.024"	5'-4"	5'-4"	5'-4"	5'-4"	5'-4"	5'-4"
	0.040"	9'-11"	9'-11"	9'-11"	9'-11"	9'-11"	9'-11"
60	0.024"	4'-8"	4'-8"	4'-8"	4'-8"	4'-8"	4'-8"
	0.040"	8'-11"	8'-11"	8'-11"	8'-11"	8'-11"	8'-11"

TABLE 1.8

Amerimax Exterior Home Products
28921 US Hwy 74
Romoland, CA 92585

Carl Putnam, P. E.
3441 Ivylink Place
Lynchburg, VA 24503
carlputnam@comcast.net

NOTE: RAFTERS MAY OVERHANG 25% OF THEIR CLEARSPAN

0.024"x2"x6.625" Rafter (Multispan)

Ground Snow Load	Rafter Spacing	Wind Speed and Exposure, Exposure C: 130	140	150	160	170	180
10 LIVE	24"	6'-10"	6'-10"	6'-7"	6'-0"	5'-5"	5'-0"
	20"	7'-10"	7'-10"	7'-5"	6'-9"	6'-2"	5'-8"
	16"	9'-3"	9'-3"	8'-7"	7'-10"	7'-2"	6'-7"
	12"	11'-2"	11'-0"	9'-8"	8'-6"	7'-7"	6'-9"
20 LIVE	24"	3'-11"	3'-11"	3'-11"	3'-11"	3'-11"	3'-11"
	20"	4'-6"	4'-6"	4'-6"	4'-6"	4'-6"	4'-6"
	16"	5'-6"	5'-6"	5'-6"	5'-6"	5'-6"	5'-6"
	12"	6'-10"	6'-10"	6'-10"	6'-10"	6'-10"	6'-9"
25	24"	3'-9"	3'-9"	3'-9"	3'-9"	3'-9"	3'-9"
	20"	4'-4"	4'-4"	4'-4"	4'-4"	4'-4"	4'-4"
	16"	5'-3"	5'-3"	5'-3"	5'-3"	5'-3"	5'-3"
	12"	6'-7"	6'-7"	6'-7"	6'-7"	6'-7"	6'-7"
30	24"	3'-2"	3'-2"	3'-2"	3'-2"	3'-2"	3'-2"
	20"	3'-9"	3'-9"	3'-9"	3'-9"	3'-9"	3'-9"
	16"	4'-6"	4'-6"	4'-6"	4'-6"	4'-6"	4'-6"
	12"	5'-9"	5'-9"	5'-9"	5'-9"	5'-9"	5'-9"
36	24"	2'-8"	2'-8"	2'-8"	2'-8"	2'-8"	2'-8"
	20"	3'-2"	3'-2"	3'-2"	3'-2"	3'-2"	3'-2"
	16"	3'-11"	3'-11"	3'-11"	3'-11"	3'-11"	3'-11"
	12"	5'-0"	5'-0"	5'-0"	5'-0"	5'-0"	5'-0"
42	24"	2'-4"	2'-4"	2'-4"	2'-4"	2'-4"	2'-4"
	20"	2'-9"	2'-9"	2'-9"	2'-9"	2'-9"	2'-9"
	16"	3'-4"	3'-4"	3'-4"	3'-4"	3'-4"	3'-4"
	12"	4'-4"	4'-4"	4'-4"	4'-4"	4'-4"	4'-4"
50	24"	2'-0"	2'-0"	2'-0"	2'-0"	2'-0"	2'-0"
	20"	2'-4"	2'-4"	2'-4"	2'-4"	2'-4"	2'-4"
	16"	2'-10"	2'-10"	2'-10"	2'-10"	2'-10"	2'-10"
	12"	3'-9"	3'-9"	3'-9"	3'-9"	3'-9"	3'-9"
60	24"	1'-8"	1'-8"	1'-8"	1'-8"	1'-8"	1'-8"
	20"	2'-0"	2'-0"	2'-0"	2'-0"	2'-0"	2'-0"
	16"	2'-5"	2'-5"	2'-5"	2'-5"	2'-5"	2'-5"
	12"	3'-2"	3'-2"	3'-2"	3'-2"	3'-2"	3'-2"

TABLE 1.9

0.032"x2"x6.625" Rafter (Multispan)

Ground Snow Load	Rafter Spacing	Wind Speed and Exposure, Exposure C: 130	140	150	160	170	180
10 LIVE	24"	10'-4"	10'-4"	10'-4"	9'-9"	9'-0"	8'-5"
	20"	11'-8"	11'-8"	11'-7"	10'-9"	10'-0"	9'-4"
	16"	13'-6"	13'-6"	13'-0"	12'-1"	11'-3"	10'-6"
	12"	16'-2"	16'-1"	14'-11"	13'-11"	13'-0"	12'-2"
20 LIVE	24"	6'-2"	6'-2"	6'-2"	6'-2"	6'-2"	6'-2"
	20"	7'-1"	7'-1"	7'-1"	7'-1"	7'-1"	7'-1"
	16"	8'-5"	8'-5"	8'-5"	8'-5"	8'-5"	8'-5"
	12"	10'-4"	10'-4"	10'-4"	10'-4"	10'-4"	10'-4"
25	24"	5'-11"	5'-11"	5'-11"	5'-11"	5'-11"	5'-11"
	20"	6'-10"	6'-10"	6'-10"	6'-10"	6'-10"	6'-10"
	16"	8'-1"	8'-1"	8'-1"	8'-1"	8'-1"	8'-1"
	12"	10'-0"	10'-0"	10'-0"	10'-0"	10'-0"	10'-0"
30	24"	5'-1"	5'-1"	5'-1"	5'-1"	5'-1"	5'-1"
	20"	5'-11"	5'-11"	5'-11"	5'-11"	5'-11"	5'-11"
	16"	7'-1"	7'-1"	7'-1"	7'-1"	7'-1"	7'-1"
	12"	8'-9"	8'-9"	8'-9"	8'-9"	8'-9"	8'-9"
36	24"	4'-5"	4'-5"	4'-5"	4'-5"	4'-5"	4'-5"
	20"	5'-2"	5'-2"	5'-2"	5'-2"	5'-2"	5'-2"
	16"	6'-2"	6'-2"	6'-2"	6'-2"	6'-2"	6'-2"
	12"	7'-9"	7'-9"	7'-9"	7'-9"	7'-9"	7'-9"
42	24"	3'-10"	3'-10"	3'-10"	3'-10"	3'-10"	3'-10"
	20"	4'-6"	4'-6"	4'-6"	4'-6"	4'-6"	4'-6"
	16"	5'-5"	5'-5"	5'-5"	5'-5"	5'-5"	5'-5"
	12"	6'-10"	6'-10"	6'-10"	6'-10"	6'-10"	6'-10"
50	24"	3'-3"	3'-3"	3'-3"	3'-3"	3'-3"	3'-3"
	20"	3'-10"	3'-10"	3'-10"	3'-10"	3'-10"	3'-10"
	16"	4'-8"	4'-8"	4'-8"	4'-8"	4'-8"	4'-8"
	12"	5'-11"	5'-11"	5'-11"	5'-11"	5'-11"	5'-11"
60	24"	2'-9"	2'-9"	2'-9"	2'-9"	2'-9"	2'-9"
	20"	3'-3"	3'-3"	3'-3"	3'-3"	3'-3"	3'-3"
	16"	4'-0"	4'-0"	4'-0"	4'-0"	4'-0"	4'-0"
	12"	5'-1"	5'-1"	5'-1"	5'-1"	5'-1"	5'-1"

TABLE 1.10

0.040"x2"x6.625" Rafter (Multispan)

Ground Snow Load	Rafter Spacing	Wind Speed and Exposure, Exposure C: 130	140	150	160	170	180
10 LIVE	24"	13'-11"	13'-11"	13'-11"	12'-11"	12'-1"	11'-5"
	20"	15'-7"	15'-7"	15'-3"	14'-2"	13'-3"	12'-6"
	16"	17'-10"	17'-10"	16'-11"	15'-10"	14'-10"	13'-11"
	12"	21'-1"	20'-0"	19'-1"	18'-1"	16'-11"	15'-11"
20 LIVE	24"	8'-7"	8'-7"	8'-7"	8'-7"	8'-7"	8'-7"
	20"	9'-10"	9'-10"	9'-10"	9'-10"	9'-10"	9'-10"
	16"	11'-6"	11'-6"	11'-6"	11'-6"	11'-6"	11'-6"
	12"	13'-11"	13'-11"	13'-11"	13'-11"	13'-11"	13'-11"
25	24"	8'-3"	8'-3"	8'-3"	8'-3"	8'-3"	8'-3"
	20"	9'-6"	9'-6"	9'-6"	9'-6"	9'-6"	9'-6"
	16"	11'-1"	11'-1"	11'-1"	11'-1"	11'-1"	11'-1"
	12"	13'-6"	13'-6"	13'-6"	13'-6"	13'-6"	13'-6"
30	24"	7'-3"	7'-3"	7'-3"	7'-3"	7'-3"	7'-3"
	20"	8'-3"	8'-3"	8'-3"	8'-3"	8'-3"	8'-3"
	16"	9'-9"	9'-9"	9'-9"	9'-9"	9'-9"	9'-9"
	12"	11'-11"	11'-11"	11'-11"	11'-11"	11'-11"	11'-11"
36	24"	6'-3"	6'-3"	6'-3"	6'-3"	6'-3"	6'-3"
	20"	7'-3"	7'-3"	7'-3"	7'-3"	7'-3"	7'-3"
	16"	8'-7"	8'-7"	8'-7"	8'-7"	8'-7"	8'-7"
	12"	10'-7"	10'-7"	10'-7"	10'-7"	10'-7"	10'-7"
42	24"	5'-6"	5'-6"	5'-6"	5'-6"	5'-6"	5'-6"
	20"	6'-5"	6'-5"	6'-5"	6'-5"	6'-5"	6'-5"
	16"	7'-7"	7'-7"	7'-7"	7'-7"	7'-7"	7'-7"
	12"	9'-5"	9'-5"	9'-5"	9'-5"	9'-5"	9'-5"
50	24"	4'-9"	4'-9"	4'-9"	4'-9"	4'-9"	4'-9"
	20"	5'-6"	5'-6"	5'-6"	5'-6"	5'-6"	5'-6"
	16"	6'-8"	6'-8"	6'-8"	6'-8"	6'-8"	6'-8"
	12"	8'-3"	8'-3"	8'-3"	8'-3"	8'-3"	8'-3"
60	24"	4'-0"	4'-0"	4'-0"	4'-0"	4'-0"	4'-0"
	20"	4'-9"	4'-9"	4'-9"	4'-9"	4'-9"	4'-9"
	16"	5'-9"	5'-9"	5'-9"	5'-9"	5'-9"	5'-9"
	12"	7'-3"	7'-3"	7'-3"	7'-3"	7'-3"	7'-3"

TABLE 1.11

0.042"x3"x8" Rafter (Multispan)

Ground Snow Load	Rafter Spacing	Wind Speed and Exposure, Exposure C: 130	140	150	160	170	180
10 LIVE	36"	11'-9"	11'-9"	11'-9"	11'-6"	10'-9"	10'-0"
	32"	12'-9"	12'-9"	12'-9"	12'-3"	11'-5"	10'-8"
	24"	15'-6"	15'-6"	15'-4"	14'-3"	13'-4"	12'-5"
	16"	19'-10"	19'-10"	18'-8"	17'-4"	16'-3"	15'-3"
20 LIVE	36"	6'-11"	6'-11"	6'-11"	6'-11"	6'-11"	6'-11"
	32"	7'-8"	7'-8"	7'-8"	7'-8"	7'-8"	7'-8"
	24"	9'-6"	9'-6"	9'-6"	9'-6"	9'-6"	9'-6"
	16"	12'-9"	12'-9"	12'-9"	12'-9"	12'-9"	12'-9"
25	36"	6'-8"	6'-8"	6'-8"	6'-8"	6'-8"	6'-8"
	32"	7'-4"	7'-4"	7'-4"	7'-4"	7'-4"	7'-4"
	24"	9'-2"	9'-2"	9'-2"	9'-2"	9'-2"	9'-2"
	16"	12'-4"	12'-4"	12'-4"	12'-4"	12'-4"	12'-4"
30	36"	5'-9"	5'-9"	5'-9"	5'-9"	5'-9"	5'-9"
	32"	6'-4"	6'-4"	6'-4"	6'-4"	6'-4"	6'-4"
	24"	8'-0"	8'-0"	8'-0"	8'-0"	8'-0"	8'-0"
	16"	10'-10"	10'-10"	10'-10"	10'-10"	10'-10"	10'-10"
36	36"	4'-11"	4'-11"	4'-11"	4'-11"	4'-11"	4'-11"
	32"	5'-6"	5'-6"	5'-6"	5'-6"	5'-6"	5'-6"
	24"	6'-11"	6'-11"	6'-11"	6'-11"	6'-11"	6'-11"
	16"	9'-6"	9'-6"	9'-6"	9'-6"	9'-6"	9'-6"
42	36"	4'-3"	4'-3"	4'-3"	4'-3"	4'-3"	4'-3"
	32"	4'-9"	4'-9"	4'-9"	4'-9"	4'-9"	4'-9"
	24"	6'-1"	6'-1"	6'-1"	6'-1"	6'-1"	6'-1"
	16"	8'-5"	8'-5"	8'-5"	8'-5"	8'-5"	8'-5"
50	36"	3'-8"	3'-8"	3'-8"	3'-8"	3'-8"	3'-8"
	32"	4'-1"	4'-1"	4'-1"	4'-1"	4'-1"	4'-1"
	24"	5'-3"	5'-3"	5'-3"	5'-3"	5'-3"	5'-3"
	16"	7'-4"	7'-4"	7'-4"	7'-4"	7'-4"	7'-4"
60	36"	3'-1"	3'-1"	3'-1"	3'-1"	3'-1"	3'-1"
	32"	3'-5"	3'-5"	3'-5"	3'-5"	3'-5"	3'-5"
	24"	4'-6"	4'-6"	4'-6"	4'-6"	4'-6"	4'-6"
	16"	6'-4"	6'-4"	6'-4"	6'-4"	6'-4"	6'-4"

TABLE 1.12

May 27 2017

SECTION 1.0 RAFTER SPANS FOR COMMERCIAL AND PATIO STRUCTURES USING DETAILS L31, L32 OR L33 OR DOUBLE RHEADERS

0.024"x2"x6.625" Rafter (Single Span)

Ground Snow Load (psf)	Rafter Spacing (in)	Wind Speed and Exposure: Exp B 120	130	140	Exp C 110	115	120
10 LIVE	48"	10'-9"	10'-1"	9'-2"	10'-1"	9'-6"	9'-0"
	40"	11'-9"	11'-3"	10'-3"	11'-3"	10'-7"	10'-1"
	32"	13'-2"	12'-9"	11'-7"	12'-9"	12'-0"	11'-5"
	24"	15'-1"	14'-10"	13'-7"	14'-9"	14'-0"	13'-4"
		Exposure C 130	140	150	160	170	180
10 LIVE	48"	8'-1"	7'-4"	6'-7"	6'-0"	5'-5"	5'-0"
	40"	9'-1"	8'-2"	7'-5"	6'-9"	6'-2"	5'-8"
	32"	10'-4"	9'-5"	8'-7"	7'-10"	7'-2"	6'-7"
	24"	12'-1"	11'-0"	9'-8"	8'-6"	7'-7"	6'-9"
20 LIVE	48"	6'-6"	6'-6"	6'-6"	6'-0"	5'-5"	5'-0"
	40"	7'-10"	7'-10"	7'-5"	6'-9"	6'-2"	5'-8"
	32"	9'-4"	9'-4"	8'-7"	7'-10"	7'-2"	6'-7"
	24"	10'-9"	10'-9"	9'-8"	8'-6"	7'-7"	6'-9"
25	48"	6'-3"	6'-3"	6'-3"	6'-0"	5'-5"	5'-0"
	40"	7'-5"	7'-5"	7'-5"	6'-9"	6'-2"	5'-8"
	32"	9'-2"	9'-2"	8'-7"	7'-10"	7'-2"	6'-7"
	24"	10'-6"	10'-6"	9'-8"	8'-6"	7'-7"	6'-9"
30	48"	5'-2"	5'-2"	5'-2"	5'-2"	5'-2"	5'-0"
	40"	6'-3"	6'-3"	6'-3"	6'-3"	6'-2"	5'-8"
	32"	7'-9"	7'-9"	7'-9"	7'-9"	7'-2"	6'-7"
	24"	9'-8"	9'-8"	9'-8"	8'-6"	7'-7"	6'-9"
36	48"	4'-4"	4'-4"	4'-4"	4'-4"	4'-4"	4'-4"
	40"	5'-3"	5'-3"	5'-3"	5'-3"	5'-3"	5'-3"
	32"	6'-6"	6'-6"	6'-6"	6'-6"	6'-6"	6'-6"
	24"	8'-8"	8'-8"	8'-8"	8'-6"	7'-7"	6'-9"
42	48"	3'-8"	3'-8"	3'-8"	3'-8"	3'-8"	3'-8"
	40"	4'-5"	4'-5"	4'-5"	4'-5"	4'-5"	4'-5"
	32"	5'-7"	5'-7"	5'-7"	5'-7"	5'-7"	5'-7"
	24"	7'-5"	7'-5"	7'-5"	7'-5"	7'-5"	6'-9"
50	48"	3'-1"	3'-1"	3'-1"	3'-1"	3'-1"	3'-1"
	40"	3'-9"	3'-9"	3'-9"	3'-9"	3'-9"	3'-9"
	32"	4'-8"	4'-8"	4'-8"	4'-8"	4'-8"	4'-8"
	24"	6'-3"	6'-3"	6'-3"	6'-3"	6'-3"	6'-3"
60	48"	2'-7"	2'-7"	2'-7"	2'-7"	2'-7"	2'-7"
	40"	3'-1"	3'-1"	3'-1"	3'-1"	3'-1"	3'-1"
	32"	3'-11"	3'-11"	3'-11"	3'-11"	3'-11"	3'-11"
	24"	5'-2"	5'-2"	5'-2"	5'-2"	5'-2"	5'-2"

TABLE 1.13

0.032"x2"x6.625" Rafter (Single Span)

Ground Snow Load (psf)	Rafter Spacing (in)	Wind Speed and Exposure: Exp B 120	130	140	Exp C 110	115	120
10 LIVE	48"	14'-10"	14'-10"	13'-9"	14'-10"	14'-3"	13'-7"
	40"	16'-2"	16'-2"	15'-1"	16'-2"	15'-7"	14'-11"
	32"	18'-0"	18'-0"	16'-11"	18'-0"	17'-5"	16'-8"
	24"	20'-8"	20'-8"	19'-5"	20'-8"	20'-0"	19'-1"
		Exposure C 130	140	150	160	170	180
10 LIVE	48"	12'-5"	11'-4"	10'-6"	9'-9"	9'-0"	8'-5"
	40"	13'-7"	12'-6"	11'-7"	10'-9"	10'-0"	9'-4"
	32"	15'-3"	14'-0"	13'-0"	12'-1"	11'-3"	10'-6"
	24"	17'-6"	16'-1"	14'-11"	13'-11"	13'-0"	12'-2"
20 LIVE	48"	10'-7"	10'-7"	10'-6"	9'-9"	9'-0"	8'-5"
	40"	11'-6"	11'-6"	11'-6"	10'-9"	10'-0"	9'-4"
	32"	12'-11"	12'-11"	12'-11"	12'-1"	11'-3"	10'-6"
	24"	14'-10"	14'-10"	14'-10"	13'-11"	13'-0"	12'-2"
25	48"	10'-4"	10'-4"	10'-4"	9'-9"	9'-0"	8'-5"
	40"	11'-3"	11'-3"	11'-3"	10'-9"	10'-0"	9'-4"
	32"	12'-7"	12'-7"	12'-7"	12'-1"	11'-3"	10'-6"
	24"	14'-6"	14'-6"	14'-6"	13'-11"	13'-0"	12'-2"
30	48"	9'-5"	9'-5"	9'-5"	9'-5"	9'-0"	8'-5"
	40"	10'-4"	10'-4"	10'-4"	10'-4"	10'-0"	9'-4"
	32"	11'-6"	11'-6"	11'-6"	11'-6"	11'-3"	10'-6"
	24"	13'-3"	13'-3"	13'-3"	13'-3"	13'-0"	12'-2"
36	48"	8'-8"	8'-8"	8'-8"	8'-8"	8'-8"	8'-5"
	40"	9'-5"	9'-5"	9'-5"	9'-5"	9'-5"	9'-4"
	32"	10'-7"	10'-7"	10'-7"	10'-7"	10'-7"	10'-6"
	24"	12'-2"	12'-2"	12'-2"	12'-2"	12'-2"	12'-2"
42	48"	8'-0"	8'-0"	8'-0"	8'-0"	8'-0"	8'-0"
	40"	8'-9"	8'-9"	8'-9"	8'-9"	8'-9"	8'-9"
	32"	9'-9"	9'-9"	9'-9"	9'-9"	9'-9"	9'-9"
	24"	11'-3"	11'-3"	11'-3"	11'-3"	11'-3"	11'-3"
50	48"	7'-4"	7'-4"	7'-4"	7'-4"	7'-4"	7'-4"
	40"	8'-0"	8'-0"	8'-0"	8'-0"	8'-0"	8'-0"
	32"	8'-11"	8'-11"	8'-11"	8'-11"	8'-11"	8'-11"
	24"	10'-4"	10'-4"	10'-4"	10'-4"	10'-4"	10'-4"
60	48"	6'-3"	6'-3"	6'-3"	6'-3"	6'-3"	6'-3"
	40"	7'-4"	7'-4"	7'-4"	7'-4"	7'-4"	7'-4"
	32"	8'-2"	8'-2"	8'-2"	8'-2"	8'-2"	8'-2"
	24"	9'-5"	9'-5"	9'-5"	9'-5"	9'-5"	9'-5"

TABLE 1.14

0.040"x2"x6.625" Rafter (Single Span)

Ground Snow Load (psf)	Rafter Spacing (in)	Wind Speed and Exposure: Exp B 120	130	140	Exp C 110	115	120
10 LIVE	48"	18'-4"	18'-4"	17'-11"	18'-4"	18'-4"	17'-8"
	40"	20'-0"	20'-0"	19'-3"	20'-0"	19'-7"	19'-0"
	32"	22'-3"	21'-8"	20'-7"	21'-8"	21'-0"	20'-5"
	24"	25'-1"	23'-8"	22'-6"	23'-8"	22'-11"	22'-3"
		Exposure C 130	140	150	160	170	180
10 LIVE	48"	16'-3"	15'-0"	13'-11"	12'-11"	12'-1"	11'-5"
	40"	17'-9"	16'-5"	15'-3"	14'-2"	13'-3"	12'-6"
	32"	19'-4"	18'-3"	16'-11"	15'-10"	14'-10"	13'-11"
	24"	21'-1"	20'-0"	19'-1"	18'-1"	16'-11"	15'-11"
20 LIVE	48"	13'-1"	13'-1"	13'-1"	12'-11"	12'-1"	11'-5"
	40"	14'-4"	14'-4"	14'-4"	14'-2"	13'-3"	12'-6"
	32"	15'-11"	15'-11"	15'-11"	15'-10"	14'-10"	13'-11"
	24"	18'-4"	18'-4"	18'-4"	18'-1"	16'-11"	15'-11"
25	48"	12'-9"	12'-9"	12'-9"	12'-9"	12'-1"	11'-5"
	40"	14'-0"	14'-0"	14'-0"	14'-0"	13'-3"	12'-6"
	32"	15'-7"	15'-7"	15'-7"	15'-7"	14'-10"	13'-11"
	24"	17'-11"	17'-11"	17'-11"	17'-11"	16'-11"	15'-11"
30	48"	11'-8"	11'-8"	11'-8"	11'-8"	11'-8"	11'-5"
	40"	12'-9"	12'-9"	12'-9"	12'-9"	12'-9"	12'-6"
	32"	14'-3"	14'-3"	14'-3"	14'-3"	14'-3"	13'-11"
	24"	16'-5"	16'-5"	16'-5"	16'-5"	16'-5"	15'-11"
36	48"	10'-9"	10'-9"	10'-9"	10'-9"	10'-9"	10'-9"
	40"	11'-9"	11'-9"	11'-9"	11'-9"	11'-9"	11'-9"
	32"	13'-1"	13'-1"	13'-1"	13'-1"	13'-1"	13'-1"
	24"	15'-1"	15'-1"	15'-1"	15'-1"	15'-1"	15'-1"
42	48"	9'-11"	9'-11"	9'-11"	9'-11"	9'-11"	9'-11"
	40"	10'-10"	10'-10"	10'-10"	10'-10"	10'-10"	10'-10"
	32"	12'-1"	12'-1"	12'-1"	12'-1"	12'-1"	12'-1"
	24"	13'-11"	13'-11"	13'-11"	13'-11"	13'-11"	13'-11"
50	48"	9'-1"	9'-1"	9'-1"	9'-1"	9'-1"	9'-1"
	40"	9'-11"	9'-11"	9'-11"	9'-11"	9'-11"	9'-11"
	32"	11'-1"	11'-1"	11'-1"	11'-1"	11'-1"	11'-1"
	24"	12'-9"	12'-9"	12'-9"	12'-9"	12'-9"	12'-9"
60	48"	8'-3"	8'-3"	8'-3"	8'-3"	8'-3"	8'-3"
	40"	9'-1"	9'-1"	9'-1"	9'-1"	9'-1"	9'-1"
	32"	10'-2"	10'-2"	10'-2"	10'-2"	10'-2"	10'-2"
	24"	11'-8"	11'-8"	11'-8"	11'-8"	11'-8"	11'-8"

TABLE 1.15

0.042"x3"x8" Rafter (Single Span)

Ground Snow Load (psf)	Rafter Spacing (in)	Wind Speed and Exposure: Exp B 120	130	140	Exp C 110	115	120
10 LIVE	72"	17'-4"	17'-4"	16'-3"	17'-4"	16'-10"	16'-0"
	64"	18'-4"	18'-4"	17'-3"	18'-4"	17'-10"	17'-0"
	48"	21'-1"	21'-1"	19'-11"	21'-1"	20'-7"	19'-7"
	32"	25'-6"	25'-6"	24'-2"	25'-6"	24'-11"	23'-9"
		Exposure C 130	140	150	160	170	180
10 LIVE	72"	14'-8"	13'-6"	12'-5"	11'-6"	10'-9"	10'-0"
	64"	15'-7"	14'-4"	13'-3"	12'-3"	11'-5"	10'-8"
	48"	18'-0"	16'-7"	15'-4"	14'-3"	13'-4"	12'-5"
	32"	21'-10"	20'-1"	18'-8"	17'-4"	16'-3"	15'-3"
20 LIVE	72"	12'-4"	12'-4"	12'-4"	11'-6"	10'-9"	10'-0"
	64"	13'-1"	13'-1"	13'-1"	12'-3"	11'-5"	10'-8"
	48"	15'-1"	15'-1"	15'-1"	14'-3"	13'-4"	12'-5"
	32"	18'-4"	18'-4"	18'-4"	17'-4"	16'-3"	15'-3"
25	72"	12'-1"	12'-1"	12'-1"	11'-6"	10'-9"	10'-0"
	64"	12'-10"	12'-10"	12'-10"	12'-3"	11'-5"	10'-8"
	48"	14'-9"	14'-9"	14'-9"	14'-3"	13'-4"	12'-5"
	32"	17'-11"	17'-11"	17'-11"	17'-4"	16'-3"	15'-3"
30	72"	11'-0"	11'-0"	11'-0"	11'-0"	10'-9"	10'-0"
	64"	11'-8"	11'-8"	11'-8"	11'-8"	11'-5"	10'-8"
	48"	13'-6"	13'-6"	13'-6"	13'-6"	13'-4"	12'-5"
	32"	16'-5"	16'-5"	16'-5"	16'-5"	16'-3"	15'-3"
36	72"	10'-2"	10'-2"	10'-2"	10'-2"	10'-2"	10'-0"
	64"	10'-9"	10'-9"	10'-9"	10'-9"	10'-9"	10'-8"
	48"	12'-4"	12'-4"	12'-4"	12'-4"	12'-4"	12'-4"
	32"	15'-1"	15'-1"	15'-1"	15'-1"	15'-1"	15'-1"
42	72"	9'-4"	9'-4"	9'-4"	9'-4"	9'-4"	9'-4"
	64"	9'-11"	9'-11"	9'-11"	9'-11"	9'-11"	9'-11"
	48"	11'-5"	11'-5"	11'-5"	11'-5"	11'-5"	11'-5"
	32"	13'-11"	13'-11"	13'-11"	13'-11"	13'-11"	13'-11"
50	72"	8'-7"	8'-7"	8'-7"	8'-7"	8'-7"	8'-7"
	64"	9'-1"	9'-1"	9'-1"	9'-1"	9'-1"	9'-1"
	48"	10'-6"	10'-6"	10'-6"	10'-6"	10'-6"	10'-6"
	32"	12'-10"	12'-10"	12'-10"	12'-10"	12'-10"	12'-10"
60	72"	7'-10"	7'-10"	7'-10"	7'-10"	7'-10"	7'-10"
	64"	8'-3"	8'-3"	8'-3"	8'-3"	8'-3"	8'-3"
	48"	9'-7"	9'-7"	9'-7"	9'-7"	9'-7"	9'-7"
	32"	11'-8"	11'-8"	11'-8"	11'-8"	11'-8"	11'-8"

TABLE 1.16

Lattice Tubes

Ground Snow Load (psf)	Lattice Tube Gauge	Wind Speed and Exposure, Exposure C: 130	140	150	160	170	180
10 LIVE	1.5"x1.5"	72"	72"	72"	72"	72"	72"
	2"x2"	72"	72"	72"	72"	72"	72"
	2"x3"	72"	72"	72"	72"	72"	72"
	3"x3"	72"	72"	72"	72"	72"	72"
20	1.5"x1.5"	72"	72"	72"	72"	72"	72"
	2"x3"	72"	72"	72"	72"	72"	72"
	3"x3"	72"	72"	72"	72"	72"	72"
25	1.5"x1.5"	72"	72"	72"	72"	72"	72"
	2"x2"	69"	69"	69"	69"	69"	69"
	2"x3"	72"	72"	72"	72"	72"	72"
	3"x3"	72"	72"	72"	72"	72"	72"
30	1.5"x1.5"	65"	65"	65"	65"	65"	65"
	2"x2"	62"	62"	62"	62"	62"	62"
	2"x3"	72"	72"	72"	72"	72"	72"
	3"x3"	72"	72"	72"	72"	72"	72"
36	1.5"x1.5"	59"	59"	59"	59"	59"	59"
	2"x2"	56"	56"	56"	56"	56"	56"
	2"x3"	68"	68"	68"	68"	68"	68"
	3"x3"	71"	71"	71"	71"	71"	71"
42	1.5"x1.5"	54"	54"	54"	54"	54"	54"
	2"x2"	50"	50"	50"	50"	50"	50"
	2"x3"	61"	61"	61"	61"	61"	61"
	3"x3"	63"	63"	63"	63"	63"	63"
50	1.5"x1.5"	48"	48"	48"	48"	48"	48"
	2"x2"	45"	45"	45"	45"	45"	45"
	2"x3"	55"	55"	55"	55"	55"	55"
	3"x3"	56"	56"	56"	56"	56"	56"
60	1.5"x1.5"	43"	43"	43"	43"	43"	43"
	2"x2"	39"	39"	39"	39"	39"	39"
	2"x3"	49"	49"	49"	49"	49"	49"
	3"x3"	49"	49"	49"	49"	49"	49"

TABLE 1.21

Amerimax Exterior Home Products
28921 US Hwy 74
Romoland, CA 92585

Carl Putnam, P. E.
3441 Ivylink Place
Lynchburg, VA 24503
carlputnam@comcast.net

NOTE: RAFTERS MAY OVERHANG 25% OF THEIR CLEARSPAN

0.024"x2"x6.625" Rafter (Multispan)

Ground Snow Load	Rafter Spacing	Wind Speed and Exposure, Exposure C: 130	140	150	160	170	180
10 LIVE	48"	8'-1"	7'-4"	6'-7"	6'-0"	5'-5"	5'-0"
	40"	9'-1"	8'-2"	7'-5"	6'-9"	6'-2"	5'-8"
	32"	10'-4"	9'-5"	8'-7"	7'-10"	7'-2"	6'-7"
	24"	12'-1"	11'-0"	9'-8"	8'-6"	7'-7"	6'-9"
20 LIVE	48"	5'-6"	5'-6"	5'-6"	5'-6"	5'-5"	5'-0"
	40"	6'-3"	6'-3"	6'-3"	6'-3"	6'-2"	5'-8"
	32"	7'-4"	7'-4"	7'-4"	7'-4"	7'-2"	6'-7"
	24"	8'-11"	8'-11"	8'-11"	8'-6"	7'-7"	6'-9"
25	48"	5'-3"	5'-3"	5'-3"	5'-3"	5'-3"	5'-0"
	40"	6'-0"	6'-0"	6'-0"	6'-0"	6'-0"	5'-8"
	32"	7'-1"	7'-1"	7'-1"	7'-1"	7'-1"	6'-7"
	24"	8'-7"	8'-7"	8'-7"	8'-6"	7'-7"	6'-9"
30	48"	4'-7"	4'-7"	4'-7"	4'-7"	4'-7"	4'-7"
	40"	5'-3"	5'-3"	5'-3"	5'-3"	5'-3"	5'-3"
	32"	6'-3"	6'-3"	6'-3"	6'-3"	6'-3"	6'-3"
	24"	7'-8"	7'-8"	7'-8"	7'-8"	7'-7"	6'-9"
36	48"	3'-11"	3'-11"	3'-11"	3'-11"	3'-11"	3'-11"
	40"	4'-7"	4'-7"	4'-7"	4'-7"	4'-7"	4'-7"
	32"	5'-6"	5'-6"	5'-6"	5'-6"	5'-6"	5'-6"
	24"	6'-9"	6'-9"	6'-9"	6'-9"	6'-9"	6'-9"
42	48"	3'-5"	3'-5"	3'-5"	3'-5"	3'-5"	3'-5"
	40"	4'-0"	4'-0"	4'-0"	4'-0"	4'-0"	4'-0"
	32"	4'-10"	4'-10"	4'-10"	4'-10"	4'-10"	4'-10"
	24"	6'-0"	6'-0"	6'-0"	6'-0"	6'-0"	6'-0"
50	48"	2'-11"	2'-11"	2'-11"	2'-11"	2'-11"	2'-11"
	40"	3'-5"	3'-5"	3'-5"	3'-5"	3'-5"	3'-5"
	32"	4'-2"	4'-2"	4'-2"	4'-2"	4'-2"	4'-2"
	24"	5'-3"	5'-3"	5'-3"	5'-3"	5'-3"	5'-3"
60	48"	2'-6"	2'-6"	2'-6"	2'-6"	2'-6"	2'-6"
	40"	2'-11"	2'-11"	2'-11"	2'-11"	2'-11"	2'-11"
	32"	3'-7"	3'-7"	3'-7"	3'-7"	3'-7"	3'-7"
	24"	4'-7"	4'-7"	4'-7"	4'-7"	4'-7"	4'-7"

TABLE 1.17

0.032"x2"x6.625" Rafter (Multispan)

Ground Snow Load	Rafter Spacing	Wind Speed and Exposure, Exposure C: 130	140	150	160	170	180
10 LIVE	48"	12'-5"	11'-4"	10'-6"	9'-9"	9'-0"	8'-5"
	40"	13'-7"	12'-6"	11'-7"	10'-9"	10'-0"	9'-4"
	32"	15'-3"	14'-0"	13'-0"	12'-1"	11'-3"	10'-6"
	24"	17'-6"	16'-1"	14'-11"	13'-11"	13'-0"	12'-2"
20 LIVE	48"	9'-0"	9'-0"	9'-0"	9'-0"	9'-0"	8'-5"
	40"	10'-0"	10'-0"	10'-0"	10'-0"	10'-0"	9'-4"
	32"	11'-4"	11'-4"	11'-4"	11'-4"	11'-4"	10'-6"
	24"	13'-3"	13'-3"	13'-3"	13'-3"	13'-0"	12'-2"
25	48"	8'-9"	8'-9"	8'-9"	8'-9"	8'-9"	8'-5"
	40"	9'-9"	9'-9"	9'-9"	9'-9"	9'-9"	9'-4"
	32"	11'-1"	11'-1"	11'-1"	11'-1"	11'-1"	10'-6"
	24"	12'-11"	12'-11"	12'-11"	12'-11"	12'-11"	12'-2"
30	48"	7'-10"	7'-10"	7'-10"	7'-10"	7'-10"	7'-10"
	40"	8'-9"	8'-9"	8'-9"	8'-9"	8'-9"	8'-9"
	32"	10'-0"	10'-0"	10'-0"	10'-0"	10'-0"	10'-0"
	24"	11'-9"	11'-9"	11'-9"	11'-9"	11'-9"	11'-9"
36	48"	7'-0"	7'-0"	7'-0"	7'-0"	7'-0"	7'-0"
	40"	7'-10"	7'-10"	7'-10"	7'-10"	7'-10"	7'-10"
	32"	9'-0"	9'-0"	9'-0"	9'-0"	9'-0"	9'-0"
	24"	10'-8"	10'-8"	10'-8"	10'-8"	10'-8"	10'-8"
42	48"	6'-4"	6'-4"	6'-4"	6'-4"	6'-4"	6'-4"
	40"	7'-1"	7'-1"	7'-1"	7'-1"	7'-1"	7'-1"
	32"	8'-2"	8'-2"	8'-2"	8'-2"	8'-2"	8'-2"
	24"	9'-8"	9'-8"	9'-8"	9'-8"	9'-8"	9'-8"
50	48"	5'-7"	5'-7"	5'-7"	5'-7"	5'-7"	5'-7"
	40"	6'-4"	6'-4"	6'-4"	6'-4"	6'-4"	6'-4"
	32"	7'-4"	7'-4"	7'-4"	7'-4"	7'-4"	7'-4"
	24"	8'-9"	8'-9"	8'-9"	8'-9"	8'-9"	8'-9"
60	48"	4'-11"	4'-11"	4'-11"	4'-11"	4'-11"	4'-11"
	40"	5'-7"	5'-7"	5'-7"	5'-7"	5'-7"	5'-7"
	32"	6'-6"	6'-6"	6'-6"	6'-6"	6'-6"	6'-6"
	24"	7'-10"	7'-10"	7'-10"	7'-10"	7'-10"	7'-10"

TABLE 1.18

0.040"x2"x6.625" Rafter (Multispan)

Ground Snow Load	Rafter Spacing	Wind Speed and Exposure, Exposure C: 130	140	150	160	170	180
10 LIVE	48"	16'-3"	15'-0"	13'-11"	12'-11"	12'-1"	11'-5"
	40"	17'-9"	16'-5"	15'-3"	14'-2"	13'-3"	12'-6"
	32"	19'-4"	18'-3"	16'-11"	15'-10"	14'-10"	13'-11"
	24"	21'-1"	20'-0"	19'-1"	18'-1"	16'-11"	15'-11"
20 LIVE	48"	12'-1"	12'-1"	12'-1"	12'-1"	12'-1"	11'-5"
	40"	13'-3"	13'-3"	13'-3"	13'-3"	13'-3"	12'-6"
	32"	14'-11"	14'-11"	14'-11"	14'-11"	14'-10"	13'-11"
	24"	17'-3"	17'-3"	17'-3"	17'-3"	16'-11"	15'-11"
25	48"	11'-9"	11'-9"	11'-9"	11'-9"	11'-9"	11'-5"
	40"	12'-11"	12'-11"	12'-11"	12'-11"	12'-11"	12'-6"
	32"	14'-6"	14'-6"	14'-6"	14'-6"	14'-6"	13'-11"
	24"	16'-10"	16'-10"	16'-10"	16'-10"	16'-10"	15'-11"
30	48"	10'-8"	10'-8"	10'-8"	10'-8"	10'-8"	10'-8"
	40"	11'-9"	11'-9"	11'-9"	11'-9"	11'-9"	11'-9"
	32"	13'-3"	13'-3"	13'-3"	13'-3"	13'-3"	13'-3"
	24"	15'-4"	15'-4"	15'-4"	15'-4"	15'-4"	15'-4"
36	48"	9'-8"	9'-8"	9'-8"	9'-8"	9'-8"	9'-8"
	40"	10'-8"	10'-8"	10'-8"	10'-8"	10'-8"	10'-8"
	32"	12'-1"	12'-1"	12'-1"	12'-1"	12'-1"	12'-1"
	24"	14'-0"	14'-0"	14'-0"	14'-0"	14'-0"	14'-0"
42	48"	8'-10"	8'-10"	8'-10"	8'-10"	8'-10"	8'-10"
	40"	9'-9"	9'-9"	9'-9"	9'-9"	9'-9"	9'-9"
	32"	11'-0"	11'-0"	11'-0"	11'-0"	11'-0"	11'-0"
	24"	12'-10"	12'-10"	12'-10"	12'-10"	12'-10"	12'-10"
50	48"	8'-0"	8'-0"	8'-0"	8'-0"	8'-0"	8'-0"
	40"	8'-10"	8'-10"	8'-10"	8'-10"	8'-10"	8'-10"
	32"	10'-0"	10'-0"	10'-0"	10'-0"	10'-0"	10'-0"
	24"	11'-9"	11'-9"	11'-9"	11'-9"	11'-9"	11'-9"
60	48"	7'-2"	7'-2"	7'-2"	7'-2"	7'-2"	7'-2"
	40"	8'-0"	8'-0"	8'-0"	8'-0"	8'-0"	8'-0"
	32"	9'-1"	9'-1"	9'-1"	9'-1"	9'-1"	9'-1"
	24"	10'-8"	10'-8"	10'-8"	10'-8"	10'-8"	10'-8"

TABLE 1.19

0.042"x3"x8" Rafter (Multispan)

Ground Snow Load	Rafter Spacing	Wind Speed and Exposure, Exposure C: 130	140	150	160	170	180
10 LIVE	72"	14'-8"	13'-6"	12'-5"	11'-6"	10'-9"	10'-0"
	64"	15'-7"	14'-4"	13'-3"	12'-3"	11'-5"	10'-8"
	48"	18'-0"	16'-7"	15'-4"	14'-3"	13'-4"	12'-5"
	32"	21'-10"	20'-1"	18'-8"	17'-4"	16'-3"	15'-3"
20 LIVE	72"	10'-8"	10'-8"	10'-8"	10'-8"	10'-8"	10'-0"
	64"	11'-5"	11'-5"	11'-5"	11'-5"	11'-5"	10'-8"
	48"	13'-5"	13'-5"	13'-5"	13'-5"	13'-4"	12'-5"
	32"	16'-8"	16'-8"	16'-8"	16'-8"	16'-3"	15'-3"
25	72"	10'-5"	10'-5"	10'-5"	10'-5"	10'-5"	10'-0"
	64"	11'-1"	11'-1"	11'-1"	11'-1"	11'-1"	10'-8"
	48"	13'-1"	13'-1"	13'-1"	13'-1"	13'-1"	12'-5"
	32"	16'-3"	16'-3"	16'-3"	16'-3"	16'-3"	15'-3"
30	72"	9'-4"	9'-4"	9'-4"	9'-4"	9'-4"	9'-4"
	64"	10'-0"	10'-0"	10'-0"	10'-0"	10'-0"	10'-0"
	48"	11'-10"	11'-10"	11'-10"	11'-10"	11'-10"	11'-10"
	32"	14'-9"	14'-9"	14'-9"	14'-9"	14'-9"	14'-9"
36	72"	8'-4"	8'-4"	8'-4"	8'-4"	8'-4"	8'-4"
	64"	9'-0"	9'-0"	9'-0"	9'-0"	9'-0"	9'-0"
	48"	10'-8"	10'-8"	10'-8"	10'-8"	10'-8"	10'-8"
	32"	13'-5"	13'-5"	13'-5"	13'-5"	13'-5"	13'-5"
42	72"	7'-7"	7'-7"	7'-7"	7'-7"	7'-7"	7'-7"
	64"	8'-2"	8'-2"	8'-2"	8'-2"	8'-2"	8'-2"
	48"	9'-9"	9'-9"	9'-9"	9'-9"	9'-9"	9'-9"
	32"	12'-3"	12'-3"	12'-3"	12'-3"	12'-3"	12'-3"
50	72"	6'-9"	6'-9"	6'-9"	6'-9"	6'-9"	6'-9"
	64"	7'-3"	7'-3"	7'-3"	7'-3"	7'-3"	7'-3"
	48"	8'-9"	8'-9"	8'-9"	8'-9"	8'-9"	8'-9"
	32"	11'-1"	11'-1"	11'-1"	11'-1"	11'-1"	11'-1"
60	72"	5'-11"	5'-11"	5'-11"	5'-11"	5'-11"	5'-11"
	64"	6'-5"	6'-5"	6'-5"	6'-5"	6'-5"	6'-5"
	48"	7'-9"	7'-9"	7'-9"	7'-9"	7'-9"	7'-9"
	32"	10'-0"	10'-0"	10'-0"	10'-0"	10'-0"	10'-0"

TABLE 1.20

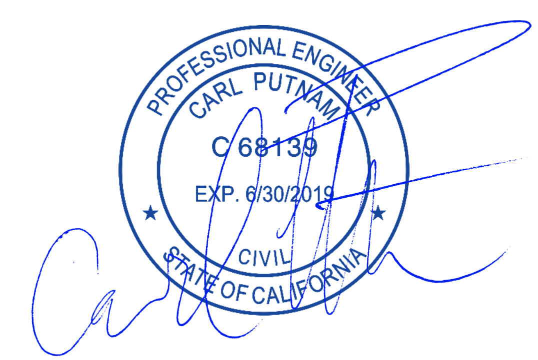

May 27 2017

SECTION 2.0 POST SPACING, POST TYPE AND FOOTING SIZE FOR LATTICE COVER

Ground Snow Load: 0 psf Live Load: 10 psf Roof Design Load 10 psf Wind Speed: 110 MPH EXPOSURE B Seismic Ss= 150% Seismic Design Category D Freestanding or Attached

Table 2.1a

Header	Detail	trib 3'	Min Post Type	Uplift Footing (in)	cubic footing "d" Constrained Footing (in) Max Post Length 8'	10'	12'	trib 3.5'	Min Post Type	Uplift Footing (in)	8'	10'	12'	trib 4'	Min Post Type	Uplift Footing (in)	8'	10'	12'	trib 4.5'	Min Post Type	Uplift Footing (in)	8'	10'	12'	trib 5'	Min Post Type	Uplift Footing (in)	8'	10'	12'
On Slab	On Slab	22'-8"	A1					19'-5"	A1					17'-0"	A1					15'-1"	A1					13'-7"	A1				
0.042"x3"x8"	L1	14'-11"	A1	17	27	29	30	13'-8"	A1	18	27	28	29	12'-7"	A1	18	26	28	29	12'-0"	A1	19	26	27	28	11'-3"	A1	19	25	27	28
Double 3"x8"	L1, L12	21'-8"	A1	20	30	32	33	19'-10"	A1	20	29	31	32	18'-5"	A1	21	29	30	32	17'-8"	A2	21	28	30	31	16'-7"	A2	21	28	30	31
Double 2"x6.625"	L2, L12	19'-2"	A1	19	28	29	31	17'-7"	A1	19	27	29	30	16'-4"	A1	20	26	28	29	15'-8"	A1	20	26	28	29	14'-9"	A1	21	26	27	29
16 G Steel C	L18	28'-7"	A2	22	32	34	35	25'-9"	A2	22	31	33	35	23'-5"	A2	22	30	32	34	22'-2"	A2	23	30	32	33	20'-7"	A2	23	29	31	33
14 G Steel C	L18	33'-3"	A2	23	33	35	37	30'-0"	A2	23	32	34	36	27'-6"	B	24	32	34	35	26'-1"	C	24	31	33	35	24'-3"	C	24	31	32	34
12 G Steel C	L18	40'-0"	C	24	35	37	39	40'-0"	C	25	35	37	39	37'-4"	C	26	34	36	38	35'-7"	D	27	34	36	38	33'-3"	D	27	33	35	37
Double 16 G Steel C	L18, L8	40'-0"	C	24	35	37	39	40'-0"	C	25	35	37	39	40'-0"	D	27	35	37	39	38'-6"	D	27	35	37	38	36'-4"	D	28	34	36	38
Double 14 G Steel C	L18, L8	40'-0"	C	24	35	37	39	40'-0"	C	25	35	37	39	40'-0"	D	27	35	37	39	40'-0"	D	28	35	37	39	40'-0"	D	29	35	37	39
Double 12 G Steel C	L18, L8	40'-0"	C	24	35	37	39	40'-0"	C	25	35	37	39	40'-0"	D	27	35	37	39	40'-0"	D	28	35	37	39	40'-0"	D	29	35	37	39

Header	Detail	trib 5.5'	Min Post Type	Uplift Footing (in)	cubic footing "d" Constrained Footing (in) Max Post Length 8'	10'	12'	trib 6'	Min Post Type	Uplift Footing (in)	8'	10'	12'	trib 6.5'	Min Post Type	Uplift Footing (in)	8'	10'	12'	trib 7'	Min Post Type	Uplift Footing (in)	8'	10'	12'	trib 7.5'	Min Post Type	Uplift Footing (in)	8'	10'	12'	trib 8'	Min Post Type	Uplift Footing (in)	8'	10'	12'	trib 8.5'	Min Post Type	Uplift Footing (in)	8'	10'	12'
On Slab	On Slab	12'-4"	A1					11'-4"	A1					10'-5"	A1					9'-8"	A1					9'-1"	A1					8'-6"	A1					8'-0"	A1				
0.042"x3"x8"	L1	10'-7"	A1	19	25	26	28	10'-0"	A1	19	25	26	27	9'-8"	A1	20	24	26	27	9'-3"	A1	20	24	25	27	8'-10"	A1	20	24	25	26	8'-5"	A1	20	23	25	26	8'-2"	A1	20	23	25	26
Double 3"x8"	L1, L12	15'-8"	A2	22	27	29	30	14'-11"	A2	22	27	29	30	14'-5"	A2	22	27	29	30	13'-10"	A2	23	27	28	30	13'-3"	A2	23	26	28	29	12'-9"	A2	23	26	28	29	12'-5"	A2	23	26	27	29
Double 2"x6.625"	L2, L12	14'-0"	A2	21	25	27	28	13'-4"	A2	21	25	27	28	12'-11"	A2	22	25	26	28	12'-4"	A2	22	25	26	27	11'-10"	A2	22	24	26	27	11'-5"	A2	22	24	26	27	11'-2"	A2	22	24	25	27
16 G Steel C	L18	19'-2"	A2	23	29	31	32	18'-0"	A2	23	28	30	32	17'-3"	B	24	28	30	31	16'-4"	B	24	28	29	31	15'-6"	C	24	27	29	30	14'-9"	C	24	27	29	30	14'-3"	C	24	27	28	30
14 G Steel C	L18	22'-8"	C	25	30	32	33	21'-4"	C	25	30	31	33	20'-6"	C	25	29	31	33	19'-5"	C	25	29	31	32	18'-6"	C	25	29	30	32	17'-8"	C	26	28	30	31	17'-2"	C	26	28	30	31
12 G Steel C	L18	31'-4"	D	27	33	35	36	29'-8"	D	28	32	34	36	28'-8"	D	28	32	34	36	27'-3"	D	28	32	33	35	26'-1"	D	29	31	33	35	25'-0"	D	29	31	33	34	24'-4"	E	29	31	33	34
Double 16 G Steel C	L18, L8	34'-6"	D	28	34	36	37	32'-10"	D	29	33	35	37	31'-10"	E	29	33	35	36	30'-7"	E	29	33	34	36	29'-5"	E	30	32	34	36	28'-4"	E	30	32	34	35	27'-8"	E	30	32	34	35
Double 14 G Steel C	L18, L8	38'-5"	E	29	34	37	38	36'-7"	E	30	34	36	38	35'-7"	E	30	34	36	38	34'-2"	E	30	33	35	37	32'-10"	E	31	33	35	37	31'-9"	E	31	33	35	36	31'-0"	E	32	33	35	36
Double 12 G Steel C	L18, L8	40'-0"	E	30	35	37	39	40'-0"	E	31	35	37	39	40'-0"	E	31	35	37	39	40'-0"	F1	32	35	37	39	40'-0"	F1	33	35	37	39	38'-10"	F1	33	35	37	38	38'-0"	F1	34	34	36	38

Header	Detail	trib 9'	Min Post Type	Uplift Footing (in)	Footing (in) Max Post Length 8'	10'	12'	trib 10'	Min Post Type	Uplift Footing (in)	8'	10'	12'	trib 11'	Min Post Type	Uplift Footing (in)	8'	10'	12'	trib 12'	Min Post Type	Uplift Footing (in)	8'	10'	12'	trib 13'	Min Post Type	Uplift Footing (in)	8'	10'	12'
On Slab	On Slab	7'-6"	A1					6'-9"	A1					6'-2"	A1					5'-8"	A1					5'-2"	A1				
0.042"x3"x8"	L1	7'-11"	A1	20	23	24	26	7'-4"	A1	21	23	25	26	6'-11"	A2	25	24	25	26	6'-6"	A2	21	24	26	27	6'-2"	A2	26	25	26	28
Double 3"x8"	L1, L12	12'-0"	A2	23	26	27	28	11'-3"	B	24	25	27	28	10'-8"	C	29	25	26	28	10'-1"	C	24	25	26	27	9'-8"	C	30	25	26	28
Double 2"x6.625"	L2, L12	10'-9"	A2	23	24	25	26	10'-1"	A2	23	23	25	26	9'-8"	A2	28	24	25	26	9'-2"	B	24	24	26	27	8'-9"	B	29	25	26	28
16 G Steel C	L18	13'-8"	C	24	27	28	29	12'-7"	C	25	26	28	29	11'-9"	C	30	26	27	28	10'-8"	C	25	25	26	28	9'-11"	C	30	25	26	28
14 G Steel C	L18	16'-5"	C	26	28	29	31	15'-2"	D	26	27	29	30	14'-3"	D	32	27	28	30	13'-4"	D	27	26	28	29	12'-8"	D	33	26	28	29
12 G Steel C	L18	23'-5"	E	29	30	32	34	21'-10"	E	30	30	32	33	20'-8"	E	36	29	31	33	19'-6"	E	30	29	31	32	18'-7"	E	37	29	30	32
Double 16 G Steel C	L18, L8	26'-10"	E	31	31	33	35	25'-3"	E	31	31	33	34	24'-1"	E	38	31	32	34	22'-11"	E	32	30	32	34	22'-0"	F1	39	30	32	33
Double 14 G Steel C	L18, L8	30'-1"	E	32	32	34	36	28'-4"	F1	32	32	34	35	27'-1"	F1	40	32	33	35	25'-10"	F1	33	31	33	35	24'-11"	F1	41	31	33	34
Double 12 G Steel C	L18, L8	36'-10"	F1	34	34	36	38	34'-10"	F1	35	34	36	37	33'-4"	F1	43	33	35	37	31'-10"	F1	36	33	35	36	30'-8"	F2	44	33	34	36

Header	Detail	trib 14'	Min Post Type	Uplift Footing (in)	Footing (in) Max Post Length 8'	10'	12'	trib 15'	Min Post Type	Uplift Footing (in)	8'	10'	12'	trib 16'	Min Post Type	Uplift Footing (in)	8'	10'	12'	trib 17'	Min Post Type	Uplift Footing (in)	8'	10'	12'	trib 18'	Min Post Type	Uplift Footing (in)	8'	10'	12'	trib 19'	Min Post Type	Uplift Footing (in)	8'	10'	12'	trib 20'	Min Post Type	Uplift Footing (in)	8'	10'	12'
On Slab	On Slab	4'-10"	A1					4'-6"	A1					4'-3"	A1					4'-0"	A1					3'-9"	A1					3'-7"	A1					3'-4"	A1				
0.042"x3"x8"	L1	5'-10"	A2	21	25	27	28	5'-7"	A2	22	26	27	29	5'-4"	A2	22	26	28	29	5'-1"	A2	22	27	28	29	4'-10"	A2	22	27	29	30	4'-8"	A2	22	27	29	30	4'-6"	A2	22	28	29	31
Double 3"x8"	L1, L12	9'-3"	C	25	25	27	28	8'-11"	C	25	26	27	29	8'-6"	C	25	26	28	29	8'-2"	C	26	27	28	29	7'-11"	C	26	27	29	30	7'-8"	C	26	27	29	30	7'-4"	C	26	28	29	31
Double 2"x6.625"	L2, L12	8'-5"	C	24	25	27	28	8'-1"	C	24	26	27	29	7'-9"	C	25	26	28	29	7'-6"	C	25	27	28	29	7'-3"	C	25	27	29	30	7'-0"	C	25	27	29	30	6'-9"	C	25	28	29	31
16 G Steel C	L18	9'-2"	C	25	25	27	28	8'-7"	C	25	26	27	29	8'-0"	C	25	26	28	29	7'-7"	C	25	27	28	29	7'-2"	C	25	27	29	30	6'-10"	C	25	27	29	30	6'-5"	C	25	28	29	31
14 G Steel C	L18	11'-11"	D	27	26	27	28	11'-5"	D	27	26	27	29	10'-10"	D	27	26	28	29	10'-3"	D	27	27	28	29	9'-8"	D	27	27	29	30	9'-2"	D	28	27	29	30	8'-8"	D	27	28	29	31
12 G Steel C	L18	17'-8"	E	31	28	30	31	17'-0"	E	31	28	30	31	16'-3"	E	31	28	29	31	15'-8"	E	32	27	29	30	15'-0"	E	32	27	29	30	14'-7"	E	32	27	29	30	14'-0"	F1	32	28	29	31
Double 16 G Steel C	L18, L8	21'-1"	F1	33	30	31	33	20'-4"	F1	33	29	31	33	19'-7"	F1	33	29	31	32	19'-0"	F1	34	29	31	32	18'-4"	F1	34	29	30	32	17'-10"	F1	34	28	30	31	17'-3"	F1	34	28	30	31
Double 14 G Steel C	L18, L8	23'-10"	F1	34	31	32	34	23'-1"	F1	35	30	32	34	22'-3"	F1	35	30	32	33	21'-8"	F1	35	30	32	33	20'-11"	F1	35	30	31	33	20'-5"	F1	36	29	31	33	19'-10"	F2	36	29	31	33
Double 12 G Steel C	L18, L8	29'-5"	F2	37	32	34	36	28'-7"	F2	37	32	34	35	27'-7"	F2	37	32	34	35	26'-10"	F2	38	31	33	35	26'-0"	F2	38	31	33	35	25'-4"	F3	39	31	33	34	24'-8"	F3	39	31	33	34

Ground Snow Load: 0 psf Live Load: 10 psf Roof Design Load 10 psf Wind Speed: 110 MPH EXPOSURE C or 130 MPH EXPOSURE B Seismic Ss= 150% Seismic Design Category D Freestanding or Attached

Table 2.1b

Header	Detail	trib 3'	Min Post Type	Uplift Footing (in)	cubic footing "d" Constrained Footing (in) Max Post Length 8'	10'	12'	trib 3.5'	Min Post Type	Uplift Footing (in)	8'	10'	12'	trib 4'	Min Post Type	Uplift Footing (in)	8'	10'	12'	trib 4.5'	Min Post Type	Uplift Footing (in)	8'	10'	12'	trib 5'	Min Post Type	Uplift Footing (in)	8'	10'	12'
On Slab	On Slab	22'-8"	A1					19'-5"	A1					17'-0"	A1					15'-1"	A1					13'-7"	A1				
0.042"x3"x8"	L1	14'-11"	A1	20	30	31	33	13'-8"	A1	20	29	31	32	12'-7"	A1	20	28	30	31	12'-0"	A1	21	28	30	31	11'-3"	A1	21	28	29	31
Double 3"x8"	L1, L12	21'-8"	A1	22	32	34	36	19'-10"	A1	23	32	34	35	18'-5"	A1	23	31	33	35	17'-8"	A2	24	31	33	34	16'-7"	A2	24	30	32	34
Double 2"x6.625"	L2, L12	19'-2"	A1	21	30	32	33	17'-7"	A1	22	29	31	33	16'-4"	A1	22	29	31	32	15'-8"	A1	23	29	30	32	14'-9"	A1	23	28	30	31
16 G Steel C	L18	28'-7"	A2	24	35	37	39	25'-9"	A2	25	34	36	38	23'-5"	A2	25	33	35	37	22'-2"	A2	26	33	35	36	20'-7"	A2	26	32	34	36
14 G Steel C	L18	33'-3"	A2	26	36	38	40	30'-0"	A2	26	35	37	39	27'-6"	B	27	35	37	38	26'-1"	C	27	34	36	38	24'-3"	C	27	33	35	37
12 G Steel C	L18	40'-0"	C	27	38	40	42	40'-0"	C	29	38	40	42	37'-4"	C	29	37	39	41	35'-7"	D	30	37	39	41	33'-3"	D	31	36	38	40
Double 16 G Steel C	L18, L8	40'-0"	C	27	38	40	42	40'-0"	C	29	38	40	42	40'-0"	D	30	38	40	42	38'-6"	D	31	38	40	42	36'-4"	D	31	37	39	41
Double 14 G Steel C	L18, L8	40'-0"	C	27	38	40	42	40'-0"	C	29	38	40	42	40'-0"	D	30	38	40	42	40'-0"	D	31	38	40	42	40'-0"	D	32	38	40	42
Double 12 G Steel C	L18, L8	40'-0"	C	27	38	40	42	40'-0"	C	29	38	40	42	40'-0"	D	30	38	40	42	40'-0"	D	31	38	40	42	40'-0"	D	32	38	40	42

Header	Detail	trib 5.5'	Min Post Type	Uplift Footing (in)	cubic footing "d" Constrained Footing (in) Max Post Length 8'	10'	12'	trib 6'	Min Post Type	Uplift Footing (in)	8'	10'	12'	trib 6.5'	Min Post Type	Uplift Footing (in)	8'	10'	12'	trib 7'	Min Post Type	Uplift Footing (in)	8'	10'	12'	trib 7.5'	Min Post Type	Uplift Footing (in)	8'	10'	12'	trib 8'	Min Post Type	Uplift Footing (in)	8'	10'	12'	trib 8.5'	Min Post Type	Uplift Footing (in)	8'	10'	12'
On Slab	On Slab	12'-4"	A1					11'-4"	A1					10'-5"	A1					9'-8"	A1					9'-1"	A1					8'-6"	A1					8'-0"	A1				
0.042"x3"x8"	L1	10'-7"	A1	22	27	29	30	10'-0"	A1	22	27	28	30	9'-8"	A1	22	27	28	29	9'-3"	A1	22	26	28	29	8'-10"	A1	22	26	27	29	8'-5"	A1	23	26	27	28	8'-2"	A1	23	25	27	28
Double 3"x8"	L1, L12	15'-8"	A2	25	30	32	33	14'-11"	A2	25	30	31	33	14'-5"	A2	25	29	31	33	13'-10"	A2	25	29	31	32	13'-3"	A2	26	29	30	32	12'-9"	A2	26	28	30	32	12'-5"	A2	26	28	30	31
Double 2"x6.625"	L2, L12	14'-0"	A2	24	28	29	31	13'-4"	A2	24	27	29	30	12'-11"	A2	24	27	29	30	12'-4"	A2	25	27	28	30	11'-10"	A2	25	27	28	29	11'-5"	A2	25	26	28	29	11'-2"	A2	25	26	28	29
16 G Steel C	L18	19'-2"	A2	26	32	33	35	18'-0"	A2	26	31	33	34	17'-3"	B	27	31	32	34	16'-4"	B	27	30	32	34	15'-6"	C	27	30	32	33	14'-9"	C	27	29	31	33	14'-3"	C	27	29	31	32
14 G Steel C	L18	22'-8"	C	28	33	35	36	21'-4"	C	28	32	34	36	20'-6"	C	28	32	34	36	19'-5"	C	29	32	33	35	18'-6"	C	29	31	33	35	17'-8"	C	29	31	33	34	17'-2"	C	29	31	32	34
12 G Steel C	L18	31'-4"	D	31	36	38	40	29'-8"	D	31	35	37	39	28'-8"	D	32	35	37	39	27'-3"	D	32	34	36	38	26'-1"	D	32	34	36	38	25'-0"	D	32	34	36	37	24'-4"	E	33	33	35	37
Double 16 G Steel C	L18, L8	34'-6"	D	32	37	39	41	32'-10"	D	32	36	38	40	31'-10"	E	33	36	38	40	30'-7"	E	33	35	38	39	29'-5"	E	34	35	37	39	28'-4"	E	34	35	37	39	27'-8"	E	34	35	37	38
Double 14 G Steel C	L18, L8	38'-5"	E	33	38	40	42	36'-7"	E	33	37	39	41	35'-7"	E	34	37	39	41	34'-2"	E	34	36	39	40	32'-10"	E	35	36	38	40	31'-9"	E	35	36	38	40	31'-0"	E	36	36	38	39
Double 12 G Steel C	L18, L8	40'-0"	E	33	38	40	42	40'-0"	E	34	38	40	42	40'-0"	E	35	38	40	42	40'-0"	F1	36	38	40	42	40'-0"	F1	37	38	40	42	38'-10"	F1	38	38	40	42	38'-0"	F1	38	37	40	42

Header	Detail	trib 9'	Min Post Type	Uplift Footing (in)	Footing (in) Max Post Length 8'	10'	12'	trib 10'	Min Post Type	Uplift Footing (in)	8'	10'	12'	trib 11'	Min Post Type	Uplift Footing (in)	8'	10'	12'	trib 12'	Min Post Type	Uplift Footing (in)	8'	10'	12'	trib 13'	Min Post Type	Uplift Footing (in)	8'	10'	12'
On Slab	On Slab	7'-6"	A1					6'-9"	A1					6'-2"	A1					5'-8"	A1					5'-2"	A1				
0.042"x3"x8"	L1	7'-11"	A1	23	25	27	28	7'-4"	A1	23	25	27	28	6'-11"	A2	24	26	27	29	6'-6"	A2	24	27	28	29	6'-2"	A2	24	27	29	30
Double 3"x8"	L1, L12	12'-0"	A2	26	28	30	31	11'-3"	B	27	28	29	31	10'-8"	C	27	27	29	30	10'-1"	C	27	27	28	30	9'-8"	C	28	27	29	30
Double 2"x6.625"	L2, L12	10'-9"	A2	26	26	27	29	10'-1"	A2	26	26	27	28	9'-8"	A2	26	26	27	29	9'-2"	B	27	27	28	29	8'-9"	B	27	27	29	30
16 G Steel C	L18	13'-8"	C	28	29	31	32	12'-7"	C	28	28	30	31	11'-9"	C	28	28	29	31	10'-8"	C	28	27	29	30	9'-11"	C	28	27	29	30
14 G Steel C	L18	16'-5"	C	29	30	32	34	15'-2"	D	30	30	31	33	14'-3"	D	30	29	31	32	13'-4"	D	30	29	30	32	12'-8"	D	30	28	30	31
12 G Steel C	L18	23'-5"	E	33	33	35	37	21'-10"	E	33	33	34	36	20'-8"	E	34	32	34	36	19'-6"	E	34	32	33	35	18'-7"	E	35	31	33	35
Double 16 G Steel C	L18, L8	26'-10"	E	35	34	36	38	25'-3"	E	35	34	36	37	24'-1"	E	36	33	35	37	22'-11"	E	36	33	35	37	22'-0"	F1	37	33	35	36
Double 14 G Steel C	L18, L8	30'-1"	E	36	35	37	39	28'-4"	F1	36	35	37	39	27'-1"	F1	37	34	36	38	25'-10"	F1	38	34	36	38	24'-11"	F1	38	34	36	37
Double 12 G Steel C	L18, L8	36'-10"	F1	38	37	39	41	34'-10"	F1	39	37	39	41	33'-4"	F1	40	36	38	40	31'-10"	F1	40	36	38	40	30'-8"	F2	41	35	38	39

Header	Detail	trib 14'	Min Post Type	Uplift Footing (in)	Footing (in) Max Post Length 8'	10'	12'	trib 15'	Min Post Type	Uplift Footing (in)	8'	10'	12'	trib 16'	Min Post Type	Uplift Footing (in)	8'	10'	12'	trib 17'	Min Post Type	Uplift Footing (in)	8'	10'	12'	trib 18'	Min Post Type	Uplift Footing (in)	8'	10'	12'	trib 19'	Min Post Type	Uplift Footing (in)	8'	10'	12'	trib 20'	Min Post Type	Uplift Footing (in)	8'	10'	12'
On Slab	On Slab	4'-10"	A1					4'-6"	A1					4'-3"	A1					4'-0"	A1					3'-9"	A1					3'-7"	A1					3'-4"	A1				
0.042"x3"x8"	L1	5'-10"	A2	24	28	29	31	5'-7"	A2	24	28	30	31	5'-4"	A2	24	29	30	32	5'-1"	A2	25	29	31	32	4'-10"	A2	25	29	31	33	4'-8"	A2	25	30	32	33	4'-6"	A2	25	30	32	33
Double 3"x8"	L1, L12	9'-3"	C	28	28	29	31	8'-11"	C	28	28	30	31	8'-6"	C	29	29	30	32	8'-2"	C	29	29	31	32	7'-11"	C	29	29	31	33	7'-8"	C	29	30	32	33	7'-4"	C	29	30	32	33
Double 2"x6.625"	L2, L12	8'-5"	C	27	28	29	31	8'-1"	C	27	28	30	31	7'-9"	C	28	29	30	32	7'-6"	C	28	29	31	32	7'-3"	C	28	29	31	33	7'-0"	C	28	30	32	33	6'-9"	C	29	30	32	33
16 G Steel C	L18	9'-2"	C	28	28	29	31	8'-7"	C	28	28	30	31	8'-0"	C	28	29	30	32	7'-7"	C	28	29	31	32	7'-2"	C	28	29	31	33	6'-10"	C	28	30	32	33	6'-5"	C	28	30	32	33
14 G Steel C	L18	11'-11"	D	31	28	30	31	11'-5"	D	31	28	30	31	10'-10"	D	31	29	30	32	10'-3"	D	31	29	31	32	9'-8"	D	31	29	31	33	9'-2"	D	31	30	32	33	8'-8"	D	31	30	32	33
12 G Steel C	L18	17'-8"	E	35	31	33	34	17'-0"	E	35	31	32	34	16'-3"	E	35	30	32	33	15'-8"	E	36	30	32	33	15'-0"	E	36	30	31	33	14'-7"	E	36	30	32	33	14'-0"	F1	36	30	32	33
Double 16 G Steel C	L18, L8	21'-1"	F1	37	32	34	36	20'-4"	F1	37	32	34	35	19'-7"	F1	38	32	34	35	19'-0"	F1	38	31	33	35	18'-4"	F1	38	31	33	35	17'-10"	F1	39	31	33	34	17'-3"	F1	39	31	32	34
Double 14 G Steel C	L18, L8	23'-10"	F1	38	33	35	37	23'-1"	F1	39	33	35	37	22'-3"	F1	39	33	35	36	21'-8"	F1	40	32	34	36	20'-11"	F1	40	32	34	36	20'-5"	F1	40	32	34	35	19'-10"	F2	41	32	34	35
Double 12 G Steel C	L18, L8	29'-5"	F2	41	35	37	39	28'-7"	F2	42	35	37	39	27'-7"	F2	42	35	37	38	26'-10"	F2	43	34	36	38	26'-0"	F2	43	34	36	38	25'-4"	F3	43	34	36	37	24'-8"	F3	44	34	36	37

Ground Snow Load: 0 psf Live Load: 10 psf Roof Design Load 10 psf Wind Speed: 115 MPH EXPOSURE B Seismic Ss= 150% Seismic Design Category D Structures are Attached to Existing Building

Table 2.1c

Header	Detail	trib 3'	Min Post Type	Uplift Footing (in)	cubic footing "d" Constrained Footing (in) Max Post Length 8'	10'	12'	trib 3.5'	Min Post Type	Uplift Footing (in)	8'	10'	12'	trib 4'	Min Post Type	Uplift Footing (in)	8'	10'	12'	trib 4.5'	Min Post Type	Uplift Footing (in)	8'	10'	12'	trib 5'	Min Post Type	Uplift Footing (in)	8'	10'	12'
On Slab	On Slab	22'-8"	A1					19'-5"	A1					17'-0"	A1					15'-1"	A1					13'-7"	A1				
0.042"x3"x8"	L1	14'-11"	A1	18	17	18	19	13'-8"	A1	18	18	19	20	12'-7"	A1	19	19	20	21	12'-0"	A1	19	19	21	21	11'-3"	A1	19	20	21	22
Double 3"x8"	L1, L12	21'-8"	A1	20	18	20	21	19'-10"	A1	21	19	20	21	18'-5"	A1	21	19	20	21	17'-8"	A2	22	19	21	22	16'-7"	A2	22	20	21	22
Double 2"x6.625"	L2, L12	19'-2"	A1	20	18	19	20	17'-7"	A1	20	18	19	20	16'-4"	A1	20	19	20	21	15'-8"	A1	21	19	21	21	14'-9"	A1	21	20	21	22
16 G Steel C	L18	28'-7"	A2	22	20	21	22	25'-9"	A2	23	20	21	22	23'-5"	A2	23	20	22	23	22'-2"	A2	24	21	22	23	20'-7"	A2	24	21	22	23
14 G Steel C	L18	33'-3"	A2	24	21	22	23	30'-0"	A2	24	21	22	23	27'-6"	B	24	21	22	23	26'-1"	C	25	21	23	24	24'-3"	C	25	22	23	24
12 G Steel C	L18	40'-0"	C	25	22	23	24	40'-0"	C	26	22	24	25	37'-4"	C	27	23	24	25	35'-7"	D	28	23	25	26	33'-3"	D	28	24	25	26
Double 16 G Steel C	L18, L8	40'-0"	C	25	22	23	24	40'-0"	C	26	22	24	25	40'-0"	D	28	23	25	26	38'-6"	D	28	24	25	26	36'-4"	D	29	24	25	27
Double 14 G Steel C	L18, L8	40'-0"	C	25	22	23	24	40'-0"	C	26	22	24	25	40'-0"	D	28	23	25	26	40'-0"	D	29	24	25	27	40'-0"	D	30	25	26	27
Double 12 G Steel C	L18, L8	40'-0"	C	25	22	23	24	40'-0"	C	26	22	24	25	40'-0"	D	28	23	25	26	40'-0"	D	29	24	25	27	40'-0"	D	30	25	26	27

Header	Detail	trib 5.5'	Min Post Type	Uplift Footing (in)	cubic footing "d" Constrained Footing (in) Max Post Length 8'	10'	12'	trib 6'	Min Post Type	Uplift Footing (in)	8'	10'	12'	trib 6.5'	Min Post Type	Uplift Footing (in)	8'	10'	12'	trib 7'	Min Post Type	Uplift Footing (in)	8'	10'	12'	trib 7.5'	Min Post Type	Uplift Footing (in)	8'	10'	12'	trib 8'	Min Post Type	Uplift Footing (in)	8'	10'	12'	trib 8.5'	Min Post Type	Uplift Footing (in)	8'	10'	12'
On Slab	On Slab	12'-4"	A1					11'-4"	A1					10'-5"	A1					9'-8"	A1					9'-1"	A1					8'-6"	A1					8'-0"	A1				
0.042"x3"x8"	L1	10'-7"	A1	20	20	22	23	10'-0"	A1	20	21	22	23	9'-8"	A1	20	21	23	24	9'-3"	A1	20	22	23	24	8'-10"	A1	21	22	23	24	8'-5"	A1	21	22	24	25	8'-2"	A1	21	23	24	25
Double 3"x8"	L1, L12	15'-8"	A2	22	20	22	23	14'-11"	A2	23	21	22	23	14'-5"	A2	23	21	23	24	13'-10"	A2	23	22	23	24	13'-3"	A2	24	22	23	24	12'-9"	A2	24	22	24	25	12'-5"	A2	24	23	24	25
Double 2"x6.625"	L2, L12	14'-0"	A2	22	20	22	23	13'-4"	A2	22	21	22	23	12'-11"	A2	22	21	23	24	12'-4"	A2	22	22	23	24	11'-10"	A2	23	22	23	24	11'-5"	A2	23	22	24	25	11'-2"	A2	23	23	24	25
16 G Steel C	L18	19'-2"	A2	24	21	22	23	18'-0"	A2	24	21	22	23	17'-3"	B	24	21	23	24	16'-4"	B	25	22	23	24	15'-6"	C	25	22	23	24	14'-9"	C	25	22	24	25	14'-3"	C	25	23	24	25
14 G Steel C	L18	22'-8"	C	25	22	23	24	21'-4"	C	26	22	23	24	20'-6"	C	26	22	24	25	19'-5"	C	26	22	24	25	18'-6"	C	26	22	24	25	17'-8"	C	26	23	24	25	17'-2"	C	27	23	24	25
12 G Steel C	L18	31'-4"	D	28	24	25	26	29'-8"	D	29	24	25	27	28'-8"	D	29	24	26	27	27'-3"	D	29	24	26	27	26'-1"	D	29	25	26	27	25'-0"	D	30	25	26	27	24'-4"	E	30	25	26	28
Double 16 G Steel C	L18, L8	34'-6"	D	29	24	26	27	32'-10"	D	30	25	26	27	31'-10"	E	30	25	26	28	30'-7"	E	30	25	27	28	29'-5"	E	31	25	27	28	28'-4"	E	31	25	27	28	27'-8"	E	31	26	27	28
Double 14 G Steel C	L18, L8	38'-5"	E	30	25	26	28	36'-7"	E	31	25	27	28	35'-7"	E	31	26	27	28	34'-2"	E	31	26	27	29	32'-10"	E	32	26	28	29	31'-9"	E	32	26	28	29	31'-0"	E	33	26	28	29
Double 12 G Steel C	L18, L8	40'-0"	E	31	25	27	28	40'-0"	E	32	26	27	29	40'-0"	E	32	26	28	29	40'-0"	F1	33	27	28	30	40'-0"	F1	34	27	29	30	38'-10"	F1	34	28	29	31	38'-0"	F1	35	28	29	31

Header	Detail	trib 9'	Min Post Type	Uplift Footing (in)	Footing (in) Max Post Length 8'	10'	12'	trib 10'	Min Post Type	Uplift Footing (in)	8'	10'	12'	trib 11'	Min Post Type	Uplift Footing (in)	8'	10'	12'	trib 12'	Min Post Type	Uplift Footing (in)	8'	10'	12'	trib 13'	Min Post Type	Uplift Footing (in)	8'	10'	12'
On Slab	On Slab	7'-6"	A1					6'-9"	A1					6'-2"	A1					5'-8"	A1					5'-2"	A1				
0.042"x3"x8"	L1	7'-11"	A1	21	24	25	26	7'-4"	A1	21	24	25	26	6'-11"	A2	22	24	26	27	6'-6"	A2	22	25	26	28	6'-2"	A2	22	25	27	28
Double 3"x8"	L1, L12	12'-0"	A2	24	26	28	29	11'-3"	B	25	26	27	29	10'-8"	C	25	26	27	28	10'-1"	C	25	25	27	28	9'-8"	C	25	25	27	28
Double 2"x6.625"	L2, L12	10'-9"	A2	23	24	26	27	10'-1"	A2	24	24	25	27	9'-8"	A2	24	24	26	27	9'-2"	B	24	25	26	28	8'-9"	B	25	25	27	28
16 G Steel C	L18	13'-8"	C	25	27	29	30	12'-7"	C	25	27	28	29	11'-9"	C	26	26	28	29	10'-8"	C	26	26	27	28	9'-11"	C	26	25	27	28
14 G Steel C	L18	16'-5"	C	27	28	30	32	15'-2"	D	27	28	30	31	14'-3"	D	27	27	29	30	13'-4"	D	28	27	29	30	12'-8"	D	28	27	28	30
12 G Steel C	L18	23'-5"	E	30	31	33	35	21'-10"	E	31	31	32	34	20'-8"	E	31	30	32	33	19'-6"	E	31	30	31	33	18'-7"	E	32	29	31	33
Double 16 G Steel C	L18, L8	26'-10"	E	32	32	34	36	25'-3"	E	32	32	34	35	24'-1"	E	33	31	33	35	22'-11"	E	33	31	33	34	22'-0"	F1	33	31	32	34
Double 14 G Steel C	L18, L8	30'-1"	E	33	33	35	37	28'-4"	F1	33	33	35	36	27'-1"	F1	34	32	34	36	25'-10"	F1	34	32	34	35	24'-11"	F1	35	32	33	35
Double 12 G Steel C	L18, L8	36'-10"	F1	35	35	37	39	34'-10"	F1	36	34	36	38	33'-4"	F1	36	34	36	38	31'-10"	F1	37	34	36	37	30'-8"	F2	37	33	35	37

Header	Detail	trib 14'	Min Post Type	Uplift Footing (in)	Footing (in) Max Post Length 8'	10'	12'	trib 15'	Min Post Type	Uplift Footing (in)	8'	10'	12'	trib 16'	Min Post Type	Uplift Footing (in)	8'	10'	12'	trib 17'	Min Post Type	Uplift Footing (in)	8'	10'	12'	trib 18'	Min Post Type	Uplift Footing (in)	8'	10'	12'	trib 19'	Min Post Type	Uplift Footing (in)	8'	10'	12'	trib 20'	Min Post Type	Uplift Footing (in)	8'	10'	12'
On Slab	On Slab	4'-10"	A1					4'-6"	A1					4'-3"	A1					4'-0"	A1					3'-9"	A1					3'-7"	A1					3'-4"	A1				
0.042"x3"x8"	L1	5'-10"	A2	22	26	27	29	5'-7"	A2	22	26	28	29	5'-4"	A2	22	27	28	30	5'-1"	A2	23	27	29	30	4'-10"	A2	23	28	29	31	4'-8"	A2	23	28	30	31	4'-6"	A2	23	28	30	31
Double 3"x8"	L1, L12	9'-3"	C	26	26	27	29	8'-11"	C	26	26	28	29	8'-6"	C	26	27	28	30	8'-2"	C	26	27	29	30	7'-11"	C	27	28	29	31	7'-8"	C	27	28	30	31	7'-4"	C	27	28	30	31
Double 2"x6.625"	L2, L12	8'-5"	C	25	26	27	29	8'-1"	C	25	26	28	29	7'-9"	C	25	27	28	30	7'-6"	C	26	27	29	30	7'-3"	C	26	28	29	31	7'-0"	C	26	28	30	31	6'-9"	C	26	28	30	31
16 G Steel C	L18	9'-2"	C	26	26	27	29	8'-7"	C	26	26	28	29	8'-0"	C	26	27	28	30	7'-7"	C	26	27	29	30	7'-2"	C	26	28	29	31	6'-10"	C	26	28	30	31	6'-5"	C	26	28	30	31
14 G Steel C	L18	11'-11"	D	28	26	28	29	11'-5"	D	28	26	28	29	10'-10"	D	28	27	28	30	10'-3"	D	28	27	29	30	9'-8"	D	28	28	29	31	9'-2"	D	28	28	30	31	8'-8"	D	28	28	30	31
12 G Steel C	L18	17'-8"	E	32	29	31	32	17'-0"	E	32	29	30	32	16'-3"	E	32	28	30	31	15'-8"	E	33	28	30	31	15'-0"	E	33	28	29	31	14'-7"	E	33	28	30	31	14'-0"	F1	33	28	30	31
Double 16 G Steel C	L18, L8	21'-1"	F1	34	30	32	34	20'-4"	F1	34	30	32	33	19'-7"	F1	34	30	31	33	19'-0"	F1	35	30	31	33	18'-4"	F1	35	29	31	32	17'-10"	F1	35	29	31	32	17'-3"	F1	36	29	30	32
Double 14 G Steel C	L18, L8	23'-10"	F1	35	31	33	35	23'-1"	F1	36	31	33	34	22'-3"	F1	36	31	33	34	21'-8"	F1	36	31	32	34	20'-11"	F1	37	30	32	34	20'-5"	F1	37	30	32	33	19'-10"	F2	37	30	32	33
Double 12 G Steel C	L18, L8	29'-5"	F2	38	33	35	37	28'-7"	F2	38	33	35	36	27'-7"	F2	39	32	34	36	26'-10"	F2	39	32	34	36	26'-0"	F2	39	32	34	35	25'-4"	F3	40	32	34	35	24'-8"	F3	40	32	33	35

Amerimax Exterior Home Products
28921 US Hwy 74
Romoland, CA 92585

Carl Putnam, P. E.
3441 Ivylink Place
Lynchburg, VA 24503
(434) 384-2514
carlputnam@comcast.net

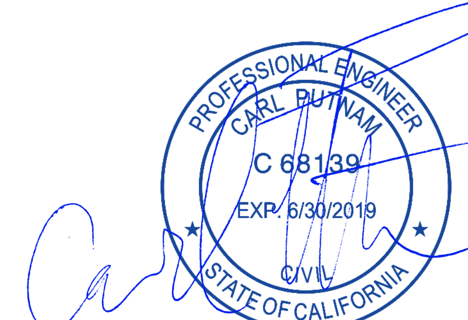

Ground Snow Load: 0 psf   Live Load: 10 psf   Roof Design Load 10 psf   Wind Speed: 115 MPH EXPOSURE B   Seismic Ss= 150%   Seismic Design Category D   Freestanding or Attached

Table 2.2a (cubic footing "d")

Header	Detail	trib 3'	Min Post Type	Uplift Footing (in)	Constrained Footing (in) Max Post Length 8'	10'	12'	trib 3.5'	Min Post Type	Uplift Footing (in)	8'	10'	12'	trib 4'	Min Post Type	Uplift Footing (in)	8'	10'	12'	trib 4.5'	Min Post Type	Uplift Footing (in)	8'	10'	12'	trib 5'	Min Post Type	Uplift Footing (in)	8'	10'	12'	trib 5.5'	Min Post Type	Uplift Footing (in)	8'	10'	12'
On Slab	On Slab	22'-8"	A1					19'-5"	A1					17'-0"	A1					15'-1"	A1					13'-7"	A1					12'-4"	A1				
0.042"x3"x8"	L1	14'-11"	A1	18	28	29	31	13'-8"	A1	18	27	29	30	12'-7"	A1	19	27	28	29	12'-0"	A1	19	26	28	29	11'-3"	A1	19	26	27	29	10'-7"	A1	20	25	27	28
Double 3"x8"	L1, L12	21'-8"	A1	20	31	32	34	19'-10"	A1	21	30	32	33	18'-5"	A1	21	29	31	32	17'-8"	A2	22	29	31	32	16'-7"	A2	22	29	30	32	15'-8"	A2	22	28	30	31
Double 2"x6.625"	L2, L12	19'-2"	A1	20	28	30	31	17'-7"	A1	20	28	29	31	16'-4"	A1	20	27	29	30	15'-8"	A1	21	27	28	30	14'-9"	A1	21	26	28	29	14'-0"	A2	22	26	28	29
16 G Steel C	L18	28'-7"	A2	22	33	35	36	25'-9"	A2	23	32	34	35	23'-5"	A2	23	31	33	35	22'-2"	A2	24	31	32	34	20'-7"	A2	24	30	32	33	19'-2"	A2	24	30	31	33
14 G Steel C	L18	33'-3"	A2	24	34	36	38	30'-0"	A2	24	33	35	37	27'-6"	B	24	32	34	36	26'-1"	C	25	32	34	35	24'-3"	C	25	31	33	35	22'-8"	C	25	31	33	34
12 G Steel C	L18	40'-0"	C	25	36	38	40	40'-0"	C	26	36	38	40	37'-4"	C	27	35	37	39	35'-7"	D	28	35	37	38	33'-3"	D	28	34	36	38	31'-4"	D	28	34	35	37
Double 16 G Steel C	L18, L8	40'-0"	C	25	36	38	40	40'-0"	C	26	36	38	40	40'-0"	D	28	36	38	40	38'-6"	D	28	35	37	39	36'-4"	D	29	35	37	39	34'-6"	D	29	34	36	38
Double 14 G Steel C	L18, L8	40'-0"	C	25	36	38	40	40'-0"	C	26	36	38	40	40'-0"	D	28	36	38	40	40'-0"	D	29	36	38	40	40'-0"	D	30	36	38	40	38'-5"	E	30	35	37	39
Double 12 G Steel C	L18, L8	40'-0"	C	25	36	38	40	40'-0"	C	26	36	38	40	40'-0"	D	28	36	38	40	40'-0"	D	29	36	38	40	40'-0"	D	30	36	38	40	40'-0"	E	31	36	38	40

Header	Detail	trib 6'	Min Post Type	Uplift Footing (in)	Constrained Footing (in) Max Post Length 8'	10'	12'	trib 6.5'	Min Post Type	Uplift Footing (in)	8'	10'	12'	trib 7'	Min Post Type	Uplift Footing (in)	8'	10'	12'	trib 7.5'	Min Post Type	Uplift Footing (in)	8'	10'	12'	trib 8'	Min Post Type	Uplift Footing (in)	8'	10'	12'	trib 8.5'	Min Post Type	Uplift Footing (in)	8'	10'	12'
On Slab	On Slab	11'-4"	A1					10'-5"	A1					9'-8"	A1					9'-1"	A1					8'-6"	A1					8'-0"	A1				
0.042"x3"x8"	L1	10'-0"	A1	20	25	27	28	9'-8"	A1	20	25	26	28	9'-3"	A1	20	25	26	27	8'-10"	A1	21	24	26	27	8'-5"	A1	21	24	25	27	8'-2"	A1	21	24	25	26
Double 3"x8"	L1, L12	14'-11"	A2	23	28	29	31	14'-5"	A2	23	28	29	31	13'-10"	A2	23	27	29	30	13'-3"	A2	24	27	29	30	12'-9"	A2	24	27	28	30	12'-5"	A2	24	27	28	29
Double 2"x6.625"	L2, L12	13'-4"	A2	22	26	27	29	12'-11"	A2	22	26	27	28	12'-4"	A2	22	25	27	28	11'-10"	A2	23	25	26	28	11'-5"	A2	23	25	26	27	11'-2"	A2	23	25	26	27
16 G Steel C	L18	18'-0"	A2	24	29	31	32	17'-3"	B	24	29	31	32	16'-4"	B	25	28	30	31	15'-6"	C	25	28	30	31	14'-9"	C	25	28	29	31	14'-3"	C	25	27	29	30
14 G Steel C	L18	21'-4"	C	26	30	32	34	20'-6"	C	26	30	32	33	19'-5"	C	26	30	31	33	18'-6"	C	26	29	31	33	17'-8"	C	26	29	31	32	17'-2"	C	27	29	30	32
12 G Steel C	L18	29'-8"	D	29	33	35	37	28'-8"	D	29	33	35	36	27'-3"	D	29	32	34	36	26'-1"	D	29	32	34	35	25'-0"	D	30	32	33	35	24'-4"	E	30	31	33	35
Double 16 G Steel C	L18, L8	32'-10"	D	30	34	36	38	31'-10"	E	30	34	36	37	30'-7"	E	30	33	35	37	29'-5"	E	31	33	35	37	28'-4"	E	31	33	35	36	27'-8"	E	31	32	34	36
Double 14 G Steel C	L18, L8	36'-7"	E	31	35	37	39	35'-7"	E	31	35	37	38	34'-2"	E	31	34	36	38	32'-10"	E	32	34	36	38	31'-9"	E	32	34	36	37	31'-0"	E	33	33	35	37
Double 12 G Steel C	L18, L8	40'-0"	E	32	36	38	40	40'-0"	E	32	36	38	40	40'-0"	F1	33	36	38	40	40'-0"	F1	34	36	38	40	38'-10"	F1	34	35	37	39	38'-0"	F1	35	35	37	39

Header	Detail	trib 9'	Min Post Type	Uplift Footing (in)	Footing (in) Max Post Length 8'	10'	12'	trib 10'	Min Post Type	Uplift Footing (in)	8'	10'	12'	trib 11'	Min Post Type	Uplift Footing (in)	8'	10'	12'	trib 12'	Min Post Type	Uplift Footing (in)	8'	10'	12'	trib 13'	Min Post Type	Uplift Footing (in)	8'	10'	12'	trib 14'	Min Post Type	Uplift Footing (in)	8'	10'	12'
On Slab	On Slab	7'-6"	A1					6'-9"	A1					6'-2"	A1					5'-8"	A1					5'-2"	A1					4'-10"	A1				
0.042"x3"x8"	L1	7'-11"	A1	21	24	25	26	7'-4"	A1	21	24	25	26	6'-11"	A2	25	24	26	27	6'-6"	A2	22	25	26	28	6'-2"	A2	26	25	27	28	5'-10"	A2	22	26	27	29
Double 3"x8"	L1, L12	12'-0"	A2	24	26	28	29	11'-3"	B	25	26	27	29	10'-8"	C	29	26	27	28	10'-1"	C	25	25	27	28	9'-8"	C	30	25	27	28	9'-3"	C	26	26	27	29
Double 2"x6.625"	L2, L12	10'-9"	A2	23	24	26	27	10'-1"	A2	24	24	25	27	9'-8"	A2	28	24	26	27	9'-2"	B	24	25	26	28	8'-9"	B	29	25	27	28	8'-5"	C	25	26	27	29
16 G Steel C	L18	13'-8"	C	25	27	29	30	12'-7"	C	25	27	28	29	11'-9"	C	30	26	28	29	10'-8"	C	26	26	27	28	9'-11"	C	30	25	27	28	9'-2"	C	26	26	27	29
14 G Steel C	L18	16'-5"	C	27	28	30	32	15'-2"	D	27	28	30	31	14'-3"	D	32	27	29	30	13'-4"	D	28	27	29	30	12'-8"	D	33	27	28	30	11'-11"	D	28	26	28	29
12 G Steel C	L18	23'-5"	E	30	31	33	35	21'-10"	E	31	31	32	34	20'-8"	E	36	30	32	33	19'-6"	E	31	30	31	33	18'-7"	E	37	29	31	33	17'-8"	E	32	29	31	32
Double 16 G Steel C	L18, L8	26'-10"	E	32	32	34	36	25'-3"	E	32	32	34	35	24'-1"	E	38	31	33	35	22'-11"	E	33	31	33	34	22'-0"	F1	39	31	32	34	21'-1"	F1	34	30	32	34
Double 14 G Steel C	L18, L8	30'-1"	E	33	33	35	37	28'-4"	F1	33	33	35	36	27'-1"	F1	40	32	34	36	25'-10"	F1	34	32	34	35	24'-11"	F1	41	32	33	35	23'-10"	F1	35	31	33	35
Double 12 G Steel C	L18, L8	36'-10"	F1	35	35	37	39	34'-10"	F1	36	34	36	38	33'-4"	F1	43	34	36	38	31'-10"	F1	37	34	36	37	30'-8"	F2	44	33	35	37	29'-5"	F2	38	33	35	37

Header	Detail	trib 15'	Min Post Type	Uplift Footing (in)	Footing (in) Max Post Length 8'	10'	12'	trib 16'	Min Post Type	Uplift Footing (in)	8'	10'	12'	trib 17'	Min Post Type	Uplift Footing (in)	8'	10'	12'	trib 18'	Min Post Type	Uplift Footing (in)	8'	10'	12'	trib 19'	Min Post Type	Uplift Footing (in)	8'	10'	12'	trib 20'	Min Post Type	Uplift Footing (in)	8'	10'	12'
On Slab	On Slab	4'-6"	A1					4'-3"	A1					4'-0"	A1					3'-9"	A1					3'-7"	A1					3'-4"	A1				
0.042"x3"x8"	L1	5'-7"	A2	22	26	28	29	5'-4"	A2	22	27	28	30	5'-1"	A2	23	27	29	30	4'-10"	A2	23	28	29	31	4'-8"	A2	23	28	30	31	4'-6"	A2	23	28	30	31
Double 3"x8"	L1, L12	8'-11"	C	26	26	28	29	8'-6"	C	26	27	28	30	8'-2"	C	26	27	29	30	7'-11"	C	27	28	29	31	7'-8"	C	27	28	30	31	7'-4"	C	27	28	30	31
Double 2"x6.625"	L2, L12	8'-1"	C	25	26	28	29	7'-9"	C	25	27	28	30	7'-6"	C	26	27	29	30	7'-3"	C	26	28	29	31	7'-0"	C	26	28	30	31	6'-9"	C	26	28	30	31
16 G Steel C	L18	8'-7"	C	26	26	28	29	8'-0"	C	26	27	28	30	7'-7"	C	26	27	29	30	7'-2"	C	26	28	29	31	6'-10"	C	26	28	30	31	6'-5"	C	26	28	30	31
14 G Steel C	L18	11'-5"	D	28	26	28	29	10'-10"	D	28	27	28	30	10'-3"	D	28	27	29	30	9'-8"	D	28	28	29	31	9'-2"	D	28	28	30	31	8'-8"	D	28	28	30	31
12 G Steel C	L18	17'-0"	E	32	29	30	32	16'-3"	E	32	28	30	31	15'-8"	E	33	28	30	31	15'-0"	E	33	28	29	31	14'-7"	E	33	28	30	31	14'-0"	F1	33	28	30	31
Double 16 G Steel C	L18, L8	20'-4"	F1	34	30	32	33	19'-7"	F1	34	30	31	33	19'-0"	F1	35	30	31	33	18'-4"	F1	35	29	31	32	17'-10"	F1	35	29	31	32	17'-3"	F1	36	29	30	32
Double 14 G Steel C	L18, L8	23'-1"	F1	36	31	33	34	22'-3"	F1	36	31	33	34	21'-8"	F1	36	31	32	34	20'-11"	F1	37	30	32	34	20'-5"	F1	37	30	32	33	19'-10"	F2	37	30	32	33
Double 12 G Steel C	L18, L8	28'-7"	F2	38	33	35	36	27'-7"	F2	39	32	34	36	26'-10"	F2	39	32	34	36	26'-0"	F2	39	32	34	35	25'-4"	F3	40	32	34	35	24'-8"	F3	40	32	33	35

Ground Snow Load: 0 psf   Live Load: 10 psf   Roof Design Load 10 psf   Wind Speed: 115 MPH EXPOSURE C or 130 MPH EXPOSURE B   Seismic Ss= 150%   Seismic Design Category D   Freestanding or Attached

Table 2.2b (cubic footing "d")

Header	Detail	trib 3'	Min Post Type	Uplift Footing (in)	Constrained Footing (in) Max Post Length 8'	10'	12'	trib 3.5'	Min Post Type	Uplift Footing (in)	8'	10'	12'	trib 4'	Min Post Type	Uplift Footing (in)	8'	10'	12'	trib 4.5'	Min Post Type	Uplift Footing (in)	8'	10'	12'	trib 5'	Min Post Type	Uplift Footing (in)	8'	10'	12'	trib 5.5'	Min Post Type	Uplift Footing (in)	8'	10'	12'
On Slab	On Slab	22'-8"	A1					19'-5"	A1					17'-0"	A1					15'-1"	A1					13'-7"	A1					12'-4"	A1				
0.042"x3"x8"	L1	14'-5"	A1	20	30	32	33	13'-8"	A1	21	30	31	33	12'-7"	A1	21	29	31	32	11'-9"	A1	21	28	30	32	11'-0"	A1	22	28	30	31	10'-5"	A1	22	28	29	31
Double 3"x8"	L1, L12	21'-0"	A1	23	33	35	37	19'-10"	A1	24	33	34	36	18'-5"	A2	24	32	34	35	17'-3"	A2	24	31	33	35	16'-3"	A2	25	31	33	34	15'-5"	A2	25	31	32	34
Double 2"x6.625"	L2, L12	18'-7"	A1	22	30	32	34	17'-7"	A1	23	30	32	33	16'-4"	A1	23	30	31	33	15'-4"	A1	23	29	31	32	14'-6"	A2	24	29	30	32	13'-9"	A2	24	28	30	31
16 G Steel C	L18	27'-7"	A2	25	35	37	39	25'-9"	A2	26	35	37	38	23'-5"	A2	26	34	36	38	21'-7"	A2	26	33	35	37	20'-1"	A2	27	33	35	36	18'-9"	A2	27	32	34	36
14 G Steel C	L18	32'-1"	A2	26	37	39	41	30'-0"	A2	27	36	38	40	27'-6"	B	27	35	37	39	25'-5"	C	28	35	37	38	23'-8"	C	28	34	36	38	22'-2"	C	28	33	35	37
12 G Steel C	L18	40'-0"	C	28	39	41	43	40'-0"	C	30	39	41	43	37'-4"	D	30	38	40	42	34'-9"	D	31	37	40	42	32'-7"	D	31	37	39	41	30'-9"	D	32	36	38	40
Double 16 G Steel C	L18, L8	40'-0"	C	28	39	41	43	40'-0"	C	30	39	41	43	40'-0"	D	31	39	41	43	37'-9"	D	32	38	40	42	35'-8"	D	32	38	40	42	33'-11"	D	33	37	39	41
Double 14 G Steel C	L18, L8	40'-0"	C	28	39	41	43	40'-0"	C	30	39	41	43	40'-0"	D	31	39	41	43	40'-0"	D	32	39	41	43	39'-8"	E	33	39	41	43	37'-9"	E	34	38	40	42
Double 12 G Steel C	L18, L8	40'-0"	C	28	39	41	43	40'-0"	C	30	39	41	43	40'-0"	D	31	39	41	43	40'-0"	D	32	39	41	43	40'-0"	E	33	39	41	43	40'-0"	E	35	39	41	43

Header	Detail	trib 6'	Min Post Type	Uplift Footing (in)	Constrained Footing (in) Max Post Length 8'	10'	12'	trib 6.5'	Min Post Type	Uplift Footing (in)	8'	10'	12'	trib 7'	Min Post Type	Uplift Footing (in)	8'	10'	12'	trib 7.5'	Min Post Type	Uplift Footing (in)	8'	10'	12'	trib 8'	Min Post Type	Uplift Footing (in)	8'	10'	12'	trib 8.5'	Min Post Type	Uplift Footing (in)	8'	10'	12'
On Slab	On Slab	11'-4"	A1					10'-5"	A1					9'-8"	A1					9'-1"	A1					8'-6"	A1					8'-0"	A1				
0.042"x3"x8"	L1	9'-10"	A1	22	27	29	30	9'-6"	A1	23	27	29	30	9'-1"	A1	23	27	28	30	8'-8"	A1	23	26	28	29	8'-4"	A1	23	26	28	29	8'-0"	A1	23	26	27	29
Double 3"x8"	L1, L12	14'-8"	A2	25	30	32	33	14'-3"	A2	26	30	32	33	13'-8"	A2	26	30	31	33	13'-1"	A2	26	29	31	32	12'-7"	A2	27	29	31	32	12'-2"	A2	27	29	30	32
Double 2"x6.625"	L2, L12	13'-1"	A2	25	28	30	31	12'-8"	A2	25	28	29	31	12'-2"	A2	25	27	29	30	11'-9"	A2	25	27	29	30	11'-3"	A2	26	27	28	30	10'-11"	A2	26	27	28	30
16 G Steel C	L18	17'-7"	A2	27	32	33	35	16'-11"	B	27	31	33	35	16'-0"	C	28	31	33	34	15'-3"	C	28	30	32	34	14'-6"	C	28	30	32	33	13'-10"	C	28	30	31	33
14 G Steel C	L18	20'-11"	C	29	33	35	37	20'-2"	C	29	33	35	36	19'-1"	C	29	32	34	36	18'-2"	C	29	32	34	35	17'-5"	C	30	31	33	35	16'-8"	C	30	31	33	34
12 G Steel C	L18	29'-2"	D	32	36	38	40	28'-2"	D	33	36	38	39	26'-10"	D	33	35	37	39	25'-9"	D	33	35	37	38	24'-8"	E	33	34	36	38	23'-9"	E	34	34	36	38
Double 16 G Steel C	L18, L8	32'-4"	D	33	37	39	41	31'-5"	E	34	37	39	40	30'-2"	E	34	36	38	40	29'-0"	E	34	36	38	40	28'-0"	E	35	35	38	39	27'-1"	E	35	35	37	39
Double 14 G Steel C	L18, L8	36'-1"	E	34	38	40	42	35'-1"	E	35	38	40	42	33'-8"	E	35	37	39	41	32'-6"	E	36	37	39	41	31'-4"	E	36	37	39	40	30'-4"	E	36	36	38	40
Double 12 G Steel C	L18, L8	40'-0"	E	36	39	41	43	40'-0"	E	37	39	41	43	40'-0"	F1	37	39	41	43	39'-9"	F1	38	39	41	43	38'-5"	F1	39	38	41	43	37'-3"	F1	39	38	40	42

Header	Detail	trib 9'	Min Post Type	Uplift Footing (in)	Footing (in) Max Post Length 8'	10'	12'	trib 10'	Min Post Type	Uplift Footing (in)	8'	10'	12'	trib 11'	Min Post Type	Uplift Footing (in)	8'	10'	12'	trib 12'	Min Post Type	Uplift Footing (in)	8'	10'	12'	trib 13'	Min Post Type	Uplift Footing (in)	8'	10'	12'	trib 14'	Min Post Type	Uplift Footing (in)	8'	10'	12'
On Slab	On Slab	7'-6"	A1					6'-9"	A1					6'-2"	A1					5'-8"	A1					5'-2"	A1					4'-10"	A1				
0.042"x3"x8"	L1	7'-8"	A1	24	26	27	28	7'-3"	A2	24	26	27	29	6'-9"	A2	24	27	28	29	6'-4"	A2	24	27	29	30	6'-1"	A2	25	28	29	31	5'-9"	A2	25	28	30	31
Double 3"x8"	L1, L12	11'-9"	A2	27	28	30	32	11'-2"	B	28	28	30	31	10'-6"	C	28	28	29	31	9'-11"	C	28	27	29	30	9'-6"	C	29	28	29	31	9'-1"	C	29	28	30	31
Double 2"x6.625"	L2, L12	10'-7"	A2	26	26	28	29	10'-0"	A2	27	26	28	29	9'-6"	A2	27	27	28	29	9'-0"	B	27	27	29	30	8'-8"	C	28	28	29	31	8'-3"	C	28	28	30	31
16 G Steel C	L18	13'-3"	C	28	29	31	33	12'-5"	C	29	29	31	32	11'-4"	C	29	28	30	31	10'-5"	C	29	28	29	31	9'-8"	C	29	28	29	31	8'-11"	C	29	28	30	31
14 G Steel C	L18	16'-0"	C	30	31	33	34	15'-0"	D	30	30	32	34	13'-11"	D	31	30	31	33	13'-1"	D	31	29	31	32	12'-5"	D	31	29	31	32	11'-9"	D	31	28	30	32
12 G Steel C	L18	22'-10"	E	34	34	36	37	21'-7"	E	34	33	35	37	20'-3"	E	35	33	35	36	19'-2"	E	35	32	34	36	18'-4"	E	35	32	34	35	17'-5"	E	36	31	33	35
Double 16 G Steel C	L18, L8	26'-3"	E	35	35	37	39	25'-0"	E	36	34	36	38	23'-8"	E	37	34	36	38	22'-6"	F1	37	34	36	37	21'-8"	F1	38	33	35	37	20'-9"	F1	38	33	35	36
Double 14 G Steel C	L18, L8	29'-5"	E	37	36	38	40	28'-1"	F1	37	36	38	39	26'-8"	F1	38	35	37	39	25'-5"	F1	39	35	37	38	24'-6"	F1	39	34	36	38	23'-7"	F1	40	34	36	38
Double 12 G Steel C	L18, L8	36'-2"	F1	39	38	40	42	34'-6"	F1	40	37	40	41	32'-10"	F1	41	37	39	41	31'-4"	F1	41	37	39	40	30'-3"	F2	42	36	38	40	29'-1"	F2	42	36	38	40

Header	Detail	trib 15'	Min Post Type	Uplift Footing (in)	Footing (in) Max Post Length 8'	10'	12'	trib 16'	Min Post Type	Uplift Footing (in)	8'	10'	12'	trib 17'	Min Post Type	Uplift Footing (in)	8'	10'	12'	trib 18'	Min Post Type	Uplift Footing (in)	8'	10'	12'	trib 19'	Min Post Type	Uplift Footing (in)	8'	10'	12'	trib 20'	Min Post Type	Uplift Footing (in)	8'	10'	12'
On Slab	On Slab	4'-6"	A1					4'-3"	A1					4'-0"	A1					3'-9"	A1					3'-7"	A1					3'-4"	A1				
0.042"x3"x8"	L1	5'-5"	A2	25	29	30	32	5'-3"	A2	25	29	31	32	5'-0"	A2	25	30	31	33	4'-9"	A2	25	30	32	33	4'-7"	A2	25	30	32	34	4'-5"	A2	26	31	33	34
Double 3"x8"	L1, L12	8'-8"	C	29	29	30	32	8'-5"	C	29	29	31	32	8'-1"	C	30	30	31	33	7'-9"	C	30	30	32	33	7'-6"	C	30	30	32	34	7'-3"	C	30	31	33	34
Double 2"x6.625"	L2, L12	7'-11"	C	28	29	30	32	7'-8"	C	28	29	31	32	7'-4"	C	29	30	31	33	7'-1"	C	29	30	32	33	6'-11"	C	29	30	32	34	6'-8"	C	29	31	33	34
16 G Steel C	L18	8'-4"	C	29	29	30	32	7'-10"	C	29	29	31	32	7'-4"	C	29	30	31	33	6'-11"	C	29	30	32	33	6'-7"	C	29	30	32	34	6'-3"	C	29	31	33	34
14 G Steel C	L18	11'-1"	D	32	29	30	32	10'-8"	D	32	29	31	32	10'-0"	D	32	30	31	33	9'-5"	D	32	30	32	33	8'-11"	D	32	30	32	34	8'-6"	D	32	31	33	34
12 G Steel C	L18	16'-7"	E	36	31	33	34	16'-0"	E	36	31	33	34	15'-4"	E	37	30	32	34	14'-9"	E	37	30	32	33	14'-3"	F1	37	30	32	34	13'-9"	F1	37	31	33	34
Double 16 G Steel C	L18, L8	19'-11"	F1	38	33	34	36	19'-4"	F1	39	32	34	36	18'-8"	F1	39	32	34	35	18'-0"	F1	39	32	34	35	17'-6"	F1	40	32	33	35	17'-0"	F1	40	31	33	35
Double 14 G Steel C	L18, L8	22'-8"	F1	40	34	36	37	22'-0"	F1	40	33	35	37	21'-3"	F1	41	33	35	37	20'-7"	F1	41	33	35	36	20'-1"	F2	42	33	35	36	19'-6"	F2	42	32	34	36
Double 12 G Steel C	L18, L8	28'-0"	F2	43	35	38	39	27'-3"	F2	43	35	37	39	26'-5"	F2	44	35	37	39	25'-7"	F3	44	35	37	38	25'-0"	F3	45	34	36	38	24'-4"	F3	45	34	36	38

Ground Snow Load: 0 psf   Live Load: 10 psf   Roof Design Load 10 psf   Wind Speed: 115 MPH EXPOSURE C or 130 MPH EXPOSURE B   Seismic Ss= 150%   Seismic Design Category D   Structures are Attached to Existing Building

Table 2.2c (cubic footing "d")

Header	Detail	trib 3'	Min Post Type	Uplift Footing (in)	Constrained Footing (in) Max Post Length 8'	10'	12'	trib 3.5'	Min Post Type	Uplift Footing (in)	8'	10'	12'	trib 4'	Min Post Type	Uplift Footing (in)	8'	10'	12'	trib 4.5'	Min Post Type	Uplift Footing (in)	8'	10'	12'	trib 5'	Min Post Type	Uplift Footing (in)	8'	10'	12'	trib 5.5'	Min Post Type	Uplift Footing (in)	8'	10'	12'
On Slab	On Slab	22'-8"	A1					19'-5"	A1					17'-0"	A1					15'-1"	A1					13'-7"	A1					12'-4"	A1				
0.042"x3"x8"	L1	14'-5"	A1	20	19	20	21	13'-8"	A1	21	20	21	22	12'-7"	A1	21	20	22	23	11'-9"	A1	21	21	22	23	11'-0"	A1	22	22	23	24	10'-5"	A1	22	22	24	25
Double 3"x8"	L1, L12	21'-0"	A1	23	19	20	21	19'-10"	A1	24	20	21	22	18'-5"	A1	24	20	22	23	17'-3"	A2	24	21	22	23	16'-3"	A2	25	22	23	24	15'-5"	A2	25	22	24	25
Double 2"x6.625"	L2, L12	18'-7"	A1	22	19	20	21	17'-7"	A1	23	20	21	22	16'-4"	A1	23	20	22	23	15'-4"	A1	23	21	22	23	14'-6"	A1	24	22	23	24	13'-9"	A2	24	22	24	25
16 G Steel C	L18	27'-7"	A2	25	20	21	22	25'-9"	A2	26	20	21	22	23'-5"	A2	26	20	22	23	21'-7"	A2	26	21	22	23	20'-1"	A2	27	22	23	24	18'-9"	A2	27	22	24	25
14 G Steel C	L18	32'-1"	A2	26	20	22	23	30'-0"	A2	27	21	22	23	27'-6"	B	27	21	22	23	25'-5"	B	28	21	23	24	23'-8"	C	28	22	23	24	22'-2"	C	28	22	24	25
12 G Steel C	L18	40'-0"	C	28	22	23	24	40'-0"	C	30	22	24	25	37'-4"	C	30	23	24	25	34'-9"	D	31	23	24	26	32'-7"	D	31	23	25	26	30'-9"	D	32	24	25	26
Double 16 G Steel C	L18, L8	40'-0"	C	28	22	23	24	40'-0"	C	30	22	24	25	40'-0"	D	31	23	25	26	37'-9"	D	32	24	25	26	35'-8"	D	32	24	25	27	33'-11"	D	33	24	26	27
Double 14 G Steel C	L18, L8	40'-0"	C	28	22	23	24	40'-0"	C	30	22	24	25	40'-0"	D	31	23	25	26	40'-0"	D	32	24	25	27	39'-8"	D	33	25	26	27	37'-9"	E	34	25	26	28
Double 12 G Steel C	L18, L8	40'-0"	C	28	22	23	24	40'-0"	C	30	22	24	25	40'-0"	D	31	23	25	26	40'-0"	D	32	24	25	27	40'-0"	D	33	25	26	27	40'-0"	E	35	25	27	28

Header	Detail	trib 6'	Min Post Type	Uplift Footing (in)	Constrained Footing (in) Max Post Length 8'	10'	12'	trib 6.5'	Min Post Type	Uplift Footing (in)	8'	10'	12'	trib 7'	Min Post Type	Uplift Footing (in)	8'	10'	12'	trib 7.5'	Min Post Type	Uplift Footing (in)	8'	10'	12'	trib 8'	Min Post Type	Uplift Footing (in)	8'	10'	12'	trib 8.5'	Min Post Type	Uplift Footing (in)	8'	10'	12'
On Slab	On Slab	11'-4"	A1					10'-5"	A1					9'-8"	A1					9'-1"	A1					8'-6"	A1					8'-0"	A1				
0.042"x3"x8"	L1	9'-10"	A1	22	23	24	25	9'-6"	A1	23	23	25	26	9'-1"	A1	23	24	25	26	8'-8"	A1	23	24	25	27	8'-4"	A1	23	24	26	27	8'-0"	A1	23	25	26	28
Double 3"x8"	L1, L12	14'-8"	A2	25	23	24	25	14'-3"	A2	26	23	25	26	13'-8"	A2	26	24	25	26	13'-1"	A2	26	24	25	27	12'-7"	A2	27	24	26	27	12'-2"	A2	27	25	26	28
Double 2"x6.625"	L2, L12	13'-1"	A2	25	23	24	25	12'-8"	A2	25	23	25	26	12'-2"	A2	25	24	25	26	11'-9"	A2	25	24	25	27	11'-3"	A2	26	24	26	27	10'-11"	A2	26	25	26	28
16 G Steel C	L18	17'-7"	A2	27	23	24	25	16'-11"	B	27	23	25	26	16'-0"	B	28	24	25	26	15'-3"	B	28	24	25	27	14'-6"	C	28	24	26	27	13'-10"	C	28	25	26	28
14 G Steel C	L18	20'-11"	C	29	23	24	25	20'-2"	C	29	23	25	26	19'-1"	C	29	24	25	26	18'-2"	C	29	24	25	27	17'-5"	C	30	24	26	27	16'-8"	C	30	25	26	28
12 G Steel C	L18	29'-2"	D	32	24	25	26	28'-2"	D	33	24	26	27	26'-10"	D	33	24	26	27	25'-9"	D	33	24	26	27	24'-8"	D	33	25	26	27	23'-9"	E	34	25	26	28
Double 16 G Steel C	L18, L8	32'-4"	D	33	24	26	27	31'-5"	E	34	25	26	27	30'-2"	E	34	25	26	28	29'-0"	E	34	25	27	28	28'-0"	E	35	25	27	28	27'-1"	E	35	26	27	28
Double 14 G Steel C	L18, L8	36'-1"	E	34	25	27	28	35'-1"	E	35	25	27	28	33'-8"	E	35	26	27	28	32'-6"	E	36	26	27	29	31'-4"	E	36	26	28	29	30'-4"	E	36	26	28	29
Double 12 G Steel C	L18, L8	40'-0"	E	36	26	27	29	40'-0"	E	37	26	28	29	40'-0"	F1	37	27	28	30	39'-9"	F1	38	27	29	30	38'-5"	F1	39	27	29	30	37'-3"	F1	39	28	29	31

Header	Detail	trib 9'	Min Post Type	Uplift Footing (in)	Footing (in) Max Post Length 8'	10'	12'	trib 10'	Min Post Type	Uplift Footing (in)	8'	10'	12'	trib 11'	Min Post Type	Uplift Footing (in)	8'	10'	12'	trib 12'	Min Post Type	Uplift Footing (in)	8'	10'	12'	trib 13'	Min Post Type	Uplift Footing (in)	8'	10'	12'	trib 14'	Min Post Type	Uplift Footing (in)	8'	10'	12'
On Slab	On Slab	7'-6"	A1					6'-9"	A1					6'-2"	A1					5'-8"	A1					5'-2"	A1					4'-10"	A1				
0.042"x3"x8"	L1	7'-8"	A1	24	26	27	28	7'-3"	A2	24	26	27	29	6'-9"	A2	24	27	28	29	6'-4"	A2	24	27	29	30	6'-1"	A2	25	28	29	31	5'-9"	A2	25	28	30	31
Double 3"x8"	L1, L12	11'-9"	A2	27	28	30	32	11'-2"	B	28	28	30	31	10'-6"	C	28	28	29	31	9'-11"	C	28	27	29	30	9'-6"	C	29	28	29	31	9'-1"	C	29	28	30	31
Double 2"x6.625"	L2, L12	10'-7"	A2	26	26	28	29	10'-0"	A2	27	26	28	29	9'-6"	A2	27	27	28	29	9'-0"	B	27	27	29	30	8'-8"	C	28	28	29	31	8'-3"	C	28	28	30	31
16 G Steel C	L18	13'-3"	C	28	29	31	33	12'-5"	C	29	29	31	32	11'-4"	C	29	28	30	31	10'-5"	C	29	28	29	31	9'-8"	C	29	28	29	31	8'-11"	C	29	28	30	31
14 G Steel C	L18	16'-0"	C	30	31	33	34	15'-0"	D	30	30	32	34	13'-11"	D	31	30	31	33	13'-1"	D	31	29	31	32	12'-5"	D	31	29	31	32	11'-9"	D	31	28	30	32
12 G Steel C	L18	22'-10"	E	34	34	36	37	21'-7"	E	34	33	35	37	20'-3"	E	35	33	35	36	19'-2"	E	35	32	34	36	18'-4"	E	35	32	34	35	17'-5"	E	36	31	33	35
Double 16 G Steel C	L18, L8	26'-3"	E	35	35	37	39	25'-0"	E	36	34	36	38	23'-8"	E	37	34	36	38	22'-6"	F1	37	34	36	37	21'-8"	F1	38	33	35	37	20'-9"	F1	38	33	35	36
Double 14 G Steel C	L18, L8	29'-5"	E	37	36	38	40	28'-1"	F1	37	36	38	39	26'-8"	F1	38	35	37	39	25'-5"	F1	39	35	37	38	24'-6"	F1	39	34	36	38	23'-7"	F1	40	34	36	38
Double 12 G Steel C	L18, L8	36'-2"	F1	39	38	40	42	34'-6"	F1	40	37	40	41	32'-10"	F1	41	37	39	41	31'-4"	F1	41	37	39	40	30'-3"	F2	42	36	38	40	29'-1"	F2	42	36	38	40

Header	Detail	trib 15'	Min Post Type	Uplift Footing (in)	Footing (in) Max Post Length 8'	10'	12'	trib 16'	Min Post Type	Uplift Footing (in)	8'	10'	12'	trib 17'	Min Post Type	Uplift Footing (in)	8'	10'	12'	trib 18'	Min Post Type	Uplift Footing (in)	8'	10'	12'	trib 19'	Min Post Type	Uplift Footing (in)	8'	10'	12'	trib 20'	Min Post Type	Uplift Footing (in)	8'	10'	12'
On Slab	On Slab	4'-6"	A1					4'-3"	A1					4'-0"	A1					3'-9"	A1					3'-7"	A1					3'-4"	A1				
0.042"x3"x8"	L1	5'-5"	A2	25	29	30	32	5'-3"	A2	25	29	31	32	5'-0"	A2	25	30	31	33	4'-9"	A2	25	30	32	33	4'-7"	A2	25	30	32	34	4'-5"	A2	26	31	33	34
Double 3"x8"	L1, L12	8'-8"	C	29	29	30	32	8'-5"	C	29	29	31	32	8'-1"	C	30	30	31	33	7'-9"	C	30	30	32	33	7'-6"	C	30	30	32	34	7'-3"	C	30	31	33	34
Double 2"x6.625"	L2, L12	7'-11"	C	28	29	30	32	7'-8"	C	28	29	31	32	7'-4"	C	29	30	31	33	7'-1"	C	29	30	32	33	6'-11"	C	29	30	32	34	6'-8"	C	29	31	33	34
16 G Steel C	L18	8'-4"	C	29	29	30	32	7'-10"	C	29	29	31	32	7'-4"	C	29	30	31	33	6'-11"	C	29	30	32	33	6'-7"	C	29	30	32	34	6'-3"	C	29	31	33	34
14 G Steel C	L18	11'-1"	D	32	29	30	32	10'-8"	D	32	29	31	32	10'-0"	D	32	30	31	33	9'-5"	D	32	30	32	33	8'-11"	D	32	30	32	34	8'-6"	D	32	31	33	34
12 G Steel C	L18	16'-7"	E	36	31	33	34	16'-0"	E	36	31	33	34	15'-4"	E	37	30	32	34	14'-9"	E	37	30	32	33	14'-3"	F1	37	30	32	34	13'-9"	F1	37	31	33	34
Double 16 G Steel C	L18, L8	19'-11"	F1	38	33	34	36	19'-4"	F1	39	32	34	36	18'-8"	F1	39	32	34	35	18'-0"	F1	39	32	34	35	17'-6"	F1	40	32	33	35	17'-0"	F1	40	31	33	35
Double 14 G Steel C	L18, L8	22'-8"	F1	40	34	36	37	22'-0"	F1	40	33	35	37	21'-3"	F1	41	33	35	37	20'-7"	F1	41	33	35	36	20'-1"	F2	42	33	35	36	19'-6"	F2	42	32	34	36
Double 12 G Steel C	L18, L8	28'-0"	F2	43	35	38	39	27'-3"	F2	43	35	37	39	26'-5"	F2	44	35	37	39	25'-7"	F3	44	35	37	38	25'-0"	F3	45	34	36	38	24'-4"	F3	45	34	36	38

Amerimax Exterior Home Products
28921 US Hwy 74
Romoland, CA 92585

Carl Putnam, P. E.
3441 Ivylink Place
Lynchburg, VA 24503
(434) 384-2514
carlputnam@comcast.net

May 27 2017

SECTION 2.0 POST SPACING, POST TYPE AND FOOTING SIZE FOR LATTICE COVER

Ground Snow Load: 0 psf   Live Load: 10 psf   Roof Design Load 10 psf   Wind Speed: 130 MPH EXPOSURE C or 150 MPH EXPOSURE B   Seismic Ss= 150%   Seismic Design Category D   Freestanding or Attached

Table 2.3a

Header	Detail	trib 3'	Min Post Type	Uplift Footing (in)	cubic footing "d" Constrained Footing (in) Max Post Length 8'	10'	12'	trib 3.5'	Min Post Type	Uplift Footing (in)	8'	10'	12'	trib 4'	Min Post Type	Uplift Footing (in)	8'	10'	12'	trib 4.5'	Min Post Type	Uplift Footing (in)	8'	10'	12'	trib 5'	Min Post Type	Uplift Footing (in)	8'	10'	12'	trib 5.5'	Min Post Type	Uplift Footing (in)	8'	10'	12'
On Slab	On Slab	22'-8"	A2					19'-5"	A2					17'-0"	A2					15'-1"	A2					13'-7"	A2					12'-4"	A2				
0.042"x3"x8"	L1	12'-11"	A1	21	31	33	34	12'-0"	A1	22	30	32	34	11'-0"	A1	22	30	32	33	10'-2"	A1	22	29	31	32	9'-8"	A1	23	29	31	32	9'-1"	A1	23	28	30	31
Double 3"x8"	L1, L12	18'-11"	A1	24	34	36	38	17'-8"	A2	25	34	36	37	16'-3"	A2	25	33	35	36	15'-2"	A2	26	32	34	36	14'-5"	A2	26	32	34	35	13'-8"	A2	26	31	33	35
Double 2"x6.625"	L2, L12	16'-9"	A1	23	32	33	35	15'-8"	A1	24	31	33	34	14'-6"	A2	24	30	32	34	13'-6"	A2	25	30	32	33	12'-11"	A2	25	30	31	33	12'-2"	A2	25	29	31	32
16 G Steel C	L18	24'-2"	A2	26	36	38	40	22'-2"	A2	27	36	38	39	20'-1"	A2	27	35	37	38	18'-4"	A2	27	34	36	38	17'-3"	B	28	33	35	37	16'-0"	B	28	33	35	36
14 G Steel C	L18	28'-3"	B	27	38	40	42	26'-1"	C	28	37	39	41	23'-8"	C	28	36	38	40	21'-9"	C	29	35	37	39	20'-6"	C	29	35	37	39	19'-1"	C	29	34	36	38
12 G Steel C	L18	38'-4"	C	30	41	43	45	35'-7"	D	31	40	42	44	32'-7"	D	32	39	42	43	30'-2"	D	32	38	41	43	28'-8"	D	33	38	40	42	26'-10"	D	33	37	40	41
Double 16 G Steel C	L18, L8	40'-0"	D	31	41	44	46	38'-6"	D	32	41	43	45	35'-8"	D	33	40	42	44	33'-4"	D	33	39	42	44	31'-10"	E	34	39	41	43	30'-2"	E	34	38	41	43
Double 14 G Steel C	L18, L8	40'-0"	D	31	41	44	46	40'-0"	D	32	41	44	46	39'-8"	E	34	41	44	46	37'-2"	E	34	41	43	45	35'-7"	E	35	40	42	44	33'-8"	E	36	40	42	44
Double 12 G Steel C	L18, L8	40'-0"	D	31	41	44	46	40'-0"	D	32	41	44	46	40'-0"	E	34	41	44	46	40'-0"	E	35	41	44	46	40'-0"	E	36	41	44	46	40'-0"	F1	38	41	44	46

Header	Detail	trib 6'	Min Post Type	Uplift Footing (in)	cubic footing "d" Constrained Footing (in) Max Post Length 8'	10'	12'	trib 6.5'	Min Post Type	Uplift Footing (in)	8'	10'	12'	trib 7'	Min Post Type	Uplift Footing (in)	8'	10'	12'	trib 7.5'	Min Post Type	Uplift Footing (in)	8'	10'	12'	trib 8'	Min Post Type	Uplift Footing (in)	8'	10'	12'	trib 8.5'	Min Post Type	Uplift Footing (in)	8'	10'	12'
On Slab	On Slab	11'-4"	A2					10'-5"	A1					9'-8"	A2					9'-1"	A2					8'-6"	A2					8'-0"	A2				
0.042"x3"x8"	L1	8'-8"	A1	23	28	30	31	8'-2"	A1	24	28	29	31	7'-11"	A1	24	27	29	30	7'-6"	A1	24	27	29	30	7'-3"	A2	24	27	28	30	6'-11"	A2	24	27	28	29
Double 3"x8"	L1, L12	13'-1"	A2	27	31	33	35	12'-5"	A2	27	31	33	34	12'-0"	A2	27	30	32	34	11'-6"	B	28	30	32	33	11'-2"	C	28	30	32	33	10'-8"	C	28	30	31	33
Double 2"x6.625"	L2, L12	11'-9"	A2	26	29	31	32	11'-2"	A2	26	29	30	32	10'-9"	A2	26	28	30	31	10'-4"	A2	27	28	30	31	10'-0"	A2	27	28	29	31	9'-8"	A2	27	27	29	30
16 G Steel C	L18	15'-3"	C	28	32	34	36	14'-3"	C	28	32	34	35	13'-8"	C	29	31	33	35	12'-11"	C	29	31	33	34	12'-5"	C	29	31	33	34	11'-9"	C	29	30	32	34
14 G Steel C	L18	18'-2"	C	30	34	36	38	17'-2"	C	30	33	35	37	16'-5"	C	30	33	35	37	15'-7"	D	31	33	34	36	15'-0"	D	31	32	34	36	14'-3"	D	31	32	34	35
12 G Steel C	L18	25'-9"	D	33	37	39	41	24'-4"	E	34	36	39	40	23'-5"	E	34	36	38	40	22'-4"	E	34	36	38	40	21'-7"	E	35	35	37	39	20'-8"	E	35	35	37	39
Double 16 G Steel C	L18, L8	29'-0"	E	35	38	40	42	27'-8"	E	35	38	40	42	26'-10"	E	36	37	40	41	25'-9"	E	36	37	39	41	25'-0"	E	36	37	39	41	24'-1"	E	37	36	38	40
Double 14 G Steel C	L18, L8	32'-6"	E	36	39	41	43	31'-0"	E	37	39	41	43	30'-1"	E	37	38	41	43	28'-11"	F1	37	38	40	42	28'-1"	F1	38	38	40	42	27'-1"	F1	38	37	40	41
Double 12 G Steel C	L18, L8	39'-9"	F1	39	41	44	46	38'-0"	F1	39	41	43	45	36'-10"	F1	40	40	43	45	35'-5"	F1	40	40	42	44	34'-6"	F1	41	40	42	44	33'-4"	F1	41	39	42	44

Header	Detail	trib 9'	Min Post Type	Uplift Footing (in)	Footing (in) Max Post Length 8'	10'	12'	trib 10'	Min Post Type	Uplift Footing (in)	8'	10'	12'	trib 11'	Min Post Type	Uplift Footing (in)	8'	10'	12'	trib 12'	Min Post Type	Uplift Footing (in)	8'	10'	12'	trib 13'	Min Post Type	Uplift Footing (in)	8'	10'	12'	trib 14'	Min Post Type	Uplift Footing (in)	8'	10'	12'
On Slab	On Slab	7'-6"	A2					6'-9"	A2					6'-2"	A2					5'-8"	A2					5'-2"	A2					4'-10"	A2				
0.042"x3"x8"	L1	6'-8"	A2	24	27	28	30	6'-2"	A2	25	28	29	31	5'-9"	A2	24	28	30	31	5'-5"	A2	25	29	31	32	5'-2"	A2	24	29	31	33	4'-10"	A2	26	30	32	33
Double 3"x8"	L1, L12	10'-4"	C	28	29	31	32	9'-8"	C	29	29	31	32	9'-2"	C	28	28	30	32	8'-8"	C	29	29	31	32	8'-3"	C	28	29	31	33	7'-11"	C	30	30	32	33
Double 2"x6.625"	L2, L12	9'-4"	A2	27	27	29	30	8'-9"	B	28	28	29	31	8'-4"	C	27	28	30	31	7'-11"	C	29	29	31	32	7'-7"	C	28	29	31	33	7'-3"	C	29	30	32	33
16 G Steel C	L18	11'-0"	C	29	30	32	33	9'-11"	C	29	29	31	32	9'-1"	C	28	28	30	31	8'-4"	C	29	29	31	32	7'-8"	C	28	29	31	33	7'-2"	C	29	30	32	33
14 G Steel C	L18	13'-8"	D	31	31	33	35	12'-8"	D	31	31	33	34	11'-10"	D	30	30	32	34	11'-1"	D	32	30	32	33	10'-5"	D	31	29	31	33	9'-8"	D	32	30	32	33
12 G Steel C	L18	19'-11"	E	35	35	37	38	18'-7"	E	36	34	36	38	17'-6"	E	34	34	35	37	16'-7"	E	36	33	35	37	15'-9"	E	35	33	35	36	15'-0"	E	37	32	34	36
Double 16 G Steel C	L18, L8	23'-3"	E	37	36	38	40	22'-0"	F1	38	36	38	39	20'-11"	F1	37	35	37	39	19'-11"	F1	39	35	37	38	19'-1"	F1	37	34	36	38	18'-4"	F1	40	34	36	38
Double 14 G Steel C	L18, L8	26'-3"	F1	39	37	39	41	24'-11"	F1	39	37	39	41	23'-8"	F1	38	36	38	40	22'-8"	F1	40	36	38	40	21'-9"	F1	39	35	37	39	20'-11"	F1	41	35	37	39
Double 12 G Steel C	L18, L8	32'-3"	F1	41	39	41	43	30'-8"	F2	42	39	41	43	29'-3"	F2	41	38	40	42	28'-0"	F2	43	38	40	42	26'-11"	F2	42	37	40	41	26'-0"	F2	45	37	39	41

Header	Detail	trib 15'	Min Post Type	Uplift Footing (in)	Footing (in) Max Post Length 8'	10'	12'	trib 16'	Min Post Type	Uplift Footing (in)	8'	10'	12'	trib 17'	Min Post Type	Uplift Footing (in)	8'	10'	12'	trib 18'	Min Post Type	Uplift Footing (in)	8'	10'	12'	trib 19'	Min Post Type	Uplift Footing (in)	8'	10'	12'	trib 20'	Min Post Type	Uplift Footing (in)	8'	10'	12'
On Slab	On Slab	4'-6"	A2					4'-3"	A2					4'-0"	A2					3'-9"	A2					3'-7"	A2					3'-4"	A2				
0.042"x3"x8"	L1	4'-7"	A2	26	31	32	34	4'-5"	A2	26	31	33	34	4'-2"	A2	26	32	33	35	4'-0"	A2	26	32	34	35	3'-10"	A2	26	32	34	36	3'-8"	A2	26	33	35	36
Double 3"x8"	L1, L12	7'-7"	C	30	31	32	34	7'-3"	C	30	31	33	34	7'-0"	D	31	32	33	35	6'-8"	D	31	32	34	35	6'-5"	D	31	32	34	36	6'-2"	D	31	33	35	36
Double 2"x6.625"	L2, L12	6'-11"	C	29	31	32	34	6'-8"	C	30	31	33	34	6'-5"	C	30	32	33	35	6'-2"	C	30	32	34	35	6'-0"	C	30	32	34	36	5'-9"	C	30	33	35	36
16 G Steel C	L18	6'-8"	C	29	31	32	34	6'-3"	C	29	31	33	34	5'-11"	C	29	32	33	35	5'-6"	C	29	32	34	35	5'-3"	C	29	32	34	36	5'-0"	C	29	33	35	36
14 G Steel C	L18	9'-0"	D	32	31	32	34	8'-6"	D	32	31	33	34	8'-0"	D	32	32	33	35	7'-6"	D	32	32	34	35	7'-1"	D	32	32	34	36	6'-9"	D	32	33	35	36
12 G Steel C	L18	14'-4"	F1	37	32	34	35	13'-9"	F1	38	32	33	35	13'-3"	F1	38	32	33	35	12'-8"	F1	38	32	34	35	12'-2"	F1	38	32	34	36	11'-9"	F1	39	33	35	36
Double 16 G Steel C	L18, L8	17'-8"	F1	40	34	36	37	17'-0"	F1	40	33	35	37	16'-5"	F1	41	33	35	37	15'-10"	F1	41	33	35	36	15'-4"	F1	41	32	34	36	14'-11"	F1	42	33	35	36
Double 14 G Steel C	L18, L8	20'-2"	F2	42	35	37	39	19'-6"	F2	42	34	36	38	18'-11"	F2	43	34	36	38	18'-3"	F2	43	34	36	38	17'-9"	F2	43	34	36	37	17'-4"	F2	44	33	35	37
Double 12 G Steel C	L18, L8	25'-1"	F3	45	37	39	41	24'-4"	F3	46	36	39	40	23'-7"	F3	46	36	38	40	22'-10"	F3	46	36	38	40	22'-3"	F3	47	36	38	39	21'-8"	F4	47	35	37	39

Ground Snow Load: 0 psf   Live Load: 10 psf   Roof Design Load 10 psf   Wind Speed: 140 MPH EXPOSURE C or 160 MPH EXPOSURE B   Seismic Ss= 150%   Seismic Design Category D   Freestanding or Attached

Table 2.3b

Header	Detail	trib 3'	Min Post Type	Uplift Footing (in)	cubic footing "d" Constrained Footing (in) Max Post Length 8'	10'	12'	trib 3.5'	Min Post Type	Uplift Footing (in)	8'	10'	12'	trib 4'	Min Post Type	Uplift Footing (in)	8'	10'	12'	trib 4.5'	Min Post Type	Uplift Footing (in)	8'	10'	12'	trib 5'	Min Post Type	Uplift Footing (in)	8'	10'	12'	trib 5.5'	Min Post Type	Uplift Footing (in)	8'	10'	12'
On Slab	On Slab	22'-8"	A2					19'-5"	A2					17'-0"	A2					15'-1"	A2					13'-7"	A2					12'-4"	A2				
0.042"x3"x8"	L1	12'-0"	A1	22	32	33	35	11'-0"	A1	22	31	33	34	10'-2"	A1	23	30	32	34	9'-6"	A1	23	30	32	33	8'-11"	A1	23	29	31	33	8'-5"	A1	24	29	31	32
Double 3"x8"	L1, L12	17'-8"	A2	25	35	37	39	16'-3"	A2	25	34	36	38	15'-2"	A2	26	34	36	37	14'-3"	A2	26	33	35	37	13'-5"	A2	27	33	34	36	12'-9"	A2	27	32	34	36
Double 2"x6.625"	L2, L12	15'-8"	A1	24	32	34	36	14'-6"	A2	24	32	33	35	13'-6"	A2	25	31	33	34	12'-8"	A2	25	31	32	34	12'-0"	A2	26	30	32	33	11'-5"	A2	26	30	32	33
16 G Steel C	L18	22'-2"	A2	27	37	39	41	20'-1"	A2	27	36	38	40	18'-4"	A2	28	35	37	39	16'-11"	B	28	35	37	38	15'-9"	C	28	34	36	38	14'-9"	C	28	33	35	37
14 G Steel C	L18	26'-1"	C	28	38	41	43	23'-8"	C	29	38	40	42	21'-9"	C	29	37	39	41	20'-2"	C	30	36	38	40	18'-10"	C	30	35	38	39	17'-8"	C	30	35	37	39
12 G Steel C	L18	35'-7"	D	31	42	44	46	32'-7"	D	32	41	43	45	30'-2"	D	32	40	42	44	28'-2"	D	33	39	42	43	26'-6"	D	33	39	41	43	25'-0"	E	34	38	40	42
Double 16 G Steel C	L18, L8	38'-6"	D	32	42	45	47	35'-8"	D	33	42	44	46	33'-4"	D	34	41	43	45	31'-5"	E	34	40	43	45	29'-9"	E	35	40	42	44	28'-4"	E	35	39	42	44
Double 14 G Steel C	L18, L8	40'-0"	D	32	43	45	48	39'-8"	E	34	43	45	47	37'-2"	E	35	42	45	47	35'-1"	E	35	41	44	46	33'-3"	E	36	41	43	45	31'-9"	E	37	40	43	45
Double 12 G Steel C	L18, L8	40'-0"	D	32	43	45	48	40'-0"	E	34	43	45	48	40'-0"	E	36	43	45	48	40'-0"	E	37	43	45	48	40'-0"	F1	38	43	45	48	38'-10"	F1	39	43	45	47

Header	Detail	trib 6'	Min Post Type	Uplift Footing (in)	cubic footing "d" Constrained Footing (in) Max Post Length 8'	10'	12'	trib 6.5'	Min Post Type	Uplift Footing (in)	8'	10'	12'	trib 7'	Min Post Type	Uplift Footing (in)	8'	10'	12'	trib 7.5'	Min Post Type	Uplift Footing (in)	8'	10'	12'	trib 8'	Min Post Type	Uplift Footing (in)	8'	10'	12'	trib 8.5'	Min Post Type	Uplift Footing (in)	8'	10'	12'
On Slab	On Slab	11'-4"	A2					10'-5"	A2					9'-8"	A2					9'-1"	A2					8'-6"	A2					8'-0"	A2				
0.042"x3"x8"	L1	7'-11"	A1	24	28	30	32	7'-6"	A1	24	28	30	31	7'-2"	A2	24	28	29	31	6'-10"	A2	24	27	29	30	6'-7"	A2	25	27	29	30	6'-4"	A2	25	27	29	30
Double 3"x8"	L1, L12	12'-0"	A2	27	32	33	35	11'-6"	B	28	31	33	35	11'-0"	B	28	31	33	34	10'-7"	C	28	31	32	34	10'-2"	C	29	30	32	34	9'-10"	C	29	30	32	33
Double 2"x6.625"	L2, L12	10'-9"	A2	26	29	31	33	10'-4"	A2	27	29	31	32	9'-11"	A2	27	29	30	32	9'-7"	A2	27	28	30	32	9'-3"	B	28	28	30	31	8'-11"	B	28	28	30	31
16 G Steel C	L18	13'-8"	C	29	33	35	36	12'-11"	C	29	32	34	36	12'-3"	C	29	32	34	35	11'-7"	C	29	31	33	35	10'-10"	C	29	31	33	34	10'-3"	C	29	30	32	34
14 G Steel C	L18	16'-5"	C	30	34	36	38	15'-7"	C	31	34	36	37	14'-10"	D	31	33	35	37	14'-1"	D	31	33	35	37	13'-6"	D	31	33	34	36	12'-11"	D	31	32	34	36
12 G Steel C	L18	23'-5"	E	34	37	40	42	22'-4"	E	35	37	39	41	21'-4"	E	35	37	39	41	20'-6"	E	35	36	38	40	19'-8"	E	35	36	38	40	19'-0"	E	36	36	38	39
Double 16 G Steel C	L18, L8	26'-10"	E	36	39	41	43	25'-9"	E	36	38	41	43	24'-9"	E	37	38	40	42	23'-10"	E	37	38	40	42	23'-1"	E	37	37	39	41	22'-4"	F1	38	37	39	41
Double 14 G Steel C	L18, L8	30'-1"	E	37	40	42	44	28'-11"	F1	38	40	42	44	27'-10"	F1	38	39	41	43	26'-11"	F1	39	39	41	43	26'-0"	F1	39	38	41	43	25'-3"	F1	39	38	40	42
Double 12 G Steel C	L18, L8	36'-10"	F1	40	42	44	47	35'-5"	F1	40	42	44	46	34'-2"	F1	41	41	44	46	33'-1"	F1	41	41	43	45	32'-1"	F1	42	41	43	45	31'-1"	F2	42	40	43	45

Header	Detail	trib 9'	Min Post Type	Uplift Footing (in)	Footing (in) Max Post Length 8'	10'	12'	trib 10'	Min Post Type	Uplift Footing (in)	8'	10'	12'	trib 11'	Min Post Type	Uplift Footing (in)	8'	10'	12'	trib 12'	Min Post Type	Uplift Footing (in)	8'	10'	12'	trib 13'	Min Post Type	Uplift Footing (in)	8'	10'	12'	trib 14'	Min Post Type	Uplift Footing (in)	8'	10'	12'
On Slab	On Slab	7'-6"	A2					6'-9"	A2					6'-2"	A2					5'-8"	A2					5'-2"	A2					4'-10"	A2				
0.042"x3"x8"	L1	6'-1"	A2	25	28	29	31	5'-8"	A2	25	29	30	32	5'-3"	A2	25	29	31	33	4'-11"	A2	26	30	32	33	4'-7"	A2	26	31	32	34	4'-4"	A2	26	31	33	35
Double 3"x8"	L1, L12	9'-6"	C	29	30	32	33	8'-11"	C	29	29	31	33	8'-5"	C	30	29	31	33	7'-11"	C	30	30	32	33	7'-7"	C	30	31	32	34	7'-2"	C	31	31	33	35
Double 2"x6.625"	L2, L12	8'-8"	C	28	28	29	31	8'-2"	C	29	29	30	32	7'-8"	C	29	29	31	33	7'-3"	C	29	30	32	33	6'-11"	C	30	31	32	34	6'-8"	C	30	31	33	35
16 G Steel C	L18	9'-8"	C	29	30	32	33	8'-9"	C	29	29	31	32	7'-11"	C	29	29	31	33	7'-3"	C	29	30	32	33	6'-8"	C	29	31	32	34	6'-3"	C	29	31	33	35
14 G Steel C	L18	12'-5"	D	32	32	34	35	11'-6"	D	32	31	33	35	10'-9"	D	32	31	33	34	9'-9"	D	32	30	32	33	9'-0"	D	32	31	32	34	8'-5"	D	32	31	33	35
12 G Steel C	L18	18'-4"	E	36	35	37	39	17'-1"	E	36	35	37	38	16'-1"	E	37	34	36	38	15'-1"	E	37	34	35	37	14'-4"	E	38	33	35	37	13'-8"	F1	38	33	35	36
Double 16 G Steel C	L18, L8	21'-8"	F1	38	37	39	41	20'-6"	F1	39	36	38	40	19'-5"	F1	39	36	38	40	18'-5"	F1	40	35	37	39	17'-8"	F1	40	35	37	39	16'-11"	F1	41	35	37	38
Double 14 G Steel C	L18, L8	24'-6"	F1	40	38	40	42	23'-3"	F1	40	37	40	41	22'-2"	F1	41	37	39	41	21'-1"	F1	42	36	39	40	20'-2"	F2	42	36	38	40	19'-5"	F2	43	36	38	40
Double 12 G Steel C	L18, L8	30'-3"	F2	43	40	42	44	28'-9"	F2	43	39	42	44	27'-5"	F2	44	39	41	43	26'-1"	F2	45	39	41	43	25'-1"	F3	45	38	40	42	24'-2"	F3	46	38	40	42

Header	Detail	trib 15'	Min Post Type	Uplift Footing (in)	Footing (in) Max Post Length 8'	10'	12'	trib 16'	Min Post Type	Uplift Footing (in)	8'	10'	12'	trib 17'	Min Post Type	Uplift Footing (in)	8'	10'	12'	trib 18'	Min Post Type	Uplift Footing (in)	8'	10'	12'	trib 19'	Min Post Type	Uplift Footing (in)	8'	10'	12'	trib 20'	Min Post Type	Uplift Footing (in)	8'	10'	12'
On Slab	On Slab	4'-6"	A2					4'-3"	A2					4'-0"	A2					3'-9"	A2					3'-7"	A2					3'-4"	A2				
0.042"x3"x8"	L1	4'-2"	A2	26	32	34	35	3'-11"	A2	26	32	34	36	3'-9"	A2	26	33	35	36	3'-7"	A2	26	33	35	37	3'-5"	A2	26	34	36	37	3'-3"	A2	27	34	36	38
Double 3"x8"	L1, L12	6'-11"	D	31	32	34	35	6'-7"	D	31	32	34	36	6'-4"	D	31	33	35	36	6'-1"	D	31	33	35	37	5'-10"	D	32	34	36	37	5'-8"	D	32	34	36	38
Double 2"x6.625"	L2, L12	6'-4"	C	30	32	34	35	6'-1"	C	30	32	34	36	5'-11"	C	31	33	35	36	5'-8"	D	31	33	35	37	5'-6"	D	31	34	36	37	5'-3"	D	31	34	36	38
16 G Steel C	L18	5'-10"	C	29	32	34	35	5'-5"	C	29	32	34	36	5'-2"	C	29	33	35	36	4'-10"	C	29	33	35	37	4'-7"	C	29	34	36	37	4'-4"	C	29	34	36	38
14 G Steel C	L18	7'-10"	D	32	32	34	35	7'-4"	D	32	32	34	36	6'-11"	D	32	33	35	36	6'-6"	D	32	33	35	37	6'-2"	D	32	34	36	37	5'-11"	D	32	34	36	38
12 G Steel C	L18	13'-1"	F1	38	32	34	36	12'-6"	F1	38	32	34	36	12'-0"	F1	39	33	35	36	11'-6"	F1	39	33	35	37	11'-1"	F1	39	34	36	37	10'-9"	F1	39	34	36	38
Double 16 G Steel C	L18, L8	16'-3"	F1	41	34	36	38	15'-8"	F1	41	34	36	38	15'-2"	F1	42	34	36	37	14'-7"	F2	42	33	35	37	14'-2"	F2	42	34	36	37	13'-9"	F2	43	34	36	38
Double 14 G Steel C	L18, L8	18'-9"	F2	43	35	37	39	18'-2"	F2	44	35	37	39	17'-7"	F2	44	35	37	39	17'-0"	F2	44	35	37	38	16'-6"	F2	45	34	36	38	16'-1"	F3	45	34	36	38
Double 12 G Steel C	L18, L8	23'-5"	F3	46	37	40	42	22'-8"	F3	47	37	39	41	22'-0"	F3	47	37	39	41	21'-4"	F4	48	37	39	41	20'-9"	F4	48	36	38	40	20'-3"	F4	49	36	38	40

Ground Snow Load: 0 psf   Live Load: 10 psf   Roof Design Load 10 psf   Wind Speed: 130 MPH EXPOSURE C or 150 MPH EXPOSURE B   Seismic Ss= 150%   Seismic Design Category D   Structures are Attached to Existing Building

Table 2.3c

Header	Detail	trib 3'	Min Post Type	Uplift Footing (in)	cubic footing "d" Constrained Footing (in) Max Post Length 8'	10'	12'	trib 3.5'	Min Post Type	Uplift Footing (in)	8'	10'	12'	trib 4'	Min Post Type	Uplift Footing (in)	8'	10'	12'	trib 4.5'	Min Post Type	Uplift Footing (in)	8'	10'	12'	trib 5'	Min Post Type	Uplift Footing (in)	8'	10'	12'	trib 5.5'	Min Post Type	Uplift Footing (in)	8'	10'	12'
On Slab	On Slab	22'-8"	A1					19'-5"	A1					17'-0"	A1					15'-1"	A1					13'-7"	A1					12'-4"	A1				
0.042"x3"x8"	L1	12'-11"	A1	21	20	21	22	12'-0"	A1	22	21	22	23	11'-0"	A1	22	22	23	24	10'-2"	A1	22	22	24	25	9'-8"	A1	23	23	24	26	9'-1"	A1	23	24	25	26
Double 3"x8"	L1, L12	18'-11"	A1	24	20	21	22	17'-8"	A1	25	21	22	23	16'-3"	A1	25	22	23	24	15'-2"	A1	26	22	24	25	14'-5"	A1	26	23	24	26	13'-8"	A2	26	24	25	26
Double 2"x6.625"	L2, L12	16'-9"	A1	23	20	21	22	15'-8"	A1	24	21	22	23	14'-6"	A1	24	22	23	24	13'-6"	A1	25	22	24	25	12'-11"	A1	25	23	24	26	12'-2"	A1	25	24	25	26
16 G Steel C	L18	24'-2"	A1	26	20	21	22	22'-2"	A2	27	21	22	23	20'-1"	A2	27	22	23	24	18'-4"	A2	27	22	24	25	17'-3"	A2	28	23	24	26	16'-0"	A2	28	24	25	26
14 G Steel C	L18	28'-3"	A2	27	20	21	22	26'-1"	A2	28	21	22	23	23'-8"	A2	28	22	23	24	21'-9"	A2	29	22	24	25	20'-6"	A2	29	23	24	26	19'-1"	A2	29	24	25	26
12 G Steel C	L18	38'-4"	B	30	21	23	24	35'-7"	C	31	22	23	24	32'-7"	C	32	22	23	24	30'-2"	C	32	22	24	25	28'-8"	C	33	23	24	26	26'-10"	C	33	24	25	26
Double 16 G Steel C	L18, L8	40'-0"	C	31	22	23	24	38'-6"	C	32	22	24	25	35'-8"	C	33	23	24	25	33'-4"	C	33	23	24	25	31'-10"	D	34	23	25	26	30'-2"	D	34	24	25	26
Double 14 G Steel C	L18, L8	40'-0"	C	31	22	23	24	40'-0"	C	32	22	24	25	39'-8"	D	34	23	25	26	37'-2"	D	34	24	25	26	35'-7"	D	35	24	25	27	33'-8"	D	36	24	26	27
Double 12 G Steel C	L18, L8	40'-0"	C	31	22	23	24	40'-0"	C	32	22	24	25	40'-0"	D	34	23	25	26	40'-0"	D	35	24	25	27	40'-0"	D	36	25	26	27	40'-0"	E	38	25	27	28

Header	Detail	trib 6'	Min Post Type	Uplift Footing (in)	cubic footing "d" Constrained Footing (in) Max Post Length 8'	10'	12'	trib 6.5'	Min Post Type	Uplift Footing (in)	8'	10'	12'	trib 7'	Min Post Type	Uplift Footing (in)	8'	10'	12'	trib 7.5'	Min Post Type	Uplift Footing (in)	8'	10'	12'	trib 8'	Min Post Type	Uplift Footing (in)	8'	10'	12'	trib 8.5'	Min Post Type	Uplift Footing (in)	8'	10'	12'
On Slab	On Slab	11'-4"	A1					10'-5"	A1					9'-8"	A1					9'-1"	A1					8'-6"	A1					8'-0"	A1				
0.042"x3"x8"	L1	8'-8"	A1	23	24	26	27	8'-2"	A1	24	25	26	27	7'-11"	A1	24	25	27	28	7'-6"	A1	24	26	27	28	7'-3"	A1	24	26	28	29	6'-11"	A1	24	26	28	29
Double 3"x8"	L1, L12	13'-1"	A2	27	24	26	27	12'-5"	A2	27	25	26	27	12'-0"	A2	27	25	27	28	11'-6"	A2	28	26	27	28	11'-2"	A2	28	26	28	29	10'-8"	A2	28	26	28	29
Double 2"x6.625"	L2, L12	11'-9"	A1	26	24	26	27	11'-2"	A1	26	25	26	27	10'-9"	A2	26	25	27	28	10'-4"	A2	27	26	27	28	10'-0"	A2	27	26	28	29	9'-8"	A2	27	26	28	29
16 G Steel C	L18	15'-3"	A2	28	24	26	27	14'-3"	A2	28	25	26	27	13'-8"	A2	29	25	27	28	12'-11"	A2	29	26	27	28	12'-5"	A2	29	26	28	29	11'-9"	A2	29	26	28	29
14 G Steel C	L18	18'-2"	A2	30	24	26	27	17'-2"	B	30	25	26	27	16'-5"	B	30	25	27	28	15'-7"	C	31	26	27	28	15'-0"	C	31	26	28	29	14'-3"	C	31	26	28	29
12 G Steel C	L18	25'-9"	D	33	24	26	27	24'-4"	D	34	25	26	27	23'-5"	D	34	25	27	28	22'-4"	D	34	26	27	28	21'-7"	D	35	26	28	29	20'-8"	D	35	26	28	29
Double 16 G Steel C	L18, L8	29'-0"	D	35	24	26	27	27'-8"	D	35	25	26	27	26'-10"	D	36	25	27	28	25'-9"	D	36	26	27	28	25'-0"	D	36	26	28	29	24'-1"	E	37	26	28	29
Double 14 G Steel C	L18, L8	32'-6"	D	36	24	26	27	31'-0"	E	37	25	26	27	30'-1"	E	37	25	27	28	28'-11"	E	37	26	27	28	28'-1"	E	38	26	28	29	27'-1"	E	38	26	28	29
Double 12 G Steel C	L18, L8	39'-9"	E	39	26	27	29	38'-0"	E	39	26	28	29	36'-10"	E	40	26	28	29	35'-5"	E	40	26	28	29	34'-6"	E	41	27	28	30	33'-4"	F1	41	27	28	30

Header	Detail	trib 9'	Min Post Type	Uplift Footing (in)	Footing (in) Max Post Length 8'	10'	12'	trib 10'	Min Post Type	Uplift Footing (in)	8'	10'	12'	trib 11'	Min Post Type	Uplift Footing (in)	8'	10'	12'	trib 12'	Min Post Type	Uplift Footing (in)	8'	10'	12'	trib 13'	Min Post Type	Uplift Footing (in)	8'	10'	12'	trib 14'	Min Post Type	Uplift Footing (in)	8'	10'	12'
On Slab	On Slab	7'-6"	A2					6'-9"	A2					6'-2"	A2					5'-8"	A2					5'-2"	A2					4'-10"	A2				
0.042"x3"x8"	L1	6'-8"	A2	24	27	28	30	6'-2"	A2	25	28	29	31	5'-9"	A2	25	28	30	31	5'-5"	A2	25	29	31	32	5'-2"	A2	25	29	31	33	4'-10"	A2	26	30	32	33
Double 3"x8"	L1, L12	10'-4"	C	28	29	31	32	9'-8"	C	29	29	31	32	9'-2"	C	29	28	30	32	8'-8"	C	29	29	31	32	8'-3"	C	30	29	31	33	7'-11"	C	30	30	32	33
Double 2"x6.625"	L2, L12	9'-4"	A2	27	27	29	30	8'-9"	B	28	28	29	31	8'-4"	C	28	28	30	31	7'-11"	C	29	29	31	32	7'-7"	C	29	29	31	33	7'-3"	C	29	30	32	33
16 G Steel C	L18	11'-0"	C	29	30	32	33	9'-11"	C	29	29	31	32	9'-1"	C	29	28	30	31	8'-4"	C	29	29	31	32	7'-8"	C	29	29	31	33	7'-2"	C	29	30	32	33
14 G Steel C	L18	13'-8"	D	31	31	33	35	12'-8"	D	31	31	33	34	11'-10"	D	32	30	32	34	11'-1"	D	32	30	32	33	10'-5"	D	32	29	31	33	9'-8"	D	32	30	32	33
12 G Steel C	L18	19'-11"	E	35	35	37	38	18'-7"	E	36	34	36	38	17'-6"	E	36	34	35	37	16'-7"	E	36	33	35	37	15'-9"	E	37	33	35	36	15'-0"	E	37	32	34	36
Double 16 G Steel C	L18, L8	23'-3"	E	37	36	38	40	22'-0"	F1	38	36	38	39	20'-11"	F1	38	35	37	39	19'-11"	F1	39	35	37	38	19'-1"	F1	39	34	36	38	18'-4"	F1	40	34	36	38
Double 14 G Steel C	L18, L8	26'-3"	F1	39	37	39	41	24'-11"	F1	39	37	39	41	23'-8"	F1	40	36	38	40	22'-8"	F1	40	36	38	40	21'-9"	F1	41	35	37	39	20'-11"	F1	41	35	37	39
Double 12 G Steel C	L18, L8	32'-3"	F1	41	39	41	43	30'-8"	F2	42	39	41	43	29'-3"	F2	43	38	40	42	28'-0"	F2	43	38	40	42	26'-11"	F2	44	37	40	41	26'-0"	F2	45	37	39	41

Header	Detail	trib 15'	Min Post Type	Uplift Footing (in)	Footing (in) Max Post Length 8'	10'	12'	trib 16'	Min Post Type	Uplift Footing (in)	8'	10'	12'	trib 17'	Min Post Type	Uplift Footing (in)	8'	10'	12'	trib 18'	Min Post Type	Uplift Footing (in)	8'	10'	12'	trib 19'	Min Post Type	Uplift Footing (in)	8'	10'	12'	trib 20'	Min Post Type	Uplift Footing (in)	8'	10'	12'
On Slab	On Slab	4'-6"	A2					4'-3"	A2					4'-0"	A2					3'-9"	A2					3'-7"	A2					3'-4"	A2				
0.042"x3"x8"	L1	4'-7"	A2	26	31	32	34	4'-5"	A2	26	31	33	34	4'-2"	A2	26	32	33	35	4'-0"	A2	26	32	34	35	3'-10"	A2	26	32	34	36	3'-8"	A2	26	33	35	36
Double 3"x8"	L1, L12	7'-7"	C	30	31	32	34	7'-3"	C	30	31	33	34	7'-0"	D	31	32	33	35	6'-8"	D	31	32	34	35	6'-5"	D	31	32	34	36	6'-2"	D	31	33	35	36
Double 2"x6.625"	L2, L12	6'-11"	C	29	31	32	34	6'-8"	C	30	31	33	34	6'-5"	C	30	32	33	35	6'-2"	C	30	32	34	35	6'-0"	C	30	32	34	36	5'-9"	C	30	33	35	36
16 G Steel C	L18	6'-8"	C	29	31	32	34	6'-3"	C	29	31	33	34	5'-11"	C	29	32	33	35	5'-6"	C	29	32	34	35	5'-3"	C	29	32	34	36	5'-0"	C	29	33	35	36
14 G Steel C	L18	9'-0"	D	32	31	32	34	8'-6"	D	32	31	33	34	8'-0"	D	32	32	33	35	7'-6"	D	32	32	34	35	7'-1"	D	32	32	34	36	6'-9"	D	32	33	35	36
12 G Steel C	L18	14'-4"	F1	37	32	34	35	13'-9"	F1	38	32	33	35	13'-3"	F1	38	32	33	35	12'-8"	F1	38	32	34	35	12'-2"	F1	38	32	34	36	11'-9"	F1	39	33	35	36
Double 16 G Steel C	L18, L8	17'-8"	F1	40	34	36	37	17'-0"	F1	40	33	35	37	16'-5"	F1	41	33	35	37	15'-10"	F1	41	33	35	36	15'-4"	F1	41	32	34	36	14'-11"	F1	42	33	35	36
Double 14 G Steel C	L18, L8	20'-2"	F2	42	35	37	39	19'-6"	F2	42	34	36	38	18'-11"	F2	43	34	36	38	18'-3"	F2	43	34	36	38	17'-9"	F2	43	34	36	37	17'-4"	F2	44	33	35	37
Double 12 G Steel C	L18, L8	25'-1"	F3	45	37	39	41	24'-4"	F3	46	36	39	40	23'-7"	F3	46	36	38	40	22'-10"	F3	46	36	38	40	22'-3"	F3	47	36	38	39	21'-8"	F4	47	35	37	39

Amerimax Exterior Home Products
28921 US Hwy 74
Romoland, CA 92585

Carl Putnam, P. E.
3441 Ivylink Place
Lynchburg, VA 24503
(434) 384-2514
carlputnam@comcast.net

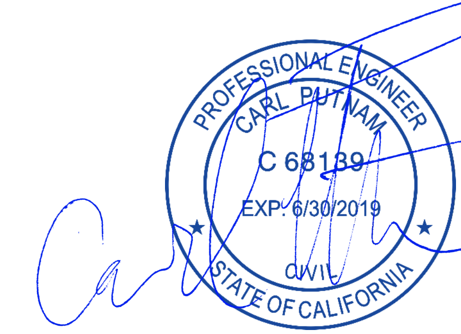

May 27 2017

SECTION 2.0 POST SPACING, POST TYPE AND FOOTING SIZE FOR LATTICE COVER

Ground Snow Load: 0 psf Live Load: 20 psf Roof Design Load 20 psf Wind Speed: 110 MPH EXPOSURE B Seismic Ss= 150% Seismic Design Category D Freestanding or Attached

Table 2.5a (cubic footing "d"; Footing (in) = Constrained Footing (in) by Max Post Length 8', 12', 15')

Header	Detail	trib 3'	Min Post Type	Uplift Footing (in)	8'	12'	15'	trib 3.5'	Min Post Type	Uplift Footing (in)	8'	12'	15'	trib 4'	Min Post Type	Uplift Footing (in)	8'	12'	15'	trib 4.5'	Min Post Type	Uplift Footing (in)	8'	12'	15'
On Slab	On Slab	11'-10"	A1					10'-2"	A1					8'-11"	A1					7'-11"	A1				
0.042"x3"x8"	L1	10'-5"	A1	15	25	27	29	9'-6"	A1	16	24	27	28	8'-8"	A1	16	24	26	28	8'-1"	A1	16	23	26	27
Double 3"x8"	L1, L12	15'-5"	A2	18	27	30	32	14'-3"	A2	18	27	30	31	13'-1"	A2	18	26	29	31	12'-4"	A2	19	26	29	30
Double 2"x6.625"	L2, L12	13'-9"	A2	17	25	28	30	12'-8"	A2	17	25	28	29	11'-9"	A2	18	24	27	29	11'-0"	A2	18	24	27	28
16 G Steel C	L18	18'-9"	A2	19	29	32	34	16'-11"	B	19	28	31	33	15'-3"	C	19	27	30	32	14'-1"	C	20	27	30	31
14 G Steel C	L18	22'-2"	C	20	30	33	35	20'-2"	C	20	29	32	34	18'-2"	C	21	29	32	33	16'-11"	C	21	28	31	33
12 G Steel C	L18	28'-0"	D	22	32	35	37	26'-8"	D	22	31	35	37	25'-6"	D	23	31	34	36	24'-0"	E	23	31	34	36
Double 16 G Steel C	L18, L8	29'-2"	D	22	32	36	38	27'-9"	D	23	32	35	37	26'-6"	E	23	31	35	37	25'-6"	E	24	31	34	36
Double 14 G Steel C	L18, L8	31'-1"	D	22	33	36	38	29'-7"	D	23	32	36	38	28'-4"	E	24	32	35	37	27'-3"	E	24	32	35	37
Double 12 G Steel C	L18, L8	35'-4"	E	23	34	37	40	33'-7"	E	24	33	37	39	32'-2"	E	25	33	37	39	30'-11"	E	25	33	36	38

Header	Detail	trib 5'	Min Post Type	Uplift Footing (in)	8'	12'	15'	trib 5.5'	Min Post Type	Uplift Footing (in)	8'	12'	15'	trib 6'	Min Post Type	Uplift Footing (in)	8'	12'	15'	trib 6.5'	Min Post Type	Uplift Footing (in)	8'	12'	15'
On Slab	On Slab	7'-1"	A1					6'-5"	A1					5'-11"	A1					5'-5"	A1				
0.042"x3"x8"	L1	7'-7"	A1	17	23	25	27	7'-2"	A2	17	23	25	26	6'-8"	A2	17	22	25	26	6'-4"	A2	17	22	24	26
Double 3"x8"	L1, L12	11'-7"	B	19	25	28	30	11'-0"	C	19	25	28	29	10'-5"	C	20	25	27	29	9'-11"	C	20	24	27	29
Double 2"x6.625"	L2, L12	10'-5"	A2	18	24	26	28	9'-11"	A2	19	23	26	27	9'-5"	A2	19	23	26	27	9'-0"	B	19	23	25	27
16 G Steel C	L18	13'-1"	C	20	26	29	31	12'-3"	C	20	26	29	30	11'-2"	C	20	25	28	30	10'-5"	C	20	25	27	29
14 G Steel C	L18	15'-9"	C	21	28	31	32	14'-10"	D	21	27	30	32	13'-10"	D	21	27	30	31	13'-1"	D	22	26	29	31
12 G Steel C	L18	22'-7"	E	24	30	33	35	21'-4"	E	24	30	33	35	20'-1"	E	24	29	32	34	19'-2"	E	25	29	32	34
Double 16 G Steel C	L18, L8	24'-8"	E	24	31	34	36	23'-11"	E	25	31	34	36	23'-3"	E	25	30	34	36	22'-6"	F1	26	30	33	35
Double 14 G Steel C	L18, L8	26'-4"	E	25	31	35	37	25'-6"	E	26	31	34	36	24'-9"	F1	26	31	34	36	24'-2"	F1	26	31	34	36
Double 12 G Steel C	L18, L8	29'-11"	F1	26	32	36	38	29'-0"	F1	27	32	36	38	28'-2"	F1	27	32	35	37	27'-5"	F1	28	32	35	37

Header	Detail	trib 7'	Min Post Type	Uplift Footing (in)	8'	12'	15'	trib 7.5'	Min Post Type	Uplift Footing (in)	8'	12'	15'	trib 8'	Min Post Type	Uplift Footing (in)	8'	12'	15'	trib 8.5'	Min Post Type	Uplift Footing (in)	8'	12'	15'
On Slab	On Slab	5'-1"	A1					4'-9"	A1					4'-5"	A1					4'-2"	A1				
0.042"x3"x8"	L1	6'-1"	A2	17	22	24	25	5'-9"	A2	17	22	24	25	5'-6"	A2	17	22	24	26	5'-3"	A2	17	22	25	26
Double 3"x8"	L1, L12	9'-6"	C	20	24	27	28	9'-2"	C	20	24	27	28	8'-9"	C	20	24	26	28	8'-5"	C	20	23	26	28
Double 2"x6.625"	L2, L12	8'-8"	C	19	23	25	26	8'-4"	C	20	22	25	26	8'-0"	C	20	22	24	26	7'-8"	C	20	22	25	26
16 G Steel C	L18	9'-8"	C	20	24	27	29	9'-1"	C	20	24	27	28	8'-5"	C	20	23	26	28	7'-11"	C	20	23	26	27
14 G Steel C	L18	12'-5"	D	22	26	29	30	11'-10"	D	22	26	28	30	11'-3"	D	22	25	28	30	10'-9"	D	22	25	28	29
12 G Steel C	L18	18'-4"	E	25	29	32	33	17'-6"	E	25	28	31	33	16'-9"	E	25	28	31	33	16'-1"	E	25	28	31	32
Double 16 G Steel C	L18, L8	21'-8"	F1	26	30	33	35	20'-11"	F1	26	30	33	35	20'-1"	F1	27	29	32	34	19'-5"	F1	27	29	32	34
Double 14 G Steel C	L18, L8	23'-7"	F1	27	30	34	36	23'-0"	F1	27	30	34	36	22'-6"	F1	28	30	33	35	22'-1"	F1	28	30	33	35
Double 12 G Steel C	L18, L8	26'-9"	F1	28	31	35	37	26'-2"	F1	29	31	35	37	25'-8"	F2	29	31	35	37	25'-1"	F2	29	31	34	36

Header	Detail	trib 9'	Min Post Type	Uplift Footing (in)	8'	12'	15'	trib 9.5'	Min Post Type	Uplift Footing (in)	8'	12'	15'	trib 10'	Min Post Type	Uplift Footing (in)	8'	12'	15'	trib 11'	Min Post Type	Uplift Footing (in)	8'	12'	15'
On Slab	On Slab	3'-11"	A1					3'-9"	A1					3'-6"	A1					3'-2"	A1				
0.042"x3"x8"	L1	5'-1"	A2	18	23	25	27	4'-10"	A2	18	23	25	27	4'-8"	A2	27	23	26	27	4'-4"	A2	18	24	26	28
Double 3"x8"	L1, L12	8'-2"	C	21	23	26	27	7'-11"	C	21	23	26	27	7'-7"	C	31	23	26	27	7'-2"	C	21	24	26	28
Double 2"x6.625"	L2, L12	7'-5"	C	20	23	25	27	7'-3"	C	20	23	25	27	7'-0"	C	30	23	26	27	6'-7"	C	21	24	26	28
16 G Steel C	L18	7'-6"	C	20	23	25	27	7'-2"	C	20	23	25	27	6'-9"	C	30	23	26	27	6'-2"	C	20	24	26	28
14 G Steel C	L18	10'-2"	D	22	25	27	29	9'-8"	D	22	24	27	29	9'-1"	D	33	24	27	28	8'-4"	D	22	24	26	28
12 G Steel C	L18	15'-7"	E	26	27	30	32	15'-0"	E	26	27	30	32	14'-5"	E	39	27	30	32	13'-7"	F1	26	27	29	31
Double 16 G Steel C	L18, L8	18'-10"	F1	27	29	32	34	18'-4"	F1	27	29	32	34	17'-9"	F1	42	28	31	33	16'-10"	F1	28	28	31	33
Double 14 G Steel C	L18, L8	21'-6"	F1	28	30	33	35	20'-11"	F1	29	30	33	35	20'-4"	F1	43	29	33	34	19'-4"	F2	29	29	32	34
Double 12 G Steel C	L18, L8	24'-8"	F2	30	31	34	36	24'-3"	F2	30	31	34	36	23'-10"	F2	46	31	34	36	23'-1"	F3	31	30	34	36

Header	Detail	trib 12'	Min Post Type	Uplift Footing (in)	8'	12'	15'	trib 13'	Min Post Type	Uplift Footing (in)	8'	12'	15'	trib 14'	Min Post Type	Uplift Footing (in)	8'	12'	15'	trib 15'	Min Post Type	Uplift Footing (in)	8'	12'	15'
On Slab	On Slab	2'-11"	A1					2'-8"	A1					2'-6"	A1					2'-4"	A1				
0.042"x3"x8"	L1	4'-0"	A2	27	24	27	29	3'-9"	A2	18	25	28	29	3'-7"	A2	18	25	28	30	3'-4"	A2	18	26	29	30
Double 3"x8"	L1, L12	6'-9"	D	32	24	27	29	6'-5"	D	21	25	28	29	6'-1"	D	21	25	28	30	5'-9"	D	22	26	29	30
Double 2"x6.625"	L2, L12	6'-3"	C	31	24	27	29	5'-11"	C	21	25	28	29	5'-8"	D	21	25	28	30	5'-5"	D	21	26	29	30
16 G Steel C	L18	5'-7"	C	30	24	27	29	5'-2"	C	20	25	28	29	4'-10"	C	20	25	28	30	4'-6"	C	20	26	29	30
14 G Steel C	L18	7'-7"	D	33	24	27	29	7'-1"	D	22	25	28	29	6'-6"	D	22	25	28	30	6'-1"	D	22	26	29	30
12 G Steel C	L18	12'-9"	F1	40	26	29	31	12'-2"	F1	27	26	29	30	11'-6"	F1	27	25	28	30	11'-0"	F1	27	26	29	30
Double 16 G Steel C	L18, L8	16'-0"	F1	43	28	31	32	15'-3"	F1	29	27	30	32	14'-7"	F2	29	27	30	32	14'-0"	F2	29	27	30	31
Double 14 G Steel C	L18, L8	18'-5"	F2	45	29	32	34	17'-8"	F2	30	28	31	33	17'-0"	F2	30	28	31	33	16'-5"	F2	31	28	31	33
Double 12 G Steel C	L18, L8	22'-5"	F3	48	30	33	35	21'-10"	F3	32	30	33	35	21'-4"	F4	33	30	33	35	20'-7"	F4	33	29	33	35

Header	Detail	trib 16'	Min Post Type	Uplift Footing (in)	8'	12'	15'	trib 17'	Min Post Type	Uplift Footing (in)	8'	12'	15'	trib 18'	Min Post Type	Uplift Footing (in)	8'	12'	15'	trib 19'	Min Post Type	Uplift Footing (in)	8'	12'	15'
On Slab	On Slab	2'-2"	A1					2'-1"	A1					1'-11"	A1					1'-10"	A1				
0.042"x3"x8"	L1	3'-2"	A2	18	26	29	31	3'-0"	A2	18	27	29	31	2'-10"	A2	18	27	30	32	2'-9"	A2	18	27	30	32
Double 3"x8"	L1, L12	5'-6"	D	22	26	29	31	5'-3"	D	22	27	29	31	5'-1"	D	22	27	30	32	4'-10"	D	22	27	30	32
Double 2"x6.625"	L2, L12	5'-2"	D	21	26	29	31	5'-0"	D	22	27	29	31	4'-9"	D	22	27	30	32	4'-7"	D	22	27	30	32
16 G Steel C	L18	4'-3"	C	20	26	29	31	4'-0"	C	20	27	29	31	3'-9"	C	20	27	30	32	3'-7"	C	20	27	30	32
14 G Steel C	L18	5'-8"	D	22	26	29	31	5'-5"	D	22	27	29	31	5'-1"	D	22	27	30	32	4'-10"	D	22	27	30	32
12 G Steel C	L18	10'-6"	F1	27	26	29	31	10'-1"	F1	27	27	29	31	9'-8"	F1	27	27	30	32	9'-4"	F1	28	27	30	32
Double 16 G Steel C	L18, L8	13'-6"	F2	29	26	29	31	13'-0"	F2	30	27	29	31	12'-6"	F2	30	27	30	32	12'-2"	F2	30	27	30	32
Double 14 G Steel C	L18, L8	15'-10"	F3	31	28	31	32	15'-4"	F3	31	27	30	32	14'-10"	F3	32	27	30	32	14'-5"	F3	32	27	30	32
Double 12 G Steel C	L18, L8	19'-11"	F4	34	29	32	34	19'-4"	F4	34	29	32	34	18'-9"	F4	34	29	32	34	18'-3"	F5	35	29	32	34

Ground Snow Load: 0 psf Live Load: 20 psf Roof Design Load 20 psf Wind Speed: 110 MPH EXPOSURE C or 130 MPH EXPOSURE B Seismic Ss= 150% Seismic Design Category D Freestanding or Attached

Table 2.5b (cubic footing "d"; Footing (in) = Constrained Footing (in) by Max Post Length 8', 12', 15')

Header	Detail	trib 3'	Min Post Type	Uplift Footing (in)	8'	12'	15'	trib 3.5'	Min Post Type	Uplift Footing (in)	8'	12'	15'	trib 4'	Min Post Type	Uplift Footing (in)	8'	12'	15'	trib 4.5'	Min Post Type	Uplift Footing (in)	8'	12'	15'
On Slab	On Slab	11'-10"	A1					10'-2"	A1					8'-11"	A1					7'-11"	A1				
0.042"x3"x8"	L1	10'-5"	A1	17	27	30	32	9'-6"	A1	18	26	29	31	8'-8"	A1	18	26	29	30	8'-1"	A1	18	25	28	30
Double 3"x8"	L1, L12	15'-5"	A2	20	30	33	35	14'-3"	A2	20	29	32	34	13'-1"	A2	21	29	32	34	12'-4"	A2	21	28	31	33
Double 2"x6.625"	L2, L12	13'-9"	A2	19	28	31	32	12'-8"	A2	20	27	30	32	11'-9"	A2	20	27	29	31	11'-0"	A2	20	26	29	31
16 G Steel C	L18	18'-9"	A2	21	31	35	37	16'-11"	B	22	31	34	36	15'-3"	C	22	30	33	35	14'-1"	C	22	29	32	34
14 G Steel C	L18	22'-2"	C	22	33	36	38	20'-2"	C	23	32	35	37	18'-2"	C	23	31	34	36	16'-11"	C	23	31	34	36
12 G Steel C	L18	28'-0"	D	24	35	38	41	26'-8"	D	25	34	38	40	25'-6"	D	26	34	38	40	24'-0"	E	26	33	37	39
Double 16 G Steel C	L18, L8	29'-2"	D	25	35	39	41	27'-9"	D	25	35	38	41	26'-6"	E	26	34	38	40	25'-6"	E	27	34	38	40
Double 14 G Steel C	L18, L8	31'-1"	D	25	36	39	42	29'-7"	D	26	35	39	41	28'-4"	E	27	35	39	41	27'-3"	E	28	34	38	40
Double 12 G Steel C	L18, L8	35'-4"	E	26	37	41	43	33'-7"	E	27	36	40	43	32'-2"	E	28	36	40	42	30'-11"	E	29	36	39	42

Header	Detail	trib 5'	Min Post Type	Uplift Footing (in)	8'	12'	15'	trib 5.5'	Min Post Type	Uplift Footing (in)	8'	12'	15'	trib 6'	Min Post Type	Uplift Footing (in)	8'	12'	15'	trib 6.5'	Min Post Type	Uplift Footing (in)	8'	12'	15'
On Slab	On Slab	7'-1"	A1					6'-5"	A1					5'-11"	A1					5'-5"	A1				
0.042"x3"x8"	L1	7'-7"	A1	19	25	28	29	7'-2"	A2	19	25	27	29	6'-8"	A2	19	24	27	28	6'-4"	A2	19	24	26	28
Double 3"x8"	L1, L12	11'-7"	B	21	28	31	33	11'-0"	C	22	27	30	32	10'-5"	C	22	27	30	32	9'-11"	C	22	27	30	31
Double 2"x6.625"	L2, L12	10'-5"	A2	21	26	29	30	9'-11"	A2	21	25	28	30	9'-5"	A2	21	25	28	29	9'-0"	B	22	25	27	29
16 G Steel C	L18	13'-1"	C	22	29	32	34	12'-3"	C	23	28	31	33	11'-2"	C	23	27	30	32	10'-5"	C	23	27	30	32
14 G Steel C	L18	15'-9"	C	24	30	33	35	14'-10"	D	24	30	33	35	13'-10"	D	24	29	32	34	13'-1"	D	24	29	32	34
12 G Steel C	L18	22'-7"	E	27	33	36	39	21'-4"	E	27	32	36	38	20'-1"	E	27	32	35	37	19'-2"	E	28	31	35	37
Double 16 G Steel C	L18, L8	24'-8"	E	28	34	37	39	23'-11"	E	28	33	37	39	23'-3"	E	29	33	37	39	22'-6"	F1	29	33	36	38
Double 14 G Steel C	L18, L8	26'-4"	E	28	34	38	40	25'-6"	E	29	34	38	40	24'-9"	F1	29	34	37	39	24'-2"	F1	30	33	37	39
Double 12 G Steel C	L18, L8	29'-11"	F1	29	35	39	41	29'-0"	F1	30	35	39	41	28'-2"	F1	31	35	39	41	27'-5"	F1	31	35	38	40

Header	Detail	trib 7'	Min Post Type	Uplift Footing (in)	8'	12'	15'	trib 7.5'	Min Post Type	Uplift Footing (in)	8'	12'	15'	trib 8'	Min Post Type	Uplift Footing (in)	8'	12'	15'	trib 8.5'	Min Post Type	Uplift Footing (in)	8'	12'	15'
On Slab	On Slab	5'-1"	A1					4'-9"	A1					4'-5"	A1					4'-2"	A1				
0.042"x3"x8"	L1	6'-1"	A2	19	24	26	28	5'-9"	A2	20	24	26	28	5'-6"	A2	20	24	27	28	5'-3"	A2	20	24	27	29
Double 3"x8"	L1, L12	9'-6"	C	23	26	29	31	9'-2"	C	23	26	29	31	8'-9"	C	23	26	29	30	8'-5"	C	23	26	28	30
Double 2"x6.625"	L2, L12	8'-8"	C	22	25	27	29	8'-4"	C	22	24	27	29	8'-0"	C	22	24	27	28	7'-8"	C	22	24	27	29
16 G Steel C	L18	9'-8"	C	23	26	29	31	9'-1"	C	23	26	29	31	8'-5"	C	23	26	28	30	7'-11"	C	23	25	28	30
14 G Steel C	L18	12'-5"	D	25	28	31	33	11'-10"	D	25	28	31	33	11'-3"	D	25	28	31	32	10'-9"	D	25	27	30	32
12 G Steel C	L18	18'-4"	E	28	31	35	37	17'-6"	E	28	31	34	36	16'-9"	E	28	30	34	36	16'-1"	E	29	30	33	35
Double 16 G Steel C	L18, L8	21'-8"	F1	30	33	36	38	20'-11"	F1	30	32	36	38	20'-1"	F1	30	32	35	37	19'-5"	F1	30	32	35	37
Double 14 G Steel C	L18, L8	23'-7"	F1	30	33	37	39	23'-0"	F1	31	33	37	39	22'-6"	F1	31	33	36	38	22'-1"	F1	32	33	36	38
Double 12 G Steel C	L18, L8	26'-9"	F1	32	34	38	40	26'-2"	F1	32	34	38	40	25'-8"	F2	33	34	38	40	25'-1"	F2	33	34	37	40

Header	Detail	trib 9'	Min Post Type	Uplift Footing (in)	8'	12'	15'	trib 9.5'	Min Post Type	Uplift Footing (in)	8'	12'	15'	trib 10'	Min Post Type	Uplift Footing (in)	8'	12'	15'	trib 11'	Min Post Type	Uplift Footing (in)	8'	12'	15'
On Slab	On Slab	3'-11"	A1					3'-9"	A1					3'-6"	A1					3'-2"	A1				
0.042"x3"x8"	L1	5'-1"	A2	20	25	27	29	4'-10"	A2	20	25	28	29	4'-8"	A2	20	25	28	30	4'-4"	A2	20	26	29	30
Double 3"x8"	L1, L12	8'-2"	C	23	25	28	30	7'-11"	C	23	25	28	30	7'-7"	C	24	25	28	30	7'-2"	C	24	26	29	30
Double 2"x6.625"	L2, L12	7'-5"	C	23	25	27	29	7'-3"	C	23	25	28	29	7'-0"	C	23	25	28	29	6'-7"	C	23	26	29	30
16 G Steel C	L18	7'-6"	C	23	25	28	29	7'-2"	C	23	25	28	29	6'-9"	C	23	25	28	30	6'-2"	C	23	26	29	30
14 G Steel C	L18	10'-2"	D	25	27	30	31	9'-8"	D	25	27	30	31	9'-1"	D	25	26	29	31	8'-4"	D	25	26	29	30
12 G Steel C	L18	15'-7"	E	29	30	33	35	15'-0"	E	29	30	33	35	14'-5"	E	29	29	33	34	13'-7"	F1	29	29	32	34
Double 16 G Steel C	L18, L8	18'-10"	F1	31	31	35	37	18'-4"	F1	31	31	35	37	17'-9"	F1	31	31	34	36	16'-10"	F1	32	30	34	36
Double 14 G Steel C	L18, L8	21'-6"	F1	32	32	36	38	20'-11"	F1	32	32	35	38	20'-4"	F1	33	32	35	38	19'-4"	F2	33	32	35	37
Double 12 G Steel C	L18, L8	24'-8"	F2	34	34	37	39	24'-3"	F2	34	33	37	39	23'-10"	F2	34	33	37	39	23'-1"	F3	35	33	37	39

Header	Detail	trib 12'	Min Post Type	Uplift Footing (in)	8'	12'	15'	trib 13'	Min Post Type	Uplift Footing (in)	8'	12'	15'	trib 14'	Min Post Type	Uplift Footing (in)	8'	12'	15'	trib 15'	Min Post Type	Uplift Footing (in)	8'	12'	15'
On Slab	On Slab	2'-11"	A1					2'-8"	A1					2'-6"	A1					2'-4"	A1				
0.042"x3"x8"	L1	4'-0"	A2	20	27	29	31	3'-9"	A2	20	27	30	32	3'-7"	A2	20	28	31	32	3'-4"	A2	21	28	31	33
Double 3"x8"	L1, L12	6'-9"	D	24	27	29	31	6'-5"	D	24	27	30	32	6'-1"	D	24	28	31	32	5'-9"	D	25	28	31	33
Double 2"x6.625"	L2, L12	6'-3"	C	23	27	29	31	5'-11"	C	24	27	30	32	5'-8"	D	24	28	31	32	5'-5"	D	24	28	31	33
16 G Steel C	L18	5'-7"	C	23	27	29	31	5'-2"	C	23	27	30	32	4'-10"	C	23	28	31	32	4'-6"	C	23	28	31	33
14 G Steel C	L18	7'-7"	D	25	27	29	31	7'-1"	D	25	27	30	32	6'-6"	D	25	28	31	32	6'-1"	D	25	28	31	33
12 G Steel C	L18	12'-9"	F1	30	28	32	33	12'-2"	F1	30	28	31	33	11'-6"	F1	30	28	31	33	11'-0"	F1	30	28	31	33
Double 16 G Steel C	L18, L8	16'-0"	F1	32	30	33	35	15'-3"	F1	32	30	33	35	14'-7"	F2	33	29	33	34	14'-0"	F2	33	29	32	34
Double 14 G Steel C	L18, L8	18'-5"	F2	34	31	35	37	17'-8"	F2	34	31	34	36	17'-0"	F2	34	31	34	36	16'-5"	F2	35	30	34	36
Double 12 G Steel C	L18, L8	22'-5"	F3	36	33	36	38	21'-10"	F3	36	33	36	38	21'-4"	F4	37	32	36	38	20'-7"	F4	38	32	36	38

Header	Detail	trib 16'	Min Post Type	Uplift Footing (in)	8'	12'	15'	trib 17'	Min Post Type	Uplift Footing (in)	8'	12'	15'	trib 18'	Min Post Type	Uplift Footing (in)	8'	12'	15'	trib 19'	Min Post Type	Uplift Footing (in)	8'	12'	15'
On Slab	On Slab	2'-2"	A1					2'-1"	A1					1'-11"	A1					1'-10"	A1				
0.042"x3"x8"	L1	3'-2"	A2	21	29	32	33	3'-0"	A2	21	29	32	34	2'-10"	A2	21	29	33	34	2'-9"	A2	21	30	33	35
Double 3"x8"	L1, L12	5'-6"	D	25	29	32	33	5'-3"	D	25	29	32	34	5'-1"	D	25	29	33	34	4'-10"	D	25	30	33	35
Double 2"x6.625"	L2, L12	5'-2"	D	24	29	32	33	5'-0"	D	24	29	32	34	4'-9"	D	25	29	33	34	4'-7"	D	25	30	33	35
16 G Steel C	L18	4'-3"	C	23	29	32	33	4'-0"	C	23	29	32	34	3'-9"	C	23	29	33	34	3'-7"	C	23	30	33	35
14 G Steel C	L18	5'-8"	D	25	29	32	33	5'-5"	D	25	29	32	34	5'-1"	D	25	29	33	34	4'-10"	D	25	30	33	35
12 G Steel C	L18	10'-6"	F1	31	29	32	33	10'-1"	F1	31	29	32	34	9'-8"	F1	31	29	33	34	9'-4"	F1	31	30	33	35
Double 16 G Steel C	L18, L8	13'-6"	F2	33	29	32	34	13'-0"	F2	34	29	32	34	12'-6"	F2	34	29	33	34	12'-2"	F2	34	30	33	35
Double 14 G Steel C	L18, L8	15'-10"	F3	35	30	33	35	15'-4"	F3	35	30	33	35	14'-10"	F3	36	30	33	35	14'-5"	F3	36	30	33	35
Double 12 G Steel C	L18, L8	19'-11"	F4	38	32	35	37	19'-4"	F4	38	32	35	37	18'-9"	F4	39	31	35	37	18'-3"	F5	39	31	35	37

Ground Snow Load: 0 psf Live Load: 20 psf Roof Design Load 20 psf Wind Speed: 115 MPH EXPOSURE B Seismic Ss= 150% Seismic Design Category D Structures are Attached to Existing Building

Table 2.5c (cubic footing "d"; Footing (in) = Constrained Footing (in) by Max Post Length 8', 12', 15')

Header	Detail	trib 3'	Min Post Type	Uplift Footing (in)	8'	12'	15'	trib 3.5'	Min Post Type	Uplift Footing (in)	8'	12'	15'	trib 4'	Min Post Type	Uplift Footing (in)	8'	12'	15'	trib 4.5'	Min Post Type	Uplift Footing (in)	8'	12'	15'
On Slab	On Slab	11'-10"	A1					10'-2"	A1					8'-11"	A1					7'-11"	A1				
0.042"x3"x8"	L1	10'-5"	A1	16	17	19	21	9'-6"	A1	16	18	20	21	8'-8"	A1	17	19	21	22	8'-1"	A1	17	19	21	23
Double 3"x8"	L1, L12	15'-5"	A2	18	17	19	21	14'-3"	A2	19	18	19	21	13'-1"	A2	19	19	21	22	12'-4"	A2	19	19	21	23
Double 2"x6.625"	L2, L12	13'-9"	A2	18	17	19	21	12'-8"	A2	18	18	20	21	11'-9"	A2	18	19	21	22	11'-0"	A2	19	19	21	23
16 G Steel C	L18	18'-9"	A2	19	18	20	21	16'-11"	B	20	18	20	21	15'-3"	C	20	19	21	22	14'-1"	C	20	19	21	23
14 G Steel C	L18	22'-2"	C	21	19	21	22	20'-2"	C	21	19	21	22	18'-2"	C	21	19	21	22	16'-11"	C	22	19	21	23
12 G Steel C	L18	28'-0"	D	22	20	22	23	26'-8"	D	23	20	22	24	25'-6"	D	24	21	23	24	24'-0"	E	24	21	23	25
Double 16 G Steel C	L18, L8	29'-2"	D	23	20	22	23	27'-9"	D	23	20	23	24	26'-6"	E	24	21	23	25	25'-6"	E	25	21	24	25
Double 14 G Steel C	L18, L8	31'-1"	D	23	20	22	24	29'-7"	D	24	21	23	24	28'-4"	E	25	21	24	25	27'-3"	E	25	22	24	26
Double 12 G Steel C	L18, L8	35'-4"	E	24	21	23	25	33'-7"	E	25	22	24	25	32'-2"	E	26	22	24	26	30'-11"	E	26	22	25	26

Header	Detail	trib 5'	Min Post Type	Uplift Footing (in)	8'	12'	15'	trib 5.5'	Min Post Type	Uplift Footing (in)	8'	12'	15'	trib 6'	Min Post Type	Uplift Footing (in)	8'	12'	15'	trib 6.5'	Min Post Type	Uplift Footing (in)	8'	12'	15'
On Slab	On Slab	7'-1"	A1					6'-5"	A1					5'-11"	A1					5'-5"	A1				
0.042"x3"x8"	L1	7'-7"	A1	17	20	22	23	7'-2"	A2	17	20	23	24	6'-8"	A2	17	21	23	24	6'-4"	A2	18	21	24	25
Double 3"x8"	L1, L12	11'-7"	B	20	20	22	23	11'-0"	C	20	20	23	24	10'-5"	C	20	21	23	24	9'-11"	C	20	21	24	25
Double 2"x6.625"	L2, L12	10'-5"	A2	19	20	22	23	9'-11"	A2	19	20	23	24	9'-5"	A2	19	21	23	24	9'-0"	B	20	21	24	25
16 G Steel C	L18	13'-1"	C	20	20	22	23	12'-3"	C	21	20	23	24	11'-2"	C	21	21	23	24	10'-5"	C	21	21	24	25
14 G Steel C	L18	15'-9"	C	22	20	22	23	14'-10"	D	22	20	23	24	13'-10"	D	22	21	23	24	13'-1"	D	22	21	24	25
12 G Steel C	L18	22'-7"	E	24	21	24	25	21'-4"	E	25	22	24	25	20'-1"	E	25	22	24	25	19'-2"	E	25	22	24	26
Double 16 G Steel C	L18, L8	24'-8"	E	25	22	24	26	23'-11"	E	26	22	25	26	23'-3"	E	26	22	25	26	22'-6"	F1	27	23	25	27
Double 14 G Steel C	L18, L8	26'-4"	E	26	22	25	26	25'-6"	E	26	23	25	26	24'-9"	F1	27	23	25	27	24'-2"	F1	27	23	26	27
Double 12 G Steel C	L18, L8	29'-11"	F1	27	23	25	27	29'-0"	F1	28	23	26	27	28'-2"	F1	28	24	26	28	27'-5"	F1	29	24	27	28

Header	Detail	trib 7'	Min Post Type	Uplift Footing (in)	8'	12'	15'	trib 7.5'	Min Post Type	Uplift Footing (in)	8'	12'	15'	trib 8'	Min Post Type	Uplift Footing (in)	8'	12'	15'	trib 8.5'	Min Post Type	Uplift Footing (in)	8'	12'	15'
On Slab	On Slab	5'-1"	A1					4'-9"	A1					4'-5"	A1					4'-2"	A1				
0.042"x3"x8"	L1	6'-1"	A2	18	22	24	25	5'-9"	A2	18	22	24	26	5'-6"	A2	18	22	25	26	5'-3"	A2	18	23	25	27
Double 3"x8"	L1, L12	9'-6"	C	21	22	24	25	9'-2"	C	21	22	24	26	8'-9"	C	21	22	25	26	8'-5"	C	21	23	25	27
Double 2"x6.625"	L2, L12	8'-8"	C	20	22	24	25	8'-4"	C	20	22	24	26	8'-0"	C	20	22	25	26	7'-8"	C	20	23	25	27
16 G Steel C	L18	9'-8"	C	21	22	24	25	9'-1"	C	21	22	24	26	8'-5"	C	21	22	25	26	7'-11"	C	21	23	25	27
14 G Steel C	L18	12'-5"	D	22	22	24	25	11'-10"	D	23	22	24	26	11'-3"	D	23	22	25	26	10'-9"	D	23	23	25	27
12 G Steel C	L18	18'-4"	E	26	22	24	26	17'-6"	E	26	22	25	26	16'-9"	E	26	22	25	26	16'-1"	E	26	23	25	27
Double 16 G Steel C	L18, L8	21'-8"	F1	27	23	25	27	20'-11"	F1	27	23	26	27	20'-1"	F1	28	23	26	27	19'-5"	F1	28	23	26	28
Double 14 G Steel C	L18, L8	23'-7"	F1	28	23	26	28	23'-0"	F1	28	24	26	28	22'-6"	F1	29	24	27	28	22'-1"	F1	29	24	27	28
Double 12 G Steel C	L18, L8	26'-9"	F1	29	24	27	28	26'-2"	F1	29	25	27	29	25'-8"	F2	30	25	27	29	25'-1"	F2	30	25	28	29

Header	Detail	trib 9'	Min Post Type	Uplift Footing (in)	8'	12'	15'	trib 9.5'	Min Post Type	Uplift Footing (in)	8'	12'	15'	trib 10'	Min Post Type	Uplift Footing (in)	8'	12'	15'	trib 11'	Min Post Type	Uplift Footing (in)	8'	12'	15'
On Slab	On Slab	3'-11"	A1					3'-9"	A1					3'-6"	A1					3'-2"	A1				
0.042"x3"x8"	L1	5'-1"	A2	18	23	26	27	4'-10"	A2	18	23	26	28	4'-8"	A2	18	24	26	28	4'-4"	A2	18	24	27	29
Double 3"x8"	L1, L12	8'-2"	C	21	24	26	28	7'-11"	C	21	24	26	28	7'-7"	C	22	24	26	28	7'-2"	C	22	24	26	28
Double 2"x6.625"	L2, L12	7'-5"	C	21	23	26	27	7'-3"	C	21	23	26	28	7'-0"	C	21	24	26	28	6'-7"	C	21	24	27	29
16 G Steel C	L18	7'-6"	C	21	23	26	27	7'-2"	C	21	23	26	28	6'-9"	C	21	24	26	28	6'-2"	C	21	24	27	29
14 G Steel C	L18	10'-2"	D	23	25	28	30	9'-8"	D	23	25	28	29	9'-1"	D	23	25	27	29	8'-4"	D	23	24	27	29
12 G Steel C	L18	15'-7"	E	26	28	31	33	15'-0"	E	27	28	31	32	14'-5"	E	27	28	31	32	13'-7"	F1	27	27	30	32
Double 16 G Steel C	L18, L8	18'-10"	F1	28	29	33	35	18'-4"	F1	28	29	32	34	17'-9"	F1	29	29	32	34	16'-10"	F1	29	29	32	34
Double 14 G Steel C	L18, L8	21'-6"	F1	29	30	34	36	20'-11"	F1	30	30	34	35	20'-4"	F1	30	30	33	35	19'-4"	F2	30	30	33	35
Double 12 G Steel C	L18, L8	24'-8"	F2	31	32	35	37	24'-3"	F2	31	31	35	37	23'-10"	F2	31	31	35	37	23'-1"	F3	32	31	34	36

Header	Detail	trib 12'	Min Post Type	Uplift Footing (in)	8'	12'	15'	trib 13'	Min Post Type	Uplift Footing (in)	8'	12'	15'	trib 14'	Min Post Type	Uplift Footing (in)	8'	12'	15'	trib 15'	Min Post Type	Uplift Footing (in)	8'	12'	15'
On Slab	On Slab	2'-11"	A1					2'-8"	A1					2'-6"	A1					2'-4"	A1				
0.042"x3"x8"	L1	4'-0"	A2	19	25	28	29	3'-9"	A2	19	25	28	30	3'-7"	A2	19	26	29	30	3'-4"	A2	19	26	29	31
Double 3"x8"	L1, L12	6'-9"	D	22	25	28	29	6'-5"	D	22	25	28	30	6'-1"	D	22	26	29	30	5'-9"	D	23	26	29	31
Double 2"x6.625"	L2, L12	6'-3"	C	21	25	28	29	5'-11"	C	21	25	28	30	5'-8"	D	21	26	29	30	5'-5"	D	22	26	29	31
16 G Steel C	L18	5'-7"	C	21	25	28	29	5'-2"	C	21	25	28	30	4'-10"	C	21	26	29	30	4'-6"	C	21	26	29	31
14 G Steel C	L18	7'-7"	D	23	25	28	29	7'-1"	D	23	25	28	30	6'-6"	D	23	26	29	30	6'-1"	D	23	26	29	31
12 G Steel C	L18	12'-9"	F1	27	27	30	31	12'-2"	F1	27	26	29	31	11'-6"	F1	28	26	29	31	11'-0"	F1	28	26	29	31
Double 16 G Steel C	L18, L8	16'-0"	F1	29	28	31	33	15'-3"	F1	30	28	31	33	14'-7"	F2	30	28	31	33	14'-0"	F2	30	27	30	32
Double 14 G Steel C	L18, L8	18'-5"	F2	31	29	32	34	17'-8"	F2	31	29	32	34	17'-0"	F2	31	29	32	34	16'-5"	F2	32	28	31	33
Double 12 G Steel C	L18, L8	22'-5"	F3	33	31	34	36	21'-10"	F3	33	31	34	36	21'-4"	F4	34	30	34	36	20'-7"	F4	34	30	33	35

Header	Detail	trib 16'	Min Post Type	Uplift Footing (in)	8'	12'	15'	trib 17'	Min Post Type	Uplift Footing (in)	8'	12'	15'	trib 18'	Min Post Type	Uplift Footing (in)	8'	12'	15'	trib 19'	Min Post Type	Uplift Footing (in)	8'	12'	15'
On Slab	On Slab	2'-2"	A1					2'-1"	A1					1'-11"	A1					1'-10"	A1				
0.042"x3"x8"	L1	3'-2"	A2	19	27	30	31	3'-0"	A2	19	27	30	32	2'-10"	A2	19	28	31	32	2'-9"	A2	19	28	31	33
Double 3"x8"	L1, L12	5'-6"	D	23	27	30	31	5'-3"	D	23	27	30	32	5'-1"	D	23	28	31	32	4'-10"	D	23	28	31	33
Double 2"x6.625"	L2, L12	5'-2"	D	22	27	30	31	5'-0"	D	22	27	30	32	4'-9"	D	22	28	31	32	4'-7"	D	22	28	31	33
16 G Steel C	L18	4'-3"	C	21	27	30	31	4'-0"	C	21	27	30	32	3'-9"	C	21	28	31	32	3'-7"	C	21	28	31	33
14 G Steel C	L18	5'-8"	D	23	27	30	31	5'-5"	D	23	27	30	32	5'-1"	D	23	28	31	32	4'-10"	D	23	28	31	33
12 G Steel C	L18	10'-6"	F1	28	27	30	31	10'-1"	F1	28	27	30	32	9'-8"	F1	28	28	31	32	9'-4"	F1	29	28	31	33
Double 16 G Steel C	L18, L8	13'-6"	F2	30	27	30	32	13'-0"	F2	31	27	30	32	12'-6"	F2	31	28	31	32	12'-2"	F2	31	28	31	33
Double 14 G Steel C	L18, L8	15'-10"	F3	32	28	31	33	15'-4"	F3	32	28	31	33	14'-10"	F3	33	28	31	33	14'-5"	F3	33	28	31	33
Double 12 G Steel C	L18, L8	19'-11"	F4	35	30	33	35	19'-4"	F4	35	30	33	35	18'-9"	F4	35	29	33	35	18'-3"	F5	36	29	32	34

Amerimax Exterior Home Products
28921 US Hwy 74
Romoland, CA 92585

Carl Putnam, P. E.
3441 Ivylink Place
Lynchburg, VA 24503
(434) 384-2514
carlputnam@comcast.net

PROFESSIONAL ENGINEER CARL PUTNAM C 68139 EXP. 6/30/2019 CIVIL STATE OF CALIFORNIA

SECTION 2.0 POST SPACING, POST TYPE AND FOOTING SIZE FOR LATTICE COVER

Ground Snow Load: 0 psf Live Load: 20 psf Roof Design Load 20 psf Wind Speed: 115 MPH EXPOSURE B Seismic Ss= 150% Seismic Design Category D Freestanding or Attached

Table 2.6a (cubic footing "d"; Constrained Footing (in) Max Post Length 8', 12', 15')

Header	Detail	trib 3'	Min Post Type	Uplift Footing (in)	8'	12'	15'	trib 3.5'	Min Post Type	Uplift Footing (in)	8'	12'	15'	trib 4'	Min Post Type	Uplift Footing (in)	8'	12'	15'	trib 4.5'	Min Post Type	Uplift Footing (in)	8'	12'	15'	trib 5'	Min Post Type	Uplift Footing (in)	8'	12'	15'
On Slab	On Slab	11'-10"	A1					10'-2"	A1					8'-11"	A1					7'-11"	A1					7'-1"	A1				
0.042"x3"x8"	L1	10'-5"	A1	16	25	28	30	9'-6"	A1	16	25	27	29	8'-8"	A1	17	24	27	28	8'-1"	A1	17	24	26	28	7'-7"	A1	17	23	26	27
Double 3"x8"	L1, L12	15'-5"	A2	18	28	31	33	14'-3"	A2	19	27	30	32	13'-1"	A2	19	27	30	32	12'-4"	A2	19	26	29	31	11'-7"	B	20	26	29	31
Double 2"x6.625"	L2, L12	13'-9"	A2	18	26	29	30	12'-8"	A2	18	25	28	30	11'-9"	A2	18	25	28	29	11'-0"	A2	19	25	27	29	10'-5"	A2	19	24	27	28
16 G Steel C	L18	18'-9"	A2	19	29	33	35	16'-11"	B	20	29	32	34	15'-3"	C	20	28	31	33	14'-1"	C	20	27	30	32	13'-1"	C	20	27	30	32
14 G Steel C	L18	22'-2"	C	21	31	34	36	20'-2"	C	21	30	33	35	18'-2"	C	21	29	32	34	16'-11"	C	22	29	32	34	15'-9"	C	22	28	31	33
12 G Steel C	L18	28'-0"	D	22	33	36	38	26'-8"	D	23	32	36	38	25'-6"	D	24	32	35	37	24'-0"	E	24	31	35	37	22'-7"	E	25	31	34	36
Double 16 G Steel C	L18, L8	29'-2"	D	23	33	36	39	27'-9"	D	23	32	36	38	26'-6"	E	24	32	36	38	25'-6"	E	25	32	35	37	24'-8"	E	25	32	35	37
Double 14 G Steel C	L18, L8	31'-1"	D	23	33	37	39	29'-7"	D	24	33	37	39	28'-4"	E	25	33	36	38	27'-3"	E	25	32	36	38	26'-4"	E	26	32	36	38
Double 12 G Steel C	L18, L8	35'-4"	E	24	35	38	41	33'-7"	E	25	34	38	40	32'-2"	E	26	34	37	40	30'-11"	E	26	33	37	39	29'-11"	F1	27	33	37	39

Header	Detail	trib 5.5'	Min Post Type	Uplift Footing (in)	8'	12'	15'	trib 6'	Min Post Type	Uplift Footing (in)	8'	12'	15'	trib 6.5'	Min Post Type	Uplift Footing (in)	8'	12'	15'	trib 7'	Min Post Type	Uplift Footing (in)	8'	12'	15'	trib 7.5'	Min Post Type	Uplift Footing (in)	8'	12'	15'
On Slab	On Slab	6'-5"	A1					5'-11"	A1					5'-5"	A1					5'-1"	A1					4'-9"	A1				
0.042"x3"x8"	L1	7'-2"	A2	17	23	26	27	6'-8"	A2	17	23	25	27	6'-4"	A2	18	22	25	26	6'-1"	A2	18	22	24	26	5'-9"	A2	18	22	24	26
Double 3"x8"	L1, L12	11'-0"	C	20	26	29	30	10'-5"	C	20	25	28	30	9'-11"	C	20	25	28	29	9'-6"	C	21	25	27	29	9'-2"	C	21	25	27	29
Double 2"x6.625"	L2, L12	9'-11"	A2	19	24	26	28	9'-5"	A2	19	24	26	28	9'-0"	B	20	23	26	27	8'-8"	C	20	23	26	27	8'-4"	C	20	23	25	27
16 G Steel C	L18	12'-3"	C	21	26	29	31	11'-2"	C	21	26	29	30	10'-5"	C	21	25	28	30	9'-8"	C	21	25	28	29	9'-1"	C	21	24	27	29
14 G Steel C	L18	14'-10"	D	22	28	31	33	13'-10"	D	22	27	30	32	13'-1"	D	22	27	30	32	12'-5"	D	22	27	29	31	11'-10"	D	23	26	29	31
12 G Steel C	L18	21'-4"	E	25	30	34	36	20'-1"	E	25	30	33	35	19'-2"	E	25	30	33	35	18'-4"	E	26	29	32	34	17'-6"	E	26	29	32	34
Double 16 G Steel C	L18, L8	23'-11"	E	26	31	35	37	23'-3"	E	26	31	34	36	22'-6"	F1	27	31	34	36	21'-8"	F1	27	31	34	36	20'-11"	F1	27	30	34	35
Double 14 G Steel C	L18, L8	25'-6"	E	26	32	35	37	24'-9"	F1	27	32	35	37	24'-2"	F1	27	31	35	37	23'-7"	F1	28	31	35	37	23'-0"	F1	28	31	34	36
Double 12 G Steel C	L18, L8	29'-0"	F1	28	33	36	39	28'-2"	F1	28	33	36	38	27'-5"	F1	29	32	36	38	26'-9"	F1	29	32	36	38	26'-2"	F1	29	32	35	38

Header	Detail	trib 8'	Min Post Type	Uplift Footing (in)	8'	12'	15'	trib 8.5'	Min Post Type	Uplift Footing (in)	8'	12'	15'
On Slab	On Slab	4'-5"	A1					4'-2"	A1				
0.042"x3"x8"	L1	5'-6"	A2	18	22	25	26	5'-3"	A2	18	23	25	27
Double 3"x8"	L1, L12	8'-9"	C	21	24	27	28	8'-5"	C	21	24	27	28
Double 2"x6.625"	L2, L12	8'-0"	C	20	23	25	26	7'-8"	C	20	23	25	27
16 G Steel C	L18	8'-5"	C	21	24	27	28	7'-11"	C	21	24	26	28
14 G Steel C	L18	11'-3"	D	23	26	29	30	10'-9"	D	23	26	28	30
12 G Steel C	L18	16'-9"	E	26	29	32	34	16'-1"	E	26	28	31	33
Double 16 G Steel C	L18, L8	20'-1"	F1	28	30	33	35	19'-5"	F1	28	30	33	35
Double 14 G Steel C	L18, L8	22'-6"	F1	29	31	34	36	22'-1"	F1	29	31	34	36
Double 12 G Steel C	L18, L8	25'-8"	F2	30	32	35	37	25'-1"	F2	30	32	35	37

Header	Detail	trib 9'	Min Post Type	Uplift Footing (in)	8'	12'	15'	trib 9.5'	Min Post Type	Uplift Footing (in)	8'	12'	15'	trib 10'	Min Post Type	Uplift Footing (in)	8'	12'	15'	trib 11'	Min Post Type	Uplift Footing (in)	8'	12'	15'	trib 12'	Min Post Type	Uplift Footing (in)	8'	12'	15'
On Slab	On Slab	3'-11"	A1					3'-9"	A1					3'-6"	A1					3'-2"	A1					2'-11"	A1				
0.042"x3"x8"	L1	5'-1"	A2	18	23	26	27	4'-10"	A2	18	23	26	28	4'-8"	A2	27	24	26	28	4'-4"	A2	18	24	27	29	4'-0"	A2	27	25	28	29
Double 3"x8"	L1, L12	8'-2"	C	21	24	26	28	7'-11"	C	21	24	26	28	7'-7"	C	31	24	26	28	7'-2"	C	22	24	27	29	6'-9"	D	32	25	28	29
Double 2"x6.625"	L2, L12	7'-5"	C	21	23	26	27	7'-3"	C	21	23	26	28	7'-0"	C	30	24	26	28	6'-7"	C	21	24	27	29	6'-3"	C	31	25	28	29
16 G Steel C	L18	7'-6"	C	21	23	26	27	7'-2"	C	21	23	26	28	6'-9"	C	30	24	26	28	6'-2"	C	21	24	27	29	5'-7"	C	30	25	28	29
14 G Steel C	L18	10'-2"	D	23	25	28	30	9'-8"	D	23	25	28	29	9'-1"	D	33	25	27	29	8'-4"	D	23	24	27	29	7'-7"	D	33	25	28	29
12 G Steel C	L18	15'-7"	E	26	28	31	33	15'-0"	E	27	28	31	33	14'-5"	E	39	28	31	32	13'-7"	F1	27	27	30	32	12'-9"	F1	40	27	30	31
Double 16 G Steel C	L18, L8	18'-10"	F1	28	29	33	35	18'-4"	F1	28	29	32	34	17'-9"	F1	42	29	32	34	16'-10"	F1	29	29	32	34	16'-0"	F1	43	28	31	33
Double 14 G Steel C	L18, L8	21'-6"	F1	29	30	34	36	20'-11"	F1	30	30	34	35	20'-4"	F1	43	30	33	35	19'-4"	F2	30	30	33	35	18'-5"	F2	45	29	32	34
Double 12 G Steel C	L18, L8	24'-8"	F2	31	32	35	37	24'-3"	F2	31	31	35	37	23'-10"	F2	46	31	35	37	23'-1"	F3	32	31	34	36	22'-5"	F3	48	31	34	36

Header	Detail	trib 13'	Min Post Type	Uplift Footing (in)	8'	12'	15'	trib 14'	Min Post Type	Uplift Footing (in)	8'	12'	15'	trib 15'	Min Post Type	Uplift Footing (in)	8'	12'	15'	trib 16'	Min Post Type	Uplift Footing (in)	8'	12'	15'	trib 17'	Min Post Type	Uplift Footing (in)	8'	12'	15'
On Slab	On Slab	2'-8"	A1					2'-6"	A1					2'-4"	A1					2'-2"	A1					2'-1"	A1				
0.042"x3"x8"	L1	3'-9"	A2	19	25	28	30	3'-7"	A2	19	26	29	30	3'-4"	A2	19	26	29	31	3'-2"	A2	19	27	30	31	3'-0"	A2	19	27	30	32
Double 3"x8"	L1, L12	6'-5"	D	22	25	28	30	6'-1"	D	22	26	29	30	5'-9"	D	23	26	29	31	5'-6"	D	23	27	30	31	5'-3"	D	23	27	30	32
Double 2"x6.625"	L2, L12	5'-11"	C	22	25	28	30	5'-8"	D	22	26	29	30	5'-5"	D	22	26	29	31	5'-2"	D	22	27	30	31	5'-0"	D	22	27	30	32
16 G Steel C	L18	5'-2"	C	21	25	28	30	4'-10"	C	21	26	29	30	4'-6"	C	21	26	29	31	4'-3"	C	21	27	30	31	4'-0"	C	21	27	30	32
14 G Steel C	L18	7'-1"	D	23	25	28	30	6'-6"	D	23	26	29	30	6'-1"	D	23	26	29	31	5'-8"	D	23	27	30	31	5'-5"	D	23	27	30	32
12 G Steel C	L18	12'-2"	F1	27	26	29	31	11'-6"	F1	28	26	29	31	11'-0"	F1	28	26	29	31	10'-6"	F1	28	27	30	31	10'-1"	F1	28	27	30	32
Double 16 G Steel C	L18, L8	15'-3"	F1	30	28	31	33	14'-7"	F2	30	28	31	32	14'-0"	F2	30	27	30	32	13'-6"	F2	30	27	30	32	13'-0"	F2	31	27	30	32
Double 14 G Steel C	L18, L8	17'-8"	F2	31	29	32	34	17'-0"	F2	31	29	32	34	16'-5"	F2	32	28	32	33	15'-10"	F3	32	28	31	33	15'-4"	F3	32	28	31	33
Double 12 G Steel C	L18, L8	21'-10"	F3	33	31	34	36	21'-4"	F4	34	30	34	36	20'-7"	F4	34	30	33	35	19'-11"	F4	35	30	33	35	19'-4"	F4	35	30	33	35

Header	Detail	trib 18'	Min Post Type	Uplift Footing (in)	8'	12'	15'	trib 19'	Min Post Type	Uplift Footing (in)	8'	12'	15'
On Slab	On Slab	1'-11"	A1					1'-10"	A1				
0.042"x3"x8"	L1	2'-10"	A2	19	28	31	32	2'-9"	A2	19	28	31	33
Double 3"x8"	L1, L12	5'-1"	D	23	28	31	32	4'-10"	D	23	28	31	33
Double 2"x6.625"	L2, L12	4'-9"	D	22	28	31	32	4'-7"	D	23	28	31	33
16 G Steel C	L18	3'-9"	C	21	28	31	32	3'-7"	C	21	28	31	33
14 G Steel C	L18	5'-1"	D	23	28	31	32	4'-10"	D	23	28	31	33
12 G Steel C	L18	9'-8"	F1	28	28	31	32	9'-4"	F1	29	28	31	33
Double 16 G Steel C	L18, L8	12'-6"	F2	31	28	31	32	12'-2"	F2	31	28	31	33
Double 14 G Steel C	L18, L8	14'-10"	F3	33	28	31	33	14'-5"	F3	33	28	31	33
Double 12 G Steel C	L18, L8	18'-9"	F4	35	29	33	35	18'-3"	F5	36	29	32	34

Ground Snow Load: 0 psf Live Load: 20 psf Roof Design Load 20 psf Wind Speed: 115 MPH EXPOSURE C or 130 MPH EXPOSURE B Seismic Ss= 150% Seismic Design Category D Freestanding or Attached

Table 2.6b (cubic footing "d"; Constrained Footing (in) Max Post Length 8', 12', 15')

Header	Detail	trib 3'	Min Post Type	Uplift Footing (in)	8'	12'	15'	trib 3.5'	Min Post Type	Uplift Footing (in)	8'	12'	15'	trib 4'	Min Post Type	Uplift Footing (in)	8'	12'	15'	trib 4.5'	Min Post Type	Uplift Footing (in)	8'	12'	15'	trib 5'	Min Post Type	Uplift Footing (in)	8'	12'	15'
On Slab	On Slab	11'-10"	A1					10'-2"	A1					8'-11"	A1					7'-11"	A1					7'-1"	A1				
0.042"x3"x8"	L1	10'-5"	A1	18	28	31	32	9'-6"	A1	18	27	30	32	8'-8"	A1	19	26	29	31	8'-1"	A1	19	26	29	30	7'-7"	A1	19	25	28	30
Double 3"x8"	L1, L12	15'-5"	A2	21	31	34	36	14'-3"	A2	21	30	33	35	13'-1"	A2	21	29	32	34	12'-4"	A2	22	29	32	34	11'-7"	B	22	28	31	33
Double 2"x6.625"	L2, L12	13'-9"	A2	20	28	31	33	12'-8"	A2	20	28	31	32	11'-9"	A2	21	27	30	32	11'-0"	A2	21	27	30	31	10'-5"	A2	21	26	29	31
16 G Steel C	L18	18'-9"	A2	22	32	36	38	16'-11"	B	22	31	35	37	15'-3"	C	23	30	34	36	14'-1"	C	23	30	33	35	13'-1"	C	23	29	32	34
14 G Steel C	L18	22'-2"	C	23	33	37	39	20'-2"	C	24	33	36	38	18'-2"	C	24	32	35	37	16'-11"	C	24	31	35	37	15'-9"	C	25	31	34	36
12 G Steel C	L18	28'-0"	D	25	35	39	42	26'-8"	D	26	35	39	41	25'-6"	D	27	35	38	41	24'-0"	E	27	34	38	40	22'-7"	E	28	34	37	39
Double 16 G Steel C	L18, L8	29'-2"	D	25	36	40	42	27'-9"	D	26	35	39	41	26'-6"	E	27	35	39	41	25'-6"	E	28	35	38	41	24'-8"	E	28	34	38	40
Double 14 G Steel C	L18, L8	31'-1"	D	26	36	40	43	29'-7"	D	27	36	40	42	28'-4"	E	28	36	39	42	27'-3"	E	28	35	39	41	26'-4"	E	29	35	39	41
Double 12 G Steel C	L18, L8	35'-4"	E	27	38	42	44	33'-7"	E	28	37	41	44	32'-2"	E	29	37	41	43	30'-11"	E	30	36	40	43	29'-11"	F1	30	36	40	42

Header	Detail	trib 5.5'	Min Post Type	Uplift Footing (in)	8'	12'	15'	trib 6'	Min Post Type	Uplift Footing (in)	8'	12'	15'	trib 6.5'	Min Post Type	Uplift Footing (in)	8'	12'	15'	trib 7'	Min Post Type	Uplift Footing (in)	8'	12'	15'	trib 7.5'	Min Post Type	Uplift Footing (in)	8'	12'	15'
On Slab	On Slab	6'-5"	A1					5'-11"	A1					5'-5"	A1					5'-1"	A1					4'-9"	A1				
0.042"x3"x8"	L1	7'-2"	A2	20	25	28	29	6'-8"	A2	20	25	27	29	6'-4"	A2	20	24	27	29	6'-1"	A2	20	24	27	28	5'-9"	A2	20	24	27	28
Double 3"x8"	L1, L12	11'-0"	C	23	28	31	33	10'-5"	C	23	28	31	32	9'-11"	C	23	27	30	32	9'-6"	C	23	27	30	32	9'-2"	C	23	27	30	31
Double 2"x6.625"	L2, L12	9'-11"	A2	22	26	29	31	9'-5"	A2	22	26	28	30	9'-0"	B	22	25	28	30	8'-8"	C	22	25	28	29	8'-4"	C	23	25	28	29
16 G Steel C	L18	12'-3"	C	23	29	32	34	11'-2"	C	23	28	31	33	10'-5"	C	23	28	31	32	9'-8"	C	23	27	30	32	9'-1"	C	23	27	30	31
14 G Steel C	L18	14'-10"	D	25	30	33	35	13'-10"	D	25	30	33	35	13'-1"	D	25	29	32	34	12'-5"	D	25	29	32	34	11'-10"	D	26	29	32	33
12 G Steel C	L18	21'-4"	E	28	33	37	39	20'-1"	E	28	33	36	38	19'-2"	E	29	32	36	38	18'-4"	E	29	32	35	37	17'-6"	E	29	32	35	37
Double 16 G Steel C	L18, L8	23'-11"	E	29	34	38	40	23'-3"	E	30	34	38	40	22'-6"	F1	30	34	37	39	21'-8"	F1	31	33	37	39	20'-11"	F1	31	33	37	39
Double 14 G Steel C	L18, L8	25'-6"	E	30	35	38	41	24'-9"	F1	30	34	38	40	24'-2"	F1	31	34	38	40	23'-7"	F1	31	34	38	40	23'-0"	F1	32	34	37	40
Double 12 G Steel C	L18, L8	29'-0"	F1	31	36	40	42	28'-2"	F1	32	36	39	42	27'-5"	F1	32	35	39	41	26'-9"	F1	33	35	39	41	26'-2"	F1	33	35	39	41

Header	Detail	trib 8'	Min Post Type	Uplift Footing (in)	8'	12'	15'	trib 8.5'	Min Post Type	Uplift Footing (in)	8'	12'	15'
On Slab	On Slab	4'-5"	A1					4'-2"	A1				
0.042"x3"x8"	L1	5'-6"	A2	20	24	27	29	5'-3"	A2	20	25	28	29
Double 3"x8"	L1, L12	8'-9"	C	24	26	29	31	8'-5"	C	24	26	29	31
Double 2"x6.625"	L2, L12	8'-0"	C	23	25	27	29	7'-8"	C	23	25	28	29
16 G Steel C	L18	8'-5"	C	23	26	29	31	7'-11"	C	23	26	29	30
14 G Steel C	L18	11'-3"	D	26	28	31	33	10'-9"	D	26	28	31	33
12 G Steel C	L18	16'-9"	E	29	31	35	37	16'-1"	E	30	31	34	36
Double 16 G Steel C	L18, L8	20'-1"	F1	31	33	36	38	19'-5"	F1	31	32	36	38
Double 14 G Steel C	L18, L8	22'-6"	F1	32	34	37	39	22'-1"	F1	33	33	37	39
Double 12 G Steel C	L18, L8	25'-8"	F2	34	35	38	41	25'-1"	F2	34	35	38	40

Header	Detail	trib 9'	Min Post Type	Uplift Footing (in)	8'	12'	15'	trib 9.5'	Min Post Type	Uplift Footing (in)	8'	12'	15'	trib 10'	Min Post Type	Uplift Footing (in)	8'	12'	15'	trib 11'	Min Post Type	Uplift Footing (in)	8'	12'	15'	trib 12'	Min Post Type	Uplift Footing (in)	8'	12'	15'
On Slab	On Slab	3'-11"	A1					3'-9"	A1					3'-6"	A1					3'-2"	A1					2'-11"	A1				
0.042"x3"x8"	L1	5'-1"	A2	20	25	28	30	4'-10"	A2	21	26	28	30	4'-8"	A2	21	26	29	30	4'-4"	A2	21	27	29	31	4'-0"	A2	21	27	30	32
Double 3"x8"	L1, L12	8'-2"	C	24	26	29	30	7'-11"	C	24	26	29	30	7'-7"	C	24	26	29	30	7'-2"	C	25	27	29	31	6'-9"	D	25	27	30	32
Double 2"x6.625"	L2, L12	7'-5"	C	23	25	28	30	7'-3"	C	23	26	28	30	7'-0"	C	24	26	29	30	6'-7"	C	24	27	29	31	6'-3"	C	24	27	30	32
16 G Steel C	L18	7'-6"	C	23	25	28	30	7'-2"	C	23	26	28	30	6'-9"	C	23	26	29	30	6'-2"	C	23	27	29	31	5'-7"	C	23	27	30	32
14 G Steel C	L18	10'-2"	D	26	27	30	32	9'-8"	D	26	27	30	32	9'-1"	D	26	27	30	31	8'-4"	D	26	27	29	31	7'-7"	D	26	27	30	32
12 G Steel C	L18	15'-7"	E	30	31	34	36	15'-0"	E	30	30	34	36	14'-5"	E	30	30	33	35	13'-7"	F1	30	30	33	35	12'-9"	F1	31	29	32	34
Double 16 G Steel C	L18, L8	18'-10"	F1	32	32	36	38	18'-4"	F1	32	32	35	37	17'-9"	F1	32	32	35	37	16'-10"	F1	33	31	35	37	16'-0"	F1	33	31	34	36
Double 14 G Steel C	L18, L8	21'-6"	F1	33	33	37	39	20'-11"	F1	33	33	37	39	20'-4"	F1	34	33	36	38	19'-4"	F2	34	32	36	38	18'-5"	F2	35	32	35	37
Double 12 G Steel C	L18, L8	24'-8"	F2	35	34	38	40	24'-3"	F2	35	34	38	40	23'-10"	F2	35	34	38	40	23'-1"	F3	36	34	37	40	22'-5"	F3	37	34	37	39

Header	Detail	trib 13'	Min Post Type	Uplift Footing (in)	8'	12'	15'	trib 14'	Min Post Type	Uplift Footing (in)	8'	12'	15'	trib 15'	Min Post Type	Uplift Footing (in)	8'	12'	15'	trib 16'	Min Post Type	Uplift Footing (in)	8'	12'	15'	trib 17'	Min Post Type	Uplift Footing (in)	8'	12'	15'
On Slab	On Slab	2'-8"	A1					2'-6"	A1					2'-4"	A1					2'-2"	A1					2'-1"	A1				
0.042"x3"x8"	L1	3'-9"	A2	21	28	31	32	3'-7"	A2	21	28	31	33	3'-4"	A2	21	29	32	34	3'-2"	A2	21	29	32	34	3'-0"	A2	21	30	33	35
Double 3"x8"	L1, L12	6'-5"	D	25	28	31	32	6'-1"	D	25	28	31	33	5'-9"	D	25	29	32	34	5'-6"	D	26	29	32	34	5'-3"	D	26	30	33	35
Double 2"x6.625"	L2, L12	5'-11"	C	24	28	31	32	5'-8"	D	25	28	31	33	5'-5"	D	25	29	32	34	5'-2"	D	25	29	32	34	5'-0"	D	25	30	33	35
16 G Steel C	L18	5'-2"	C	23	28	31	32	4'-10"	C	23	28	31	33	4'-6"	C	23	29	32	34	4'-3"	C	23	29	32	34	4'-0"	C	23	30	33	35
14 G Steel C	L18	7'-1"	D	26	28	31	32	6'-6"	D	26	28	31	33	6'-1"	D	26	29	32	34	5'-8"	D	26	29	32	34	5'-5"	D	26	30	33	35
12 G Steel C	L18	12'-2"	F1	31	29	32	34	11'-6"	F1	31	28	31	33	11'-0"	F1	31	29	32	34	10'-6"	F1	32	29	32	34	10'-1"	F1	32	30	33	35
Double 16 G Steel C	L18, L8	15'-3"	F1	33	30	34	36	14'-7"	F2	34	30	33	35	14'-0"	F2	34	30	33	35	13'-6"	F2	34	29	33	35	13'-0"	F2	35	30	33	35
Double 14 G Steel C	L18, L8	17'-8"	F2	35	32	35	37	17'-0"	F2	35	31	35	37	16'-5"	F2	36	31	34	36	15'-10"	F3	36	31	34	36	15'-4"	F3	37	30	34	36
Double 12 G Steel C	L18, L8	21'-10"	F3	38	33	37	39	21'-4"	F4	38	33	37	39	20'-7"	F4	39	33	36	38	19'-11"	F4	39	33	36	38	19'-4"	F4	40	32	36	38

Header	Detail	trib 18'	Min Post Type	Uplift Footing (in)	8'	12'	15'	trib 19'	Min Post Type	Uplift Footing (in)	8'	12'	15'
On Slab	On Slab	1'-11"	A1					1'-10"	A1				
0.042"x3"x8"	L1	2'-10"	A2	21	30	33	35	2'-9"	A2	21	30	34	36
Double 3"x8"	L1, L12	5'-1"	D	26	30	33	35	4'-10"	D	26	30	34	36
Double 2"x6.625"	L2, L12	4'-9"	D	25	30	33	35	4'-7"	D	26	30	34	36
16 G Steel C	L18	3'-9"	C	23	30	33	35	3'-7"	C	23	30	34	36
14 G Steel C	L18	5'-1"	D	26	30	33	35	4'-10"	D	26	30	34	36
12 G Steel C	L18	9'-8"	F1	32	30	33	35	9'-4"	F1	32	30	34	36
Double 16 G Steel C	L18, L8	12'-6"	F2	35	30	33	35	12'-2"	F2	35	30	34	36
Double 14 G Steel C	L18, L8	14'-10"	F3	37	30	33	35	14'-5"	F3	37	30	34	36
Double 12 G Steel C	L18, L8	18'-9"	F4	40	32	36	38	18'-3"	F5	40	32	35	37

Ground Snow Load: 0 psf Live Load: 20 psf Roof Design Load 20 psf Wind Speed: 115 MPH EXPOSURE C or 130 MPH EXPOSURE B Seismic Ss= 150% Seismic Design Category D Structures are Attached to Existing Building

Table 2.6c (cubic footing "d"; Constrained Footing (in) Max Post Length 8', 12', 15')

Header	Detail	trib 3'	Min Post Type	Uplift Footing (in)	8'	12'	15'	trib 3.5'	Min Post Type	Uplift Footing (in)	8'	12'	15'	trib 4'	Min Post Type	Uplift Footing (in)	8'	12'	15'	trib 4.5'	Min Post Type	Uplift Footing (in)	8'	12'	15'	trib 5'	Min Post Type	Uplift Footing (in)	8'	12'	15'
On Slab	On Slab	11'-10"	A1					10'-2"	A1					8'-11"	A1					7'-11"	A1					7'-1"	A1				
0.042"x3"x8"	L1	10'-5"	A1	18	19	21	22	9'-6"	A1	18	20	22	23	8'-8"	A1	19	20	23	24	8'-1"	A1	19	21	23	25	7'-7"	A1	19	22	24	25
Double 3"x8"	L1, L12	15'-5"	A2	21	19	21	22	14'-3"	A2	21	20	22	23	13'-1"	A2	21	20	23	24	12'-4"	A2	22	21	23	25	11'-7"	B	22	22	24	25
Double 2"x6.625"	L2, L12	13'-9"	A2	20	19	21	22	12'-8"	A2	20	20	22	23	11'-9"	A2	21	20	23	24	11'-0"	A2	21	21	23	25	10'-5"	A2	21	22	24	25
16 G Steel C	L18	18'-9"	A2	22	19	21	22	16'-11"	B	22	20	22	23	15'-3"	C	23	20	23	24	14'-1"	C	23	21	23	25	13'-1"	C	23	22	24	25
14 G Steel C	L18	22'-2"	C	23	19	21	22	20'-2"	C	24	20	22	23	18'-2"	C	24	20	23	24	16'-11"	C	24	21	23	25	15'-9"	C	25	22	24	25
12 G Steel C	L18	28'-0"	D	25	20	22	23	26'-8"	D	26	20	22	24	25'-6"	D	27	21	23	24	24'-0"	E	27	21	23	25	22'-7"	E	28	22	24	25
Double 16 G Steel C	L18, L8	29'-2"	D	25	20	22	23	27'-9"	D	26	20	23	24	26'-6"	E	27	21	23	25	25'-6"	E	28	21	24	25	24'-8"	E	28	22	24	26
Double 14 G Steel C	L18, L8	31'-1"	D	26	20	22	24	29'-7"	D	27	21	23	24	28'-4"	E	28	21	24	25	27'-3"	E	28	22	24	26	26'-4"	E	29	22	25	26
Double 12 G Steel C	L18, L8	35'-4"	E	27	21	23	25	33'-7"	E	28	22	24	25	32'-2"	E	29	22	24	26	30'-11"	E	30	22	25	26	29'-11"	F1	30	23	25	27

Header	Detail	trib 5.5'	Min Post Type	Uplift Footing (in)	8'	12'	15'	trib 6'	Min Post Type	Uplift Footing (in)	8'	12'	15'	trib 6.5'	Min Post Type	Uplift Footing (in)	8'	12'	15'	trib 7'	Min Post Type	Uplift Footing (in)	8'	12'	15'	trib 7.5'	Min Post Type	Uplift Footing (in)	8'	12'	15'
On Slab	On Slab	6'-5"	A1					5'-11"	A1					5'-5"	A1					5'-1"	A1					4'-9"	A1				
0.042"x3"x8"	L1	7'-2"	A2	20	22	25	26	6'-8"	A2	20	23	25	27	6'-4"	A2	20	23	26	27	6'-1"	A2	20	24	26	28	5'-9"	A2	20	24	27	28
Double 3"x8"	L1, L12	11'-0"	C	23	22	25	26	10'-5"	C	23	23	25	27	9'-11"	C	23	23	26	27	9'-6"	C	23	24	26	28	9'-2"	C	23	24	27	28
Double 2"x6.625"	L2, L12	9'-11"	A2	22	22	25	26	9'-5"	A2	22	23	25	27	9'-0"	B	22	23	26	27	8'-8"	C	22	24	26	28	8'-4"	C	23	24	27	28
16 G Steel C	L18	12'-3"	C	23	22	25	26	11'-2"	C	23	23	25	27	10'-5"	C	23	23	26	27	9'-8"	C	23	24	26	28	9'-1"	C	23	24	27	28
14 G Steel C	L18	14'-10"	D	25	22	25	26	13'-10"	D	25	23	25	27	13'-1"	D	25	23	26	27	12'-5"	D	25	24	26	28	11'-10"	D	26	24	27	28
12 G Steel C	L18	21'-4"	E	28	22	25	26	20'-1"	E	28	23	25	27	19'-2"	E	29	23	26	27	18'-4"	E	29	24	26	28	17'-6"	E	29	24	27	28
Double 16 G Steel C	L18, L8	23'-11"	E	29	22	25	26	23'-3"	E	30	23	25	27	22'-6"	F1	30	23	26	27	21'-8"	F1	31	24	26	28	20'-11"	F1	31	24	27	28
Double 14 G Steel C	L18, L8	25'-6"	E	30	23	25	26	24'-9"	F1	30	23	25	27	24'-2"	F1	31	23	26	27	23'-7"	F1	31	24	26	28	23'-0"	F1	32	24	27	28
Double 12 G Steel C	L18, L8	29'-0"	F1	31	23	26	27	28'-2"	F1	32	24	26	28	27'-5"	F1	32	24	27	28	26'-9"	F1	33	24	27	28	26'-2"	F1	33	25	27	29

Header	Detail	trib 8'	Min Post Type	Uplift Footing (in)	8'	12'	15'	trib 8.5'	Min Post Type	Uplift Footing (in)	8'	12'	15'
On Slab	On Slab	4'-5"	A1					4'-2"	A1				
0.042"x3"x8"	L1	5'-6"	A2	20	24	27	29	5'-3"	A2	20	25	28	29
Double 3"x8"	L1, L12	8'-9"	C	24	24	27	29	8'-5"	C	24	25	28	29
Double 2"x6.625"	L2, L12	8'-0"	C	23	24	27	29	7'-8"	C	23	25	28	29
16 G Steel C	L18	8'-5"	C	23	24	27	29	7'-11"	C	23	25	28	29
14 G Steel C	L18	11'-3"	D	26	24	27	29	10'-9"	D	26	25	28	29
12 G Steel C	L18	16'-9"	E	29	24	27	29	16'-1"	E	30	25	28	29
Double 16 G Steel C	L18, L8	20'-1"	F1	31	24	27	29	19'-5"	F1	31	25	28	29
Double 14 G Steel C	L18, L8	22'-6"	F1	32	24	27	29	22'-1"	F1	33	25	28	29
Double 12 G Steel C	L18, L8	25'-8"	F2	34	25	27	29	25'-1"	F2	34	25	28	29

Header	Detail	trib 9'	Min Post Type	Uplift Footing (in)	8'	12'	15'	trib 9.5'	Min Post Type	Uplift Footing (in)	8'	12'	15'	trib 10'	Min Post Type	Uplift Footing (in)	8'	12'	15'	trib 11'	Min Post Type	Uplift Footing (in)	8'	12'	15'	trib 12'	Min Post Type	Uplift Footing (in)	8'	12'	15'
On Slab	On Slab	3'-11"	A1					3'-9"	A1					3'-6"	A1					3'-2"	A1					2'-11"	A1				
0.042"x3"x8"	L1	5'-1"	A2	20	25	28	30	4'-10"	A2	21	26	28	30	4'-8"	A2	21	26	29	30	4'-4"	A2	21	27	29	31	4'-0"	A2	21	27	30	32
Double 3"x8"	L1, L12	8'-2"	C	24	26	29	30	7'-11"	C	24	26	29	30	7'-7"	C	24	26	29	30	7'-2"	C	25	27	29	31	6'-9"	D	25	27	30	32
Double 2"x6.625"	L2, L12	7'-5"	C	23	25	28	30	7'-3"	C	23	26	28	30	7'-0"	C	24	26	29	30	6'-7"	C	24	27	29	31	6'-3"	C	24	27	30	32
16 G Steel C	L18	7'-6"	C	23	25	28	30	7'-2"	C	23	26	28	30	6'-9"	C	23	26	29	30	6'-2"	C	23	27	29	31	5'-7"	C	23	27	30	32
14 G Steel C	L18	10'-2"	D	26	27	30	32	9'-8"	D	26	27	30	32	9'-1"	D	26	27	30	31	8'-4"	D	26	27	29	31	7'-7"	D	26	27	30	32
12 G Steel C	L18	15'-7"	E	30	31	34	36	15'-0"	E	30	30	34	36	14'-5"	E	30	30	33	35	13'-7"	F1	30	30	33	35	12'-9"	F1	31	29	32	34
Double 16 G Steel C	L18, L8	18'-10"	F1	32	32	36	38	18'-4"	F1	32	32	35	37	17'-9"	F1	32	32	35	37	16'-10"	F1	33	31	35	37	16'-0"	F1	33	31	34	36
Double 14 G Steel C	L18, L8	21'-6"	F1	33	33	37	39	20'-11"	F1	33	33	37	39	20'-4"	F1	34	33	36	38	19'-4"	F2	34	32	36	38	18'-5"	F2	35	32	35	37
Double 12 G Steel C	L18, L8	24'-8"	F2	35	34	38	40	24'-3"	F2	35	34	38	40	23'-10"	F2	35	34	38	40	23'-1"	F3	36	34	37	40	22'-5"	F3	37	34	37	39

Header	Detail	trib 13'	Min Post Type	Uplift Footing (in)	8'	12'	15'	trib 14'	Min Post Type	Uplift Footing (in)	8'	12'	15'	trib 15'	Min Post Type	Uplift Footing (in)	8'	12'	15'	trib 16'	Min Post Type	Uplift Footing (in)	8'	12'	15'	trib 17'	Min Post Type	Uplift Footing (in)	8'	12'	15'
On Slab	On Slab	2'-8"	A1					2'-6"	A1					2'-4"	A1					2'-2"	A1					2'-1"	A1				
0.042"x3"x8"	L1	3'-9"	A2	21	28	31	32	3'-7"	A2	21	28	31	33	3'-4"	A2	21	29	32	34	3'-2"	A2	21	29	32	34	3'-0"	A2	21	30	33	35
Double 3"x8"	L1, L12	6'-5"	D	25	28	31	32	6'-1"	D	25	28	31	33	5'-9"	D	25	29	32	34	5'-6"	D	26	29	32	34	5'-3"	D	26	30	33	35
Double 2"x6.625"	L2, L12	5'-11"	C	24	28	31	32	5'-8"	D	25	28	31	33	5'-5"	D	25	29	32	34	5'-2"	D	25	29	32	34	5'-0"	D	25	30	33	35
16 G Steel C	L18	5'-2"	C	23	28	31	32	4'-10"	C	23	28	31	33	4'-6"	C	23	29	32	34	4'-3"	C	23	29	32	34	4'-0"	C	23	30	33	35
14 G Steel C	L18	7'-1"	D	26	28	31	32	6'-6"	D	26	28	31	33	6'-1"	D	26	29	32	34	5'-8"	D	26	29	32	34	5'-5"	D	26	30	33	35
12 G Steel C	L18	12'-2"	F1	31	29	32	34	11'-6"	F1	31	28	31	33	11'-0"	F1	31	29	32	34	10'-6"	F1	32	29	32	34	10'-1"	F1	32	30	33	35
Double 16 G Steel C	L18, L8	15'-3"	F1	33	30	34	36	14'-7"	F2	34	30	33	35	14'-0"	F2	34	30	33	35	13'-6"	F2	34	29	33	35	13'-0"	F2	35	30	33	35
Double 14 G Steel C	L18, L8	17'-8"	F2	35	32	35	37	17'-0"	F2	35	31	35	37	16'-5"	F2	36	31	34	36	15'-10"	F3	36	31	34	36	15'-4"	F3	37	30	34	36
Double 12 G Steel C	L18, L8	21'-10"	F3	38	33	37	39	21'-4"	F4	38	33	37	39	20'-7"	F4	39	33	36	38	19'-11"	F4	39	33	36	38	19'-4"	F4	40	32	36	38

Header	Detail	trib 18'	Min Post Type	Uplift Footing (in)	8'	12'	15'	trib 19'	Min Post Type	Uplift Footing (in)	8'	12'	15'
On Slab	On Slab	1'-11"	A1					1'-10"	A1				
0.042"x3"x8"	L1	2'-10"	A2	21	30	33	35	2'-9"	A2	21	30	34	36
Double 3"x8"	L1, L12	5'-1"	D	26	30	33	35	4'-10"	D	26	30	34	36
Double 2"x6.625"	L2, L12	4'-9"	D	25	30	33	35	4'-7"	D	26	30	34	36
16 G Steel C	L18	3'-9"	C	23	30	33	35	3'-7"	C	23	30	34	36
14 G Steel C	L18	5'-1"	D	26	30	33	35	4'-10"	D	26	30	34	36
12 G Steel C	L18	9'-8"	F1	32	30	33	35	9'-4"	F1	32	30	34	36
Double 16 G Steel C	L18, L8	12'-6"	F2	35	30	33	35	12'-2"	F2	35	30	34	36
Double 14 G Steel C	L18, L8	14'-10"	F3	37	30	33	35	14'-5"	F3	37	30	34	36
Double 12 G Steel C	L18, L8	18'-9"	F4	40	32	36	38	18'-3"	F5	40	32	35	37

Amerimax Exterior Home Products
28921 US Hwy 74
Romoland, CA 92585

Carl Putnam, P. E.
3441 Ivylink Place
Lynchburg, VA 24503
(434) 384-2514
carlputnam@comcast.net

PROFESSIONAL ENGINEER CARL PUTNAM C 68139 EXP. 6/30/2019 CIVIL STATE OF CALIFORNIA

May 27 2017

SECTION 2.0 POST SPACING, POST TYPE AND FOOTING SIZE FOR LATTICE COVER

Ground Snow Load: 0 psf Live Load: 20 psf Roof Design Load 20 psf Wind Speed: 130 MPH EXPOSURE C or 150 MPH EXPOSURE B Seismic Ss= 150% Seismic Design Category D Freestanding or Attached

Table 2.7a — cubic footing "d"; Constrained Footing (in) Max Post Length 8' / 12' / 15'

Header	Detail	trib 3'	Min Post Type	Uplift Footing (in)	8'	12'	15'	trib 3.5'	Min Post Type	Uplift Footing (in)	8'	12'	15'	trib 4'	Min Post Type	Uplift Footing (in)	8'	12'	15'	trib 4.5'	Min Post Type	Uplift Footing (in)	8'	12'	15'	trib 5'	Min Post Type	Uplift Footing (in)	8'	12'	15'	trib 5.5'	Min Post Type	Uplift Footing (in)	8'	12'	15'
On Slab	On Slab	11'-10"	A1					10'-2"	A1					8'-11"	A1					7'-11"	A1					7'-1"	A1					6'-5"	A1				
0.042"x3"x8"	L1	10'-5"	A1	20	29	33	34	9'-6"	A1	20	29	32	34	8'-8"	A1	20	28	31	33	8'-1"	A1	21	28	31	32	7'-7"	A1	21	27	30	32	7'-2"	A2	21	27	30	31
Double 3"x8"	L1, L12	15'-5"	A2	22	32	36	38	14'-3"	A2	23	32	35	37	13'-1"	A2	23	31	35	37	12'-4"	A2	24	31	34	36	11'-7"	B	24	30	33	35	11'-0"	C	25	30	33	35
Double 2"x6.625"	L2, L12	13'-9"	A2	22	30	33	35	12'-8"	A2	22	29	33	35	11'-9"	A2	23	29	32	34	11'-0"	A2	23	28	32	33	10'-5"	A2	23	28	31	33	9'-11"	A2	24	28	31	32
16 G Steel C	L18	18'-9"	A2	24	34	38	40	16'-11"	B	24	33	37	39	15'-3"	C	25	32	36	38	14'-1"	C	25	32	35	37	13'-1"	C	25	31	35	37	12'-3"	C	25	31	34	36
14 G Steel C	L18	22'-2"	C	25	36	39	42	20'-2"	C	26	35	38	41	18'-2"	C	26	34	38	40	16'-11"	C	26	33	37	39	15'-9"	C	27	33	36	38	14'-10"	D	27	32	36	38
12 G Steel C	L18	28'-0"	D	27	38	42	44	26'-8"	D	28	37	41	44	25'-6"	D	29	37	41	43	24'-0"	E	30	36	40	43	22'-7"	E	30	36	40	42	21'-4"	E	31	35	39	41
Double 16 G Steel C	L18, L8	29'-2"	D	28	38	42	45	27'-9"	D	29	38	42	44	26'-6"	E	30	37	41	44	25'-6"	E	30	37	41	43	24'-8"	E	31	37	41	43	23'-11"	E	32	36	40	43
Double 14 G Steel C	L18, L8	31'-1"	D	28	39	43	45	29'-7"	D	29	38	42	45	28'-4"	E	30	38	42	44	27'-3"	E	31	37	42	44	26'-4"	E	32	37	41	44	25'-6"	E	32	37	41	43
Double 12 G Steel C	L18, L8	35'-4"	E	30	40	44	47	33'-7"	E	31	40	44	46	32'-2"	E	31	39	43	46	30'-11"	E	32	39	43	45	29'-11"	F1	33	38	43	45	29'-0"	F1	34	38	42	45

Header	Detail	trib 6'	Min Post Type	Uplift Footing (in)	8'	12'	15'	trib 6.5'	Min Post Type	Uplift Footing (in)	8'	12'	15'	trib 7'	Min Post Type	Uplift Footing (in)	8'	12'	15'	trib 7.5'	Min Post Type	Uplift Footing (in)	8'	12'	15'	trib 8'	Min Post Type	Uplift Footing (in)	8'	12'	15'	trib 8.5'	Min Post Type	Uplift Footing (in)	8'	12'	15'
On Slab	On Slab	5'-11"	A1					5'-5"	A1					5'-1"	A1					4'-9"	A1					4'-5"	A1					4'-2"	A1				
0.042"x3"x8"	L1	6'-8"	A2	21	26	29	31	6'-4"	A2	22	26	29	30	6'-1"	A2	22	26	28	30	5'-9"	A2	22	26	28	30	5'-6"	A2	22	26	29	31	5'-3"	A2	22	26	29	31
Double 3"x8"	L1, L12	10'-5"	C	25	29	33	34	9'-11"	C	25	29	32	34	9'-6"	C	25	29	32	34	9'-2"	C	26	28	32	33	8'-9"	C	26	28	31	33	8'-5"	C	26	28	31	33
Double 2"x6.625"	L2, L12	9'-5"	A2	24	27	30	32	9'-0"	B	24	27	30	32	8'-8"	C	25	27	30	31	8'-4"	C	25	26	29	31	8'-0"	C	25	26	29	31	7'-8"	C	25	26	29	31
16 G Steel C	L18	11'-2"	C	25	30	33	35	10'-5"	C	25	29	33	34	9'-8"	C	25	29	32	34	9'-1"	C	25	28	31	33	8'-5"	C	25	28	31	33	7'-11"	C	25	27	30	32
14 G Steel C	L18	13'-10"	D	27	32	35	37	13'-1"	D	27	31	35	37	12'-5"	D	28	31	34	36	11'-10"	D	28	30	34	36	11'-3"	D	28	30	33	35	10'-9"	D	28	30	33	35
12 G Steel C	L18	20'-1"	E	31	35	38	41	19'-2"	E	31	34	38	40	18'-4"	E	31	34	38	40	17'-6"	E	32	34	37	39	16'-9"	E	32	33	37	39	16'-1"	E	32	33	36	38
Double 16 G Steel C	L18, L8	23'-3"	E	32	36	40	42	22'-6"	F1	33	36	40	42	21'-8"	F1	33	35	39	41	20'-11"	F1	34	35	39	41	20'-1"	F1	34	35	38	41	19'-5"	F1	34	34	38	40
Double 14 G Steel C	L18, L8	24'-9"	F1	33	37	41	43	24'-2"	F1	34	36	40	43	23'-7"	F1	34	36	40	42	23'-0"	F1	35	36	40	42	22'-6"	F1	35	36	40	42	22'-1"	F1	36	36	39	42
Double 12 G Steel C	L18, L8	28'-2"	F1	34	38	42	44	27'-5"	F1	35	38	42	44	26'-9"	F1	36	37	41	44	26'-2"	F1	36	37	41	44	25'-8"	F2	37	37	41	43	25'-1"	F2	37	37	41	43

Header	Detail	trib 9'	Min Post Type	Uplift Footing (in)	8'	12'	15'	trib 9.5'	Min Post Type	Uplift Footing (in)	8'	12'	15'	trib 10'	Min Post Type	Uplift Footing (in)	8'	12'	15'	trib 11'	Min Post Type	Uplift Footing (in)	8'	12'	15'	trib 12'	Min Post Type	Uplift Footing (in)	8'	12'	15'	trib 13'	Min Post Type	Uplift Footing (in)	8'	12'	15'
On Slab	On Slab	3'-11"	A1					3'-9"	A1					3'-6"	A1					3'-2"	A1					2'-11"	A1					2'-8"	A1				
0.042"x3"x8"	L1	5'-1"	A2	22	27	30	31	4'-10"	A2	22	27	30	32	4'-8"	A2	27	28	31	32	4'-4"	A2	23	28	31	33	4'-0"	A2	27	29	32	34	3'-9"	A2	23	29	33	35
Double 3"x8"	L1, L12	8'-2"	C	26	28	31	32	7'-11"	C	26	27	30	32	7'-7"	C	31	28	31	32	7'-2"	C	27	28	31	33	6'-9"	D	32	29	32	34	6'-5"	D	27	29	33	35
Double 2"x6.625"	L2, L12	7'-5"	C	25	27	30	31	7'-3"	C	26	27	30	32	7'-0"	C	30	28	31	32	6'-7"	C	26	28	31	33	6'-3"	C	31	29	32	34	5'-11"	C	27	29	33	35
16 G Steel C	L18	7'-6"	C	25	27	30	32	7'-2"	C	25	27	30	32	6'-9"	C	30	28	31	32	6'-2"	C	25	28	31	33	5'-7"	C	30	29	32	34	5'-2"	C	25	29	33	35
14 G Steel C	L18	10'-2"	D	28	29	32	34	9'-8"	D	28	29	32	34	9'-1"	D	33	28	32	33	8'-4"	D	28	28	31	33	7'-7"	D	33	29	32	34	7'-1"	D	28	29	33	35
12 G Steel C	L18	15'-7"	E	32	33	36	38	15'-0"	E	33	32	36	38	14'-5"	E	39	32	35	37	13'-7"	F1	33	31	35	37	12'-9"	F1	40	31	34	36	12'-2"	F1	34	31	34	36
Double 16 G Steel C	L18, L8	18'-10"	F1	35	34	38	40	18'-4"	F1	35	34	38	40	17'-9"	F1	42	34	37	39	16'-10"	F1	36	33	37	39	16'-0"	F1	43	33	36	38	15'-3"	F1	36	32	36	38
Double 14 G Steel C	L18, L8	21'-6"	F1	36	35	39	41	20'-11"	F1	36	35	39	41	20'-4"	F1	43	35	39	41	19'-4"	F2	37	34	38	40	18'-5"	F2	45	34	38	40	17'-8"	F2	38	34	37	39
Double 12 G Steel C	L18, L8	24'-8"	F2	38	37	41	43	24'-3"	F2	38	36	40	43	23'-10"	F2	46	36	40	42	23'-1"	F3	40	36	40	42	22'-5"	F3	48	36	40	42	21'-10"	F3	41	35	39	42

Header	Detail	trib 14'	Min Post Type	Uplift Footing (in)	8'	12'	15'	trib 15'	Min Post Type	Uplift Footing (in)	8'	12'	15'	trib 16'	Min Post Type	Uplift Footing (in)	8'	12'	15'	trib 17'	Min Post Type	Uplift Footing (in)	8'	12'	15'	trib 18'	Min Post Type	Uplift Footing (in)	8'	12'	15'	trib 19'	Min Post Type	Uplift Footing (in)	8'	12'	15'
On Slab	On Slab	2'-6"	A1					2'-4"	A1					2'-2"	A1					2'-1"	A1					1'-11"	A1					1'-10"	A1				
0.042"x3"x8"	L1	3'-7"	A2	23	30	33	35	3'-4"	A2	23	31	34	36	3'-2"	A2	23	31	34	36	3'-0"	A2	23	32	35	37	2'-10"	A2	23	32	35	38	2'-9"	A2	23	32	36	38
Double 3"x8"	L1, L12	6'-1"	D	27	30	33	35	5'-9"	D	28	31	34	36	5'-6"	D	28	31	34	36	5'-3"	D	28	32	35	37	5'-1"	D	28	32	35	38	4'-10"	D	28	32	36	38
Double 2"x6.625"	L2, L12	5'-8"	D	27	30	33	35	5'-5"	D	27	31	34	36	5'-2"	D	27	31	34	36	5'-0"	D	27	32	35	37	4'-9"	D	28	32	35	38	4'-7"	D	28	32	36	38
16 G Steel C	L18	4'-10"	C	25	30	33	35	4'-6"	C	25	31	34	36	4'-3"	C	25	31	34	36	4'-0"	C	25	32	35	37	3'-9"	C	25	32	35	38	3'-7"	C	25	32	36	38
14 G Steel C	L18	6'-6"	D	28	30	33	35	6'-1"	D	28	31	34	36	5'-8"	D	28	31	34	36	5'-5"	D	28	32	35	37	5'-1"	D	28	32	35	38	4'-10"	D	28	32	36	38
12 G Steel C	L18	11'-6"	F1	34	30	33	35	11'-0"	F1	34	31	34	36	10'-6"	F1	34	31	34	36	10'-1"	F1	35	32	35	37	9'-8"	F1	35	32	35	38	9'-4"	F1	35	32	36	38
Double 16 G Steel C	L18, L8	14'-7"	F2	37	32	35	38	14'-0"	F2	37	32	35	37	13'-6"	F2	37	31	35	37	13'-0"	F2	38	32	35	37	12'-6"	F2	38	32	35	38	12'-2"	F2	38	32	36	38
Double 14 G Steel C	L18, L8	17'-0"	F2	39	33	37	39	16'-5"	F2	39	33	37	39	15'-10"	F3	39	33	36	38	15'-4"	F3	40	32	36	38	14'-10"	F3	40	32	36	38	14'-5"	F3	41	32	36	38
Double 12 G Steel C	L18, L8	21'-4"	F4	42	35	39	41	20'-7"	F4	42	35	39	41	19'-11"	F4	43	35	38	41	19'-4"	F4	43	34	38	40	18'-9"	F4	43	34	38	40	18'-3"	F5	44	34	38	40

Ground Snow Load: 0 psf Live Load: 20 psf Roof Design Load 20 psf Wind Speed: 140 MPH EXPOSURE C or 160 MPH EXPOSURE B Seismic Ss= 150% Seismic Design Category D Freestanding or Attached

Table 2.7b — cubic footing "d"; Constrained Footing (in) Max Post Length 8' / 12' / 15'

Header	Detail	trib 3'	Min Post Type	Uplift Footing (in)	8'	12'	15'	trib 3.5'	Min Post Type	Uplift Footing (in)	8'	12'	15'	trib 4'	Min Post Type	Uplift Footing (in)	8'	12'	15'	trib 4.5'	Min Post Type	Uplift Footing (in)	8'	12'	15'	trib 5'	Min Post Type	Uplift Footing (in)	8'	12'	15'	trib 5.5'	Min Post Type	Uplift Footing (in)	8'	12'	15'
On Slab	On Slab	11'-10"	A1					10'-2"	A1					8'-11"	A1					7'-11"	A1					7'-1"	A1					6'-5"	A1				
0.042"x3"x8"	L1	10'-5"	A1	21	31	34	36	9'-6"	A1	21	30	33	35	8'-8"	A1	21	29	32	34	8'-1"	A1	22	29	32	34	7'-7"	A1	22	28	31	33	7'-2"	A2	22	28	31	33
Double 3"x8"	L1, L12	15'-5"	A2	24	34	37	40	14'-3"	A2	24	33	37	39	13'-1"	A2	25	32	36	38	12'-4"	A2	25	32	35	37	11'-7"	B	25	31	35	37	11'-0"	C	26	31	34	36
Double 2"x6.625"	L2, L12	13'-9"	A2	23	31	35	37	12'-8"	A2	23	31	34	36	11'-9"	A2	24	30	33	35	11'-0"	A2	24	30	33	35	10'-5"	A2	25	29	32	34	9'-11"	A2	25	29	32	34
16 G Steel C	L18	18'-9"	A2	25	35	39	42	16'-11"	B	26	35	38	40	15'-3"	C	26	34	37	39	14'-1"	C	26	33	37	39	13'-1"	C	26	32	36	38	12'-3"	C	27	32	35	37
14 G Steel C	L18	22'-2"	C	27	37	41	43	20'-2"	C	27	36	40	42	18'-2"	C	27	35	39	41	16'-11"	C	28	34	38	40	15'-9"	C	28	34	38	40	14'-10"	D	28	33	37	39
12 G Steel C	L18	28'-0"	D	29	39	43	46	26'-8"	D	30	39	43	45	25'-6"	D	31	38	42	45	24'-0"	E	31	38	42	44	22'-7"	E	32	37	41	44	21'-4"	E	32	37	41	43
Double 16 G Steel C	L18, L8	29'-2"	D	29	40	44	46	27'-9"	D	30	39	43	45	26'-6"	E	31	39	43	45	25'-6"	E	32	38	42	45	24'-8"	E	33	38	42	45	23'-11"	E	33	38	42	44
Double 14 G Steel C	L18, L8	31'-1"	D	30	40	45	47	29'-7"	D	31	40	44	47	28'-4"	E	32	39	44	46	27'-3"	E	33	39	43	46	26'-4"	E	33	39	43	45	25'-6"	E	34	38	42	45
Double 12 G Steel C	L18, L8	35'-4"	E	31	42	46	49	33'-7"	E	32	41	45	48	32'-2"	E	33	41	45	48	30'-11"	E	34	40	45	47	29'-11"	F1	35	40	44	47	29'-0"	F1	36	40	44	46

Header	Detail	trib 6'	Min Post Type	Uplift Footing (in)	8'	12'	15'	trib 6.5'	Min Post Type	Uplift Footing (in)	8'	12'	15'	trib 7'	Min Post Type	Uplift Footing (in)	8'	12'	15'	trib 7.5'	Min Post Type	Uplift Footing (in)	8'	12'	15'	trib 8'	Min Post Type	Uplift Footing (in)	8'	12'	15'	trib 8.5'	Min Post Type	Uplift Footing (in)	8'	12'	15'
On Slab	On Slab	5'-11"	A1					5'-5"	A1					5'-1"	A1					4'-9"	A1					4'-5"	A1					4'-2"	A1				
0.042"x3"x8"	L1	6'-8"	A2	23	27	30	32	6'-4"	A2	23	27	30	32	6'-1"	A2	23	27	30	31	5'-9"	A2	23	27	29	31	5'-6"	A2	23	27	30	32	5'-3"	A2	23	27	30	32
Double 3"x8"	L1, L12	10'-5"	C	26	31	34	36	9'-11"	C	26	30	33	35	9'-6"	C	27	30	33	35	9'-2"	C	27	30	33	35	8'-9"	C	27	29	32	34	8'-5"	C	27	29	32	34
Double 2"x6.625"	L2, L12	9'-5"	A2	25	28	31	33	9'-0"	B	26	28	31	33	8'-8"	C	26	28	31	33	8'-4"	C	26	27	30	32	8'-0"	C	26	27	30	32	7'-8"	C	27	27	30	32
16 G Steel C	L18	11'-2"	C	27	31	34	36	10'-5"	C	27	30	34	36	9'-8"	C	27	30	33	35	9'-1"	C	27	29	33	35	8'-5"	C	27	29	32	34	7'-11"	C	27	28	32	33
14 G Steel C	L18	13'-10"	D	29	33	36	38	13'-1"	D	29	32	36	38	12'-5"	D	29	32	35	37	11'-10"	D	29	32	35	37	11'-3"	D	29	31	34	36	10'-9"	D	30	31	34	36
12 G Steel C	L18	20'-1"	E	32	36	40	42	19'-2"	E	33	36	39	42	18'-4"	E	33	35	39	41	17'-6"	E	33	35	39	41	16'-9"	E	34	34	38	40	16'-1"	E	34	34	38	40
Double 16 G Steel C	L18, L8	23'-3"	E	34	37	41	44	22'-6"	F1	35	37	41	43	21'-8"	F1	35	37	41	43	20'-11"	F1	35	36	40	43	20'-1"	F1	36	36	40	42	19'-5"	F1	36	36	40	42
Double 14 G Steel C	L18, L8	24'-9"	F1	35	38	42	45	24'-2"	F1	35	38	42	44	23'-7"	F1	36	38	42	44	23'-0"	F1	37	37	41	44	22'-6"	F1	37	37	41	44	22'-1"	F1	38	37	41	43
Double 12 G Steel C	L18, L8	28'-2"	F1	36	39	43	46	27'-5"	F1	37	39	43	46	26'-9"	F1	38	39	43	45	26'-2"	F1	38	39	43	45	25'-8"	F2	39	38	42	45	25'-1"	F2	39	38	42	45

Header	Detail	trib 9'	Min Post Type	Uplift Footing (in)	8'	12'	15'	trib 9.5'	Min Post Type	Uplift Footing (in)	8'	12'	15'	trib 10'	Min Post Type	Uplift Footing (in)	8'	12'	15'	trib 11'	Min Post Type	Uplift Footing (in)	8'	12'	15'	trib 12'	Min Post Type	Uplift Footing (in)	8'	12'	15'	trib 13'	Min Post Type	Uplift Footing (in)	8'	12'	15'
On Slab	On Slab	3'-11"	A1					3'-9"	A1					3'-6"	A1					3'-2"	A1					2'-11"	A1					2'-8"	A1				
0.042"x3"x8"	L1	5'-1"	A2	24	28	31	33	4'-10"	A2	24	28	31	33	4'-8"	A2	24	29	32	34	4'-4"	A2	24	29	33	34	4'-0"	A2	24	30	33	35	3'-9"	A2	24	31	34	36
Double 3"x8"	L1, L12	8'-2"	C	28	29	32	34	7'-11"	C	28	28	32	33	7'-7"	C	28	29	32	34	7'-2"	C	28	29	33	34	6'-9"	D	28	30	33	35	6'-5"	D	29	31	34	36
Double 2"x6.625"	L2, L12	7'-5"	C	27	28	31	33	7'-3"	C	27	28	31	33	7'-0"	C	27	29	32	34	6'-7"	C	27	29	33	34	6'-3"	C	28	30	33	35	5'-11"	C	28	31	34	36
16 G Steel C	L18	7'-6"	C	27	28	31	33	7'-2"	C	27	28	31	33	6'-9"	C	27	29	32	34	6'-2"	C	27	29	33	34	5'-7"	C	27	30	33	35	5'-2"	C	27	31	34	36
14 G Steel C	L18	10'-2"	D	30	30	34	36	9'-8"	D	30	30	33	35	9'-1"	D	30	30	33	35	8'-4"	D	30	29	33	34	7'-7"	D	30	30	33	35	7'-1"	D	30	31	34	36
12 G Steel C	L18	15'-7"	E	34	34	37	40	15'-0"	E	34	33	37	39	14'-5"	E	34	33	37	39	13'-7"	F1	35	33	36	38	12'-9"	F1	35	32	36	38	12'-2"	F1	36	32	35	37
Double 16 G Steel C	L18, L8	18'-10"	F1	36	35	39	42	18'-4"	F1	37	35	39	41	17'-9"	F1	37	35	39	41	16'-10"	F1	37	34	38	40	16'-0"	F1	38	34	38	40	15'-3"	F1	38	34	37	39
Double 14 G Steel C	L18, L8	21'-6"	F1	38	37	41	43	20'-11"	F1	38	36	40	43	20'-4"	F1	39	36	40	42	19'-4"	F2	39	36	40	42	18'-5"	F2	40	35	39	41	17'-8"	F2	40	35	39	41
Double 12 G Steel C	L18, L8	24'-8"	F2	40	38	42	44	24'-3"	F2	40	38	42	44	23'-10"	F2	41	38	42	44	23'-1"	F3	42	37	41	44	22'-5"	F3	42	37	41	43	21'-10"	F3	43	37	41	43

Header	Detail	trib 14'	Min Post Type	Uplift Footing (in)	8'	12'	15'	trib 15'	Min Post Type	Uplift Footing (in)	8'	12'	15'	trib 16'	Min Post Type	Uplift Footing (in)	8'	12'	15'	trib 17'	Min Post Type	Uplift Footing (in)	8'	12'	15'	trib 18'	Min Post Type	Uplift Footing (in)	8'	12'	15'	trib 19'	Min Post Type	Uplift Footing (in)	8'	12'	15'
On Slab	On Slab	2'-6"	A1					2'-4"	A1					2'-2"	A1					2'-1"	A1					1'-11"	A1					1'-10"	A1				
0.042"x3"x8"	L1	3'-7"	A2	24	31	35	37	3'-4"	A2	24	32	35	37	3'-2"	A2	24	32	36	38	3'-0"	A2	25	33	36	38	2'-10"	A2	25	33	37	39	2'-9"	A2	25	34	37	40
Double 3"x8"	L1, L12	6'-1"	D	29	31	35	37	5'-9"	D	29	32	35	37	5'-6"	D	29	32	36	38	5'-3"	D	29	33	36	38	5'-1"	D	30	33	37	39	4'-10"	D	30	34	37	40
Double 2"x6.625"	L2, L12	5'-8"	D	28	31	35	37	5'-5"	D	29	32	35	37	5'-2"	D	29	32	36	38	5'-0"	D	29	33	36	38	4'-9"	D	29	33	37	39	4'-7"	D	29	34	37	40
16 G Steel C	L18	4'-10"	C	27	31	35	37	4'-6"	C	27	32	35	37	4'-3"	C	27	32	36	38	4'-0"	C	27	33	36	38	3'-9"	C	27	33	37	39	3'-7"	C	27	34	37	40
14 G Steel C	L18	6'-6"	D	30	31	35	37	6'-1"	D	30	32	35	37	5'-8"	D	30	32	36	38	5'-5"	D	30	33	36	38	5'-1"	D	30	33	37	39	4'-10"	D	30	34	37	40
12 G Steel C	L18	11'-6"	F1	36	31	35	37	11'-0"	F1	36	32	35	37	10'-6"	F1	36	32	36	38	10'-1"	F1	37	33	36	38	9'-8"	F1	37	33	37	39	9'-4"	F1	37	34	37	40
Double 16 G Steel C	L18, L8	14'-7"	F2	39	33	37	39	14'-0"	F2	39	33	36	39	13'-6"	F2	39	33	36	38	13'-0"	F2	40	33	36	38	12'-6"	F2	40	33	37	39	12'-2"	F2	40	34	37	40
Double 14 G Steel C	L18, L8	17'-0"	F2	41	35	38	41	16'-5"	F2	41	34	38	40	15'-10"	F3	42	34	38	40	15'-4"	F3	42	34	37	39	14'-10"	F3	42	33	37	39	14'-5"	F3	43	34	37	40
Double 12 G Steel C	L18, L8	21'-4"	F4	44	37	41	43	20'-7"	F4	44	36	40	43	19'-11"	F4	45	36	40	42	19'-4"	F4	45	36	40	42	18'-9"	F4	46	35	39	42	18'-3"	F5	46	35	39	41

Ground Snow Load: 0 psf Live Load: 20 psf Roof Design Load 20 psf Wind Speed: 130 MPH EXPOSURE C or 150 MPH EXPOSURE B Seismic Ss= 150% Seismic Design Category D Structures are Attached to Existing Building

Table 2.7c — cubic footing "d"; Constrained Footing (in) Max Post Length 8' / 12' / 15'

Header	Detail	trib 3'	Min Post Type	Uplift Footing (in)	8'	12'	15'	trib 3.5'	Min Post Type	Uplift Footing (in)	8'	12'	15'	trib 4'	Min Post Type	Uplift Footing (in)	8'	12'	15'	trib 4.5'	Min Post Type	Uplift Footing (in)	8'	12'	15'	trib 5'	Min Post Type	Uplift Footing (in)	8'	12'	15'	trib 5.5'	Min Post Type	Uplift Footing (in)	8'	12'	15'
On Slab	On Slab	11'-10"	A1					10'-2"	A1					8'-11"	A1					7'-11"	A1					7'-1"	A1					6'-5"	A1				
0.042"x3"x8"	L1	10'-5"	A1	20	20	22	24	9'-6"	A1	20	21	23	25	8'-8"	A1	20	22	24	26	8'-1"	A1	21	22	25	26	7'-7"	A1	21	23	26	27	7'-2"	A2	21	24	26	28
Double 3"x8"	L1, L12	15'-5"	A2	22	20	22	24	14'-3"	A2	23	21	23	25	13'-1"	A2	23	22	24	26	12'-4"	A2	24	22	25	26	11'-7"	B	24	23	26	27	11'-0"	C	25	24	26	28
Double 2"x6.625"	L2, L12	13'-9"	A2	22	20	22	24	12'-8"	A2	22	21	23	25	11'-9"	A2	23	22	24	26	11'-0"	A2	23	22	25	26	10'-5"	A2	23	23	26	27	9'-11"	A2	24	24	26	28
16 G Steel C	L18	18'-9"	A2	24	20	22	24	16'-11"	B	24	21	23	25	15'-3"	C	25	22	24	26	14'-1"	C	25	22	25	26	13'-1"	C	25	23	26	27	12'-3"	C	25	24	26	28
14 G Steel C	L18	22'-2"	C	25	20	22	24	20'-2"	C	26	21	23	25	18'-2"	C	26	22	24	26	16'-11"	C	26	22	25	26	15'-9"	C	27	23	26	27	14'-10"	D	27	24	26	28
12 G Steel C	L18	28'-0"	D	27	20	22	24	26'-8"	D	28	21	23	25	25'-6"	D	29	22	24	26	24'-0"	E	30	22	25	26	22'-7"	E	30	23	26	27	21'-4"	E	31	24	26	28
Double 16 G Steel C	L18, L8	29'-2"	D	28	20	22	24	27'-9"	D	29	21	23	25	26'-6"	E	30	22	24	26	25'-6"	E	30	22	25	26	24'-8"	E	31	23	26	27	23'-11"	E	32	24	26	28
Double 14 G Steel C	L18, L8	31'-1"	D	28	20	22	24	29'-7"	D	29	21	23	25	28'-4"	E	30	22	24	26	27'-3"	E	31	22	25	26	26'-4"	E	32	23	26	27	25'-6"	E	32	24	26	28
Double 12 G Steel C	L18, L8	35'-4"	E	30	21	23	25	33'-7"	E	31	22	24	25	32'-2"	E	31	22	24	26	30'-11"	E	32	22	25	26	29'-11"	F1	33	23	26	27	29'-0"	F1	34	24	26	28

Header	Detail	trib 6'	Min Post Type	Uplift Footing (in)	8'	12'	15'	trib 6.5'	Min Post Type	Uplift Footing (in)	8'	12'	15'	trib 7'	Min Post Type	Uplift Footing (in)	8'	12'	15'	trib 7.5'	Min Post Type	Uplift Footing (in)	8'	12'	15'	trib 8'	Min Post Type	Uplift Footing (in)	8'	12'	15'	trib 8.5'	Min Post Type	Uplift Footing (in)	8'	12'	15'
On Slab	On Slab	5'-11"	A1					5'-5"	A1					5'-1"	A1					4'-9"	A1					4'-5"	A1					4'-2"	A1				
0.042"x3"x8"	L1	6'-8"	A2	21	24	27	28	6'-4"	A2	22	25	27	29	6'-1"	A2	22	25	28	30	5'-9"	A2	22	26	28	30	5'-6"	A2	22	26	29	31	5'-3"	A2	22	26	29	31
Double 3"x8"	L1, L12	10'-5"	C	25	24	27	28	9'-11"	C	25	25	27	29	9'-6"	C	25	25	28	30	9'-2"	C	26	26	28	30	8'-9"	C	26	26	29	31	8'-5"	C	26	26	29	31
Double 2"x6.625"	L2, L12	9'-5"	A2	24	24	27	28	9'-0"	B	24	25	27	29	8'-8"	C	25	25	28	30	8'-4"	C	25	26	28	30	8'-0"	C	25	26	29	31	7'-8"	C	25	26	29	31
16 G Steel C	L18	11'-2"	C	25	24	27	28	10'-5"	C	25	25	27	29	9'-8"	C	25	25	28	30	9'-1"	C	25	26	28	30	8'-5"	C	25	26	29	31	7'-11"	C	25	26	29	31
14 G Steel C	L18	13'-10"	D	27	24	27	28	13'-1"	D	27	25	27	29	12'-5"	D	28	25	28	30	11'-10"	D	28	26	28	30	11'-3"	D	28	26	29	31	10'-9"	D	28	26	29	31
12 G Steel C	L18	20'-1"	E	31	24	27	28	19'-2"	E	31	25	27	29	18'-4"	E	31	25	28	30	17'-6"	E	32	26	28	30	16'-9"	E	32	26	29	31	16'-1"	E	32	26	29	31
Double 16 G Steel C	L18, L8	23'-3"	E	32	24	27	28	22'-6"	F1	33	25	27	29	21'-8"	F1	33	25	28	30	20'-11"	F1	34	26	28	30	20'-1"	F1	34	26	29	31	19'-5"	F1	34	26	29	31
Double 14 G Steel C	L18, L8	24'-9"	F1	33	24	27	28	24'-2"	F1	34	25	27	29	23'-7"	F1	34	25	28	30	23'-0"	F1	35	26	28	30	22'-6"	F1	35	26	29	31	22'-1"	F1	36	26	29	31
Double 12 G Steel C	L18, L8	28'-2"	F1	34	24	27	28	27'-5"	F1	35	25	27	29	26'-9"	F1	36	25	28	30	26'-2"	F1	36	26	28	30	25'-8"	F2	37	26	29	31	25'-1"	F2	37	26	29	31

Header	Detail	trib 9'	Min Post Type	Uplift Footing (in)	8'	12'	15'	trib 9.5'	Min Post Type	Uplift Footing (in)	8'	12'	15'	trib 10'	Min Post Type	Uplift Footing (in)	8'	12'	15'	trib 11'	Min Post Type	Uplift Footing (in)	8'	12'	15'	trib 12'	Min Post Type	Uplift Footing (in)	8'	12'	15'	trib 13'	Min Post Type	Uplift Footing (in)	8'	12'	15'
On Slab	On Slab	3'-11"	A1					3'-9"	A1					3'-6"	A1					3'-2"	A1					2'-11"	A1					2'-8"	A1				
0.042"x3"x8"	L1	5'-1"	A2	22	27	30	31	4'-10"	A2	22	27	30	32	4'-8"	A2	22	28	31	32	4'-4"	A2	23	28	31	33	4'-0"	A2	23	29	32	34	3'-9"	A2	23	29	33	35
Double 3"x8"	L1, L12	8'-2"	C	26	28	31	32	7'-11"	C	26	27	30	32	7'-7"	C	26	28	31	32	7'-2"	C	27	28	31	33	6'-9"	D	27	29	32	34	6'-5"	D	27	29	33	35
Double 2"x6.625"	L2, L12	7'-5"	C	25	27	30	31	7'-3"	C	26	27	30	32	7'-0"	C	26	28	31	32	6'-7"	C	26	28	31	33	6'-3"	C	26	29	32	34	5'-11"	C	27	29	33	35
16 G Steel C	L18	7'-6"	C	25	27	30	32	7'-2"	C	25	27	30	32	6'-9"	C	25	28	31	32	6'-2"	C	25	28	31	33	5'-7"	C	25	29	32	34	5'-2"	C	25	29	33	35
14 G Steel C	L18	10'-2"	D	28	29	32	34	9'-8"	D	28	29	32	34	9'-1"	D	28	28	32	33	8'-4"	D	28	28	31	33	7'-7"	D	28	29	32	34	7'-1"	D	28	29	33	35
12 G Steel C	L18	15'-7"	E	32	33	36	38	15'-0"	E	33	32	36	38	14'-5"	E	33	32	35	37	13'-7"	F1	33	31	35	37	12'-9"	F1	33	31	34	36	12'-2"	F1	34	31	34	36
Double 16 G Steel C	L18, L8	18'-10"	F1	35	34	38	40	18'-4"	F1	35	34	38	40	17'-9"	F1	35	34	37	39	16'-10"	F1	36	33	37	39	16'-0"	F1	36	33	36	38	15'-3"	F1	36	32	36	38
Double 14 G Steel C	L18, L8	21'-6"	F1	36	35	39	41	20'-11"	F1	36	35	39	41	20'-4"	F1	37	35	39	41	19'-4"	F2	37	34	38	40	18'-5"	F2	38	34	38	40	17'-8"	F2	38	34	37	39
Double 12 G Steel C	L18, L8	24'-8"	F2	38	37	41	43	24'-3"	F2	38	36	40	43	23'-10"	F2	39	36	40	42	23'-1"	F3	40	36	40	42	22'-5"	F3	40	36	40	42	21'-10"	F3	41	35	39	42

Header	Detail	trib 14'	Min Post Type	Uplift Footing (in)	8'	12'	15'	trib 15'	Min Post Type	Uplift Footing (in)	8'	12'	15'	trib 16'	Min Post Type	Uplift Footing (in)	8'	12'	15'	trib 17'	Min Post Type	Uplift Footing (in)	8'	12'	15'	trib 18'	Min Post Type	Uplift Footing (in)	8'	12'	15'	trib 19'	Min Post Type	Uplift Footing (in)	8'	12'	15'
On Slab	On Slab	2'-6"	A1					2'-4"	A1					2'-2"	A1					2'-1"	A1					1'-11"	A1					1'-10"	A1				
0.042"x3"x8"	L1	3'-7"	A2	23	30	33	35	3'-4"	A2	23	31	34	36	3'-2"	A2	23	31	34	36	3'-0"	A2	23	32	35	37	2'-10"	A2	23	32	35	38	2'-9"	A2	23	32	36	38
Double 3"x8"	L1, L12	6'-1"	D	27	30	33	35	5'-9"	D	28	31	34	36	5'-6"	D	28	31	34	36	5'-3"	D	28	32	35	37	5'-1"	D	28	32	35	38	4'-10"	D	28	32	36	38
Double 2"x6.625"	L2, L12	5'-8"	D	27	30	33	35	5'-5"	D	27	31	34	36	5'-2"	D	27	31	34	36	5'-0"	D	27	32	35	37	4'-9"	D	28	32	35	38	4'-7"	D	28	32	36	38
16 G Steel C	L18	4'-10"	C	25	30	33	35	4'-6"	C	25	31	34	36	4'-3"	C	25	31	34	36	4'-0"	C	25	32	35	37	3'-9"	C	25	32	35	38	3'-7"	C	25	32	36	38
14 G Steel C	L18	6'-6"	D	28	30	33	35	6'-1"	D	28	31	34	36	5'-8"	D	28	31	34	36	5'-5"	D	28	32	35	37	5'-1"	D	28	32	35	38	4'-10"	D	28	32	36	38
12 G Steel C	L18	11'-6"	F1	34	30	33	35	11'-0"	F1	34	31	34	36	10'-6"	F1	34	31	34	36	10'-1"	F1	35	32	35	37	9'-8"	F1	35	32	35	38	9'-4"	F1	35	32	36	38
Double 16 G Steel C	L18, L8	14'-7"	F2	37	32	35	38	14'-0"	F2	37	32	35	37	13'-6"	F2	37	31	35	37	13'-0"	F2	38	32	35	37	12'-6"	F2	38	32	35	38	12'-2"	F2	38	32	36	38
Double 14 G Steel C	L18, L8	17'-0"	F2	39	33	37	39	16'-5"	F2	39	33	37	39	15'-10"	F3	39	33	36	38	15'-4"	F3	40	32	36	38	14'-10"	F3	40	32	36	38	14'-5"	F3	41	32	36	38
Double 12 G Steel C	L18, L8	21'-4"	F4	42	35	39	41	20'-7"	F4	42	35	39	41	19'-11"	F4	43	35	38	41	19'-4"	F4	43	34	38	40	18'-9"	F4	43	34	38	40	18'-3"	F5	44	34	38	40

Amerimax Exterior Home Products
28921 US Hwy 74
Romoland, CA 92585

Carl Putnam, P. E.
3441 Ivylink Place
Lynchburg, VA 24503
(434) 384-2514
carlputnam@comcast.net

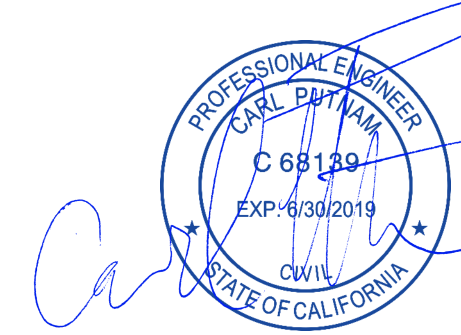

May 27 2017

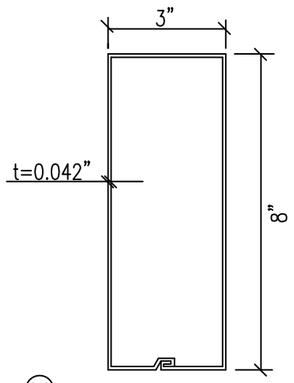

L1 HEADER
(3004–H34 ALUM. ALLOY)

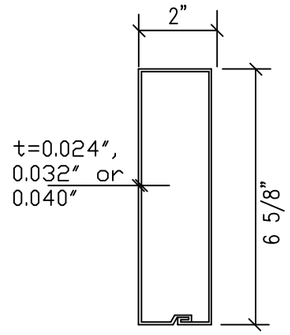

L2 RAFTER & SIDEPLATES
(3004–H34 ALUM. ALLOY)

L3

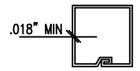

LATTICE TUBES
1.5"x1.5" @3" o/c
2"x2" @4" o/c
3"x3" @6" o/c DETAIL L4
2"X3" @5" o/c

LATTICE
3105 H24
ALUM ALLOY

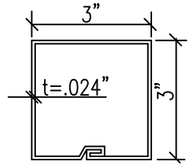

L4 POST/RAFTER/LATTICE TUBE
(3004–H34 ALUM. ALLOY)

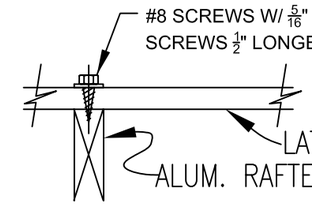

L6 LATTICE TO
RAFTER CONN.

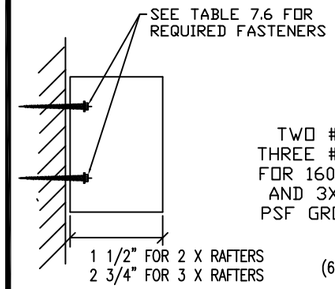

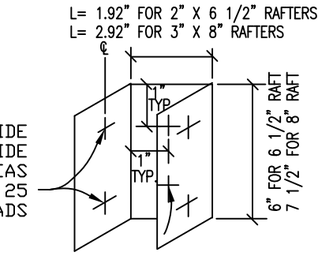

TWO #8 SMS EACH SIDE
THREE #8 SMS EACH SIDE
FOR 160 MPH WIND AREAS
AND 3X8 RAFTERS IN 25
PSF GROUND SNOW LOADS

(6063–T5 ALUM. ALLOY, 't'= 0.078")

L7 RAFTER HANGER

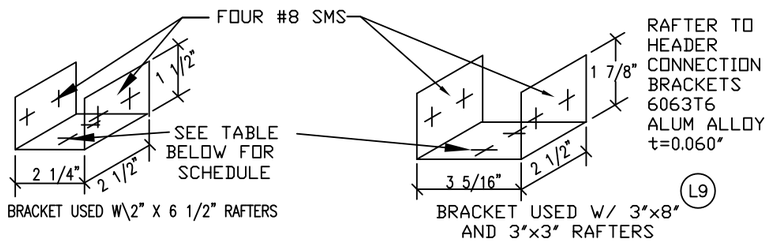

L9

Wind Speed	t (in)	Header	Allowable Trib Width No. of #8 Screws 2	3	4	5
115 mph Exp C	0.040	Double 2x6	11'	17'	20'	
	0.042	0.042"x3"x8"	6'	9'	12'	15'
	0.042	Double 3x8	12'	18'	20'	
160 mph Exp C	0.040	Double 2x6	7'	10'	14'	17'
	0.042	0.042"x3"x8"	4'	5'	7'	9'
	0.042	Double 3x8	7'	11'	14'	18'
			#14 Screws			
180 mph Exp C	0.040	Double 2x6	7'	11'	14'	18'
	0.042	0.042"x3"x8"	4'	6'	8'	9'
	0.042	Double 3x8	8'	11'	15'	19'
160 mph Exp C	16G min	8" Steel C	12'	18'	20'	
	16G min	Double Steel C	20'			
180 mph Exp C	16G min	8" Steel C	9'	14'	19'	20'
	16G min	Double Steel C	19'	20'		

DOUBLE HEADERS USE
ONE BRACKET
PER HEADER

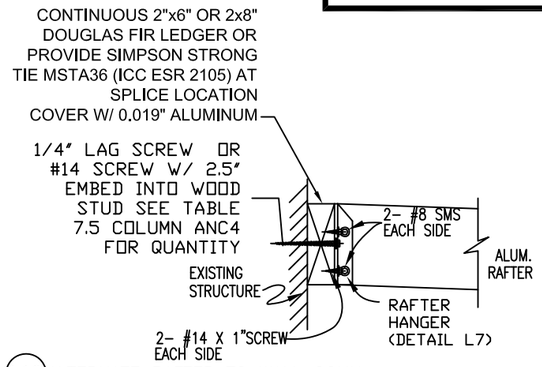

L10 ALTERNATE RAFTER TO WALL CONN.

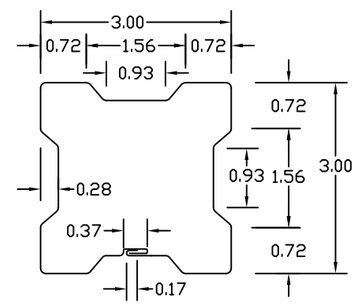

t = 0.030" ALUM
= 0.040" ALUM
= 0.041" STEEL

L11 3" ALTERNATE POST
(3105 H25 ALUM. ALLOY OR
A–653 Fy=40 KSI STEEL)

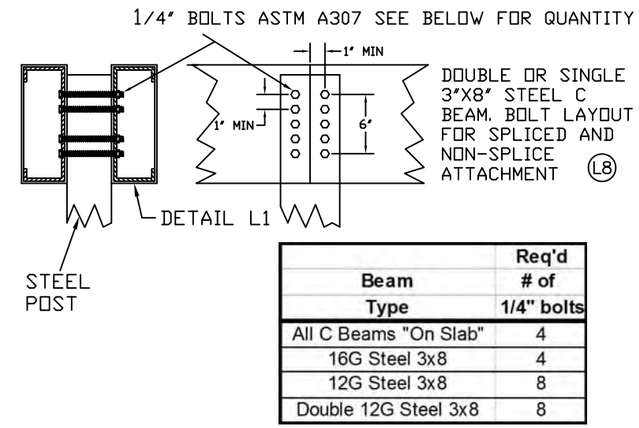

L8

Beam Type	Req'd # of 1/4" bolts
All C Beams "On Slab"	4
16G Steel 3x8	4
12G Steel 3x8	8
Double 12G Steel 3x8	8

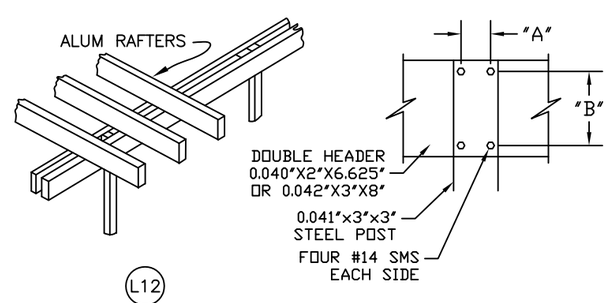

L12

NOTE: SEE SHEET MISC5a OR MISC5b
FOR MOMENT CONNECTION SPECS

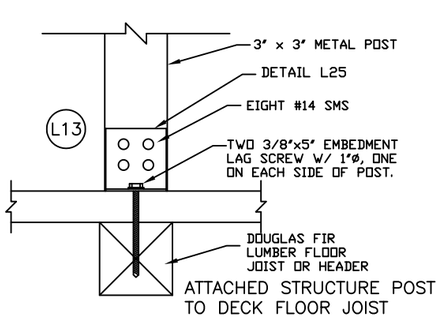

L13

ATTACHED STRUCTURE POST
TO DECK FLOOR JOIST

SEE GENERAL NOTE #19 AND
LATTICE NOTE #3
UNITS MUST COMPY WITH
TABLES L1 AND L2 ON SHEET
M5

MAX WIND SPEED
IS 150 mph
EXPOSURE C

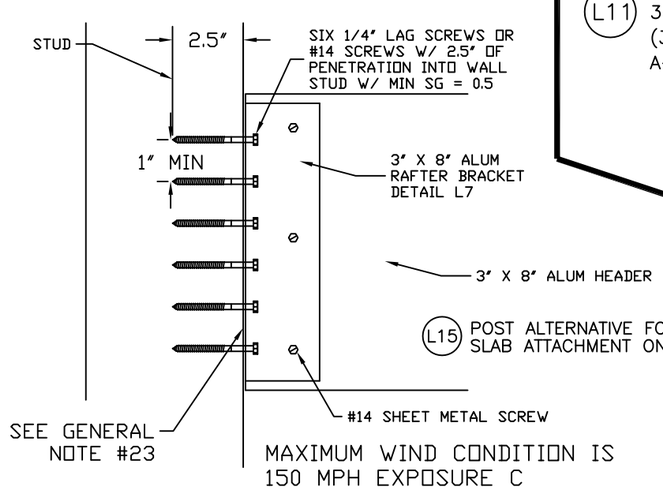

L15 POST ALTERNATIVE FOR
SLAB ATTACHMENT ONLY

MAXIMUM WIND CONDITION IS
150 MPH EXPOSURE C

PROFESSIONAL ENGINEER
CARL PUTNAM
C 68139
EXP. 6/30/2019
CIVIL
STATE OF CALIFORNIA

May 27 2017
Engineer's Stamp

Amerimax
EXTERIOR HOME PRODUCTS

28921 US Hwy 74
Romoland, CA 92585

DRAWN BY: BEJ/CP	TYPE:
SCALE: NTS	Component Parts & Connection Details For Patio & Commercial Lattice Structures
DATE:	FILE#: LT01–2015 — SHEET: 1 of 4

ICC ESR 1398 (2015 IBC) 1/12/2017

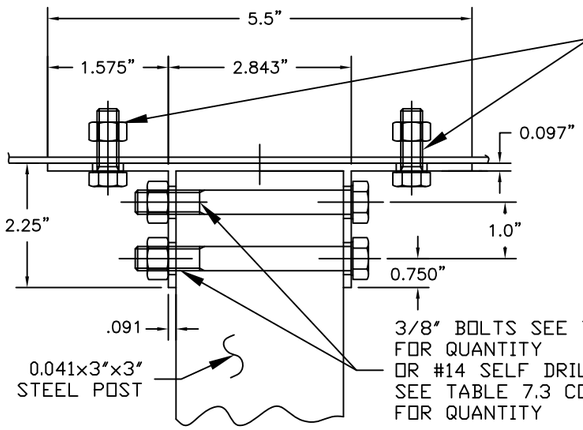

3/8" BOLTS W/ 1" DIA.
x 3/32" THK. STL. WASHER
TO 8" STEEL "C" BEAM
SEE TABLE 7.4 COLUMN "N"
FOR QUANTITY
FOR #14 SELF DRILLING
SCREWS SEE TABLE 7.4
COLUMN "L".

ALTERNATE 3" SQ POST CONNECTOR
BRACKET (6063T6 ALUM)
IF DETAIL L29 IS NOT USED ATTACH
SIDE PLATES AS PER DETAIL L26

3/8" BOLTS SEE TABLE 7.3 COLUMN "H"
FOR QUANTITY
OR #14 SELF DRILLING SCREWS
SEE TABLE 7.3 COLUMN "G"
FOR QUANTITY

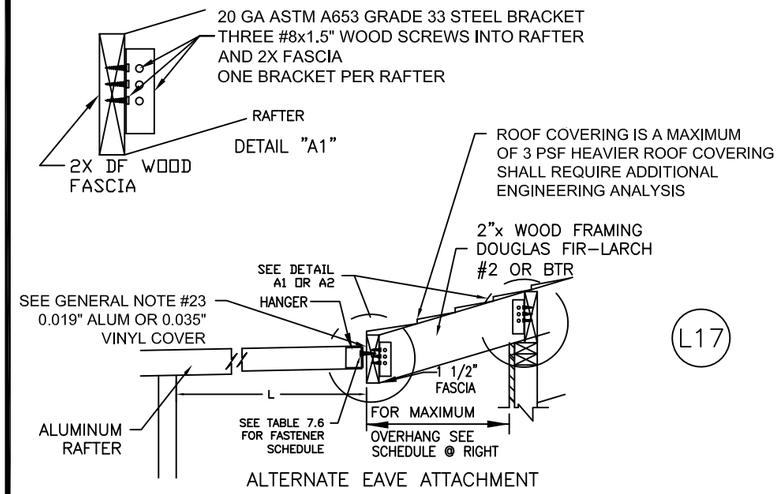

ALTERNATE EAVE ATTACHMENT

Live Snow	RAFTER SIZE	MAX DISTANCE TO FIRST ROW OF POSTS "L" EAVE OVERHANG 6"	12"	18"	24"	30"
10 psf 140 mph Exp C	2x4	21'-1'	18'-10'	10'-10'	6'-6'	3'-4'
	2x6	21'-1'	21'-1'	21'-1'	21'-1'	15'-7'
	2x8	21'-1'	21'-1'	21'-1'	21'-1'	21'-1'
20 psf 140 mph Exp C	2x4	12'-4'	9'-10'	5'-8'	3'-4'	1'-9'
	2x6	12'-4'	12'-4'	12'-4'	11'-4'	8'-2'
	2x8	12'-4'	12'-4'	12'-4'	12'-4'	12'-4'
25 psf 140 mph Exp C	2x4	11'-9'	9'-4'	5'-4'	3'-1'	1'-7'
	2x6	11'-9'	11'-9'	11'-9'	10'-9'	7'-8'
	2x8	11'-9'	11'-9'	11'-9'	11'-9'	11'-9'
30 psf 140 mph Exp C	2x4	9'-10'	7'-8'	4'-3'	2'-3'	0'-10'
	2x6	9'-10'	9'-10'	9'-10'	8'-8'	6'-0'
	2x8	9'-10'	9'-10'	9'-10'	9'-10'	9'-10'
36 psf 140 mph Exp C	2x4	8'-3'	6'-4'	3'-4'	1'-7'	0'-4'
	2x6	8'-3'	8'-3'	8'-3'	7'-1'	4'-8'
	2x8	8'-3'	8'-3'	8'-3'	8'-3'	8'-3'
42 psf 140 mph Exp C	2x4	7'-1'	5'-3'	2'-8'	1'-1'	0'-0'
	2x6	7'-1'	7'-1'	7'-1'	5'-9'	3'-8'
	2x8	7'-1'	7'-1'	7'-1'	7'-1'	7'-1'
50 psf 140 mph Exp C	2x4	6'-0'	4'-3'	2'-0'	0'-7'	0'-0'
	2x6	6'-0'	6'-0'	6'-0'	4'-6'	2'-8'
	2x8	6'-0'	6'-0'	6'-0'	6'-0'	6'-0'
60 psf 140 mph Exp C	2x4	5'-0'	3'-6'	1'-6'	0'-2'	0'-0'
	2x6	5'-0'	5'-0'	5'-0'	3'-6'	1'-10'
	2x8	5'-0'	5'-0'	5'-0'	5'-0'	5'-0'

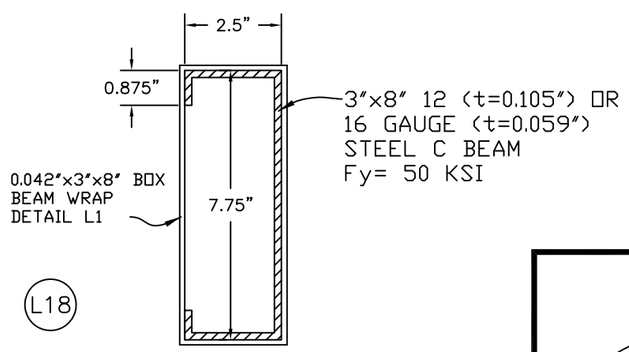

12 and 16 GA 3"x8" STEEL C BEAM
W/ 0.042"X3"X8" ALUM WRAP

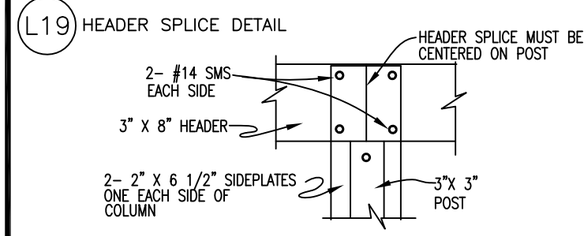

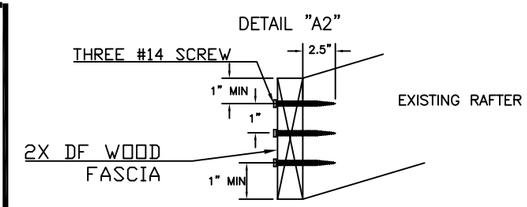

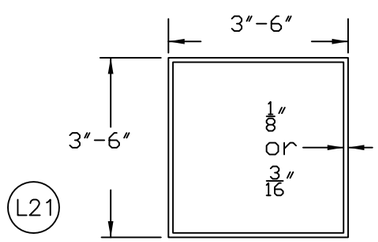

3", 4", 5" OR 6" ASTM A500
GRADE B STEEL POST
SEE GENERAL NOTE #9 FOR
CORROSION PROTECTION

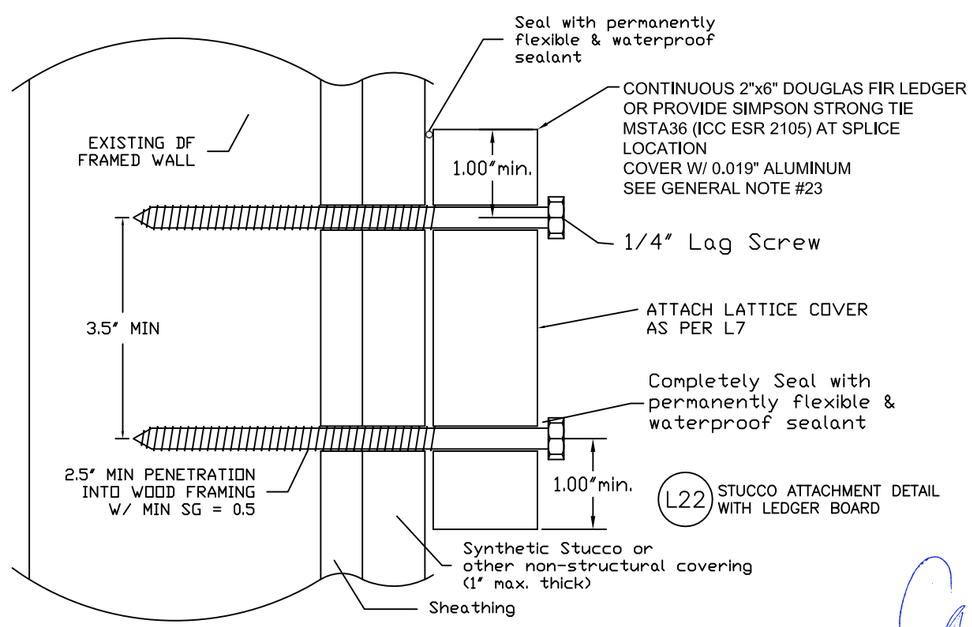

SEE ALLOWABLE DISTANCE TO FIRST
ROW OF POSTS IN TABLE 7.7

PROFESSIONAL ENGINEER
CARL PUTNAM
C 68139
EXP. 6/30/2019
CIVIL
STATE OF CALIFORNIA

May 27 2017
Engineer's Stamp

Amerimax EXTERIOR HOME PRODUCTS
28921 US Hwy 74
Romoland, CA 92585

DRAWN BY: BEJ/CP	TYPE:
SCALE: NTS	Component Parts & Connection Details For Patio & Commercial Lattice Structures
DATE:	FILE#: LT02-2015 — SHEET: 2 of 4

ICC ESR 1398 (2015 IBC) 1/12/2017

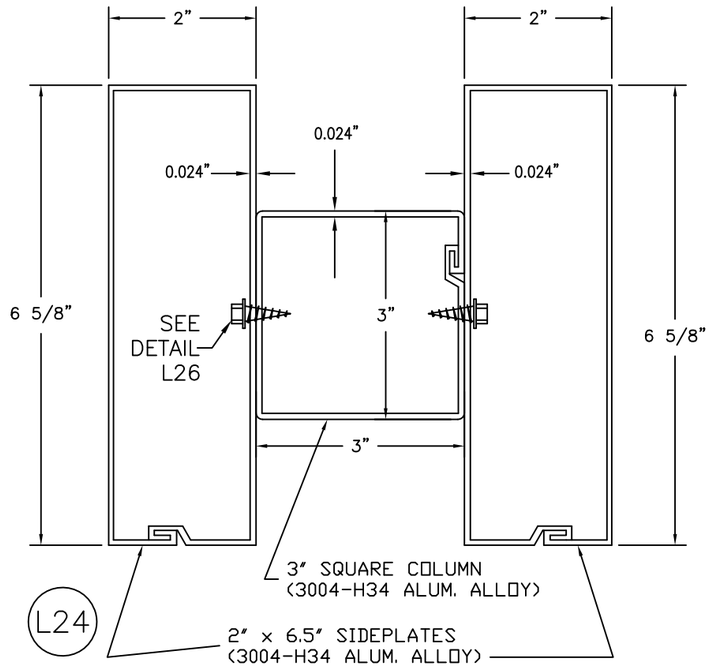

L24

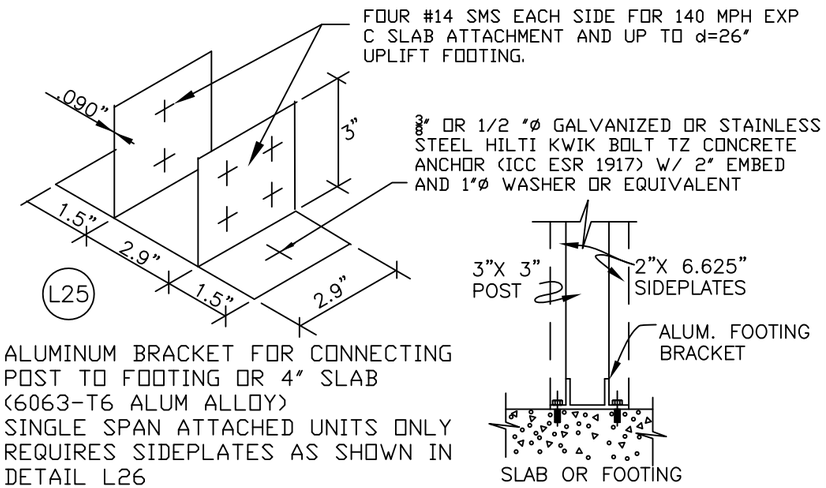

L25

ALUMINUM BRACKET FOR CONNECTING POST TO FOOTING OR 4" SLAB (6063-T6 ALUM ALLOY)
SINGLE SPAN ATTACHED UNITS ONLY REQUIRES SIDEPLATES AS SHOWN IN DETAIL L26

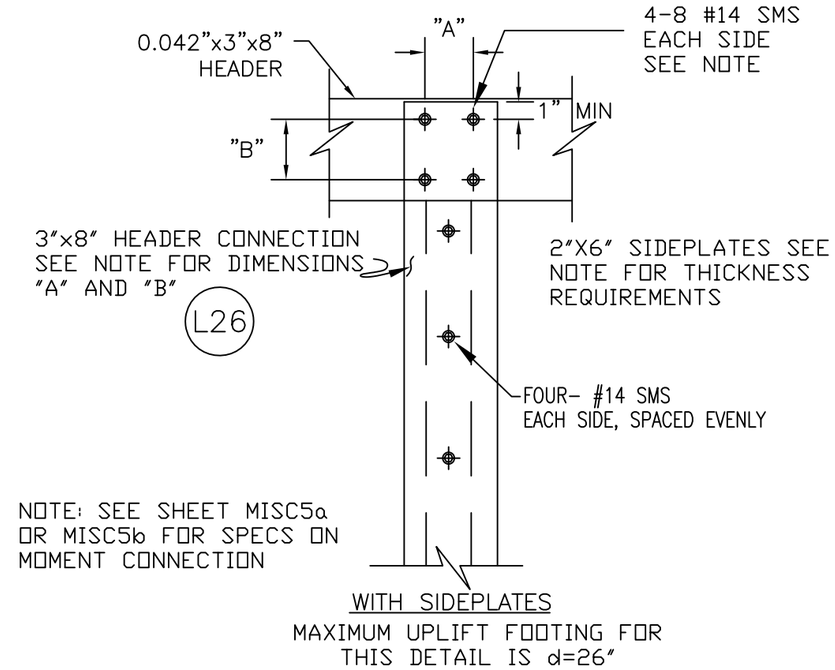

L26

MAXIMUM UPLIFT FOOTING FOR THIS DETAIL IS d=26"

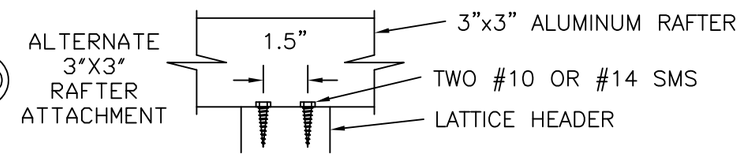

L30

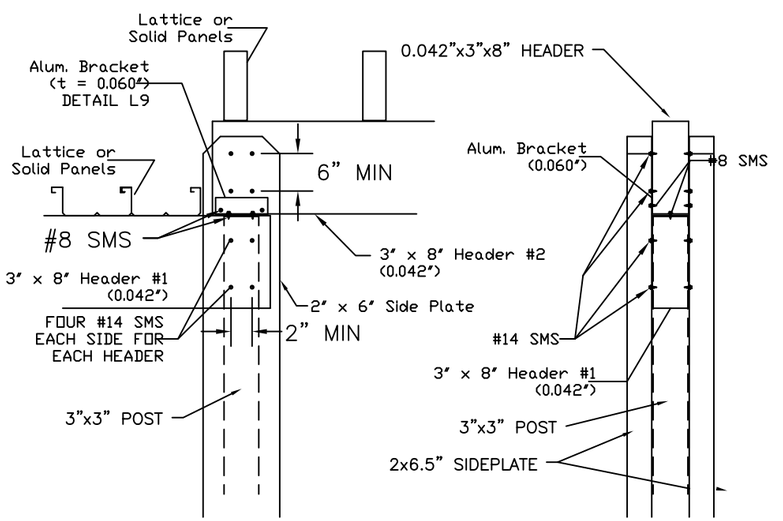

L27 ALTERNATIVE SPLICE FOR ATTACHED UNITS
MAXIMUM FOOTING SIZE IS d=26"

Live Load (psf)	Wind Speed and Exposure	MAX "L" FOR TOP OR SIDE MOUNT 16" o/c	24"o/c
10	130 mph Exp B	21'-8"	14'-5"
	140 mph Exp B	20'-7"	13'-8"
	115 mph Exp C	21'-8"	14'-5"
	130 mph Exp C	19'-8"	13'-1"
	140 mph Exp C	17'-1"	11'-5"
20	140 mph Exp C	11'-4"	7'-6"

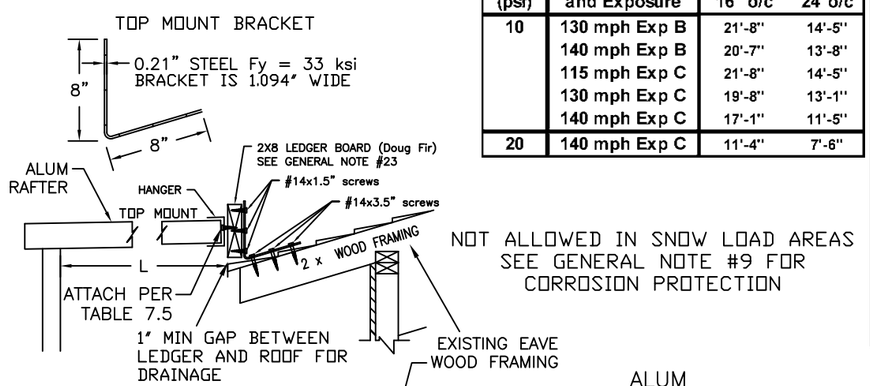

NOT ALLOWED IN SNOW LOAD AREAS SEE GENERAL NOTE #9 FOR CORROSION PROTECTION

ALL HOUSE PENETRATIONS MUST BE COMPLETELY AND PERMANENTLY SEALED

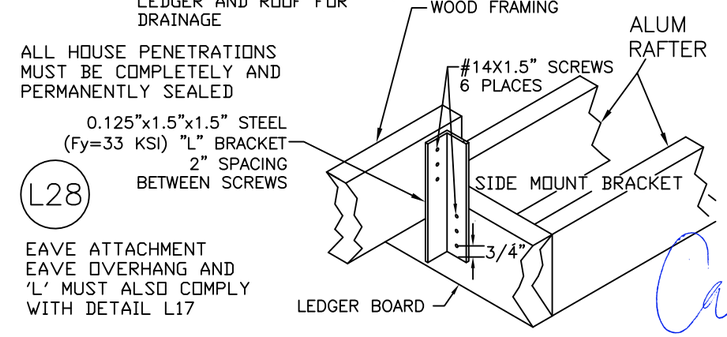

L28

EAVE ATTACHMENT EAVE OVERHANG AND 'L' MUST ALSO COMPLY WITH DETAIL L17

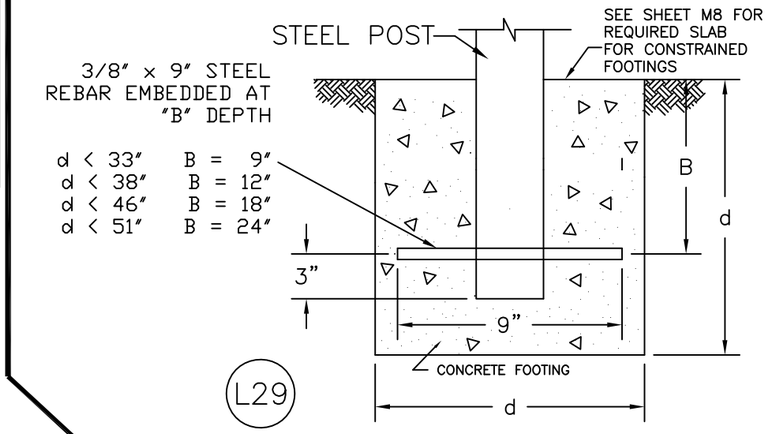

L29

FREESTANDING OR ATTACHED STRUCTURE COLUMN TO FOOTING CONNECTION DETAIL

PROFESSIONAL ENGINEER CARL PUTNAM C68139 EXP. 6/30/2019 CIVIL STATE OF CALIFORNIA

May 27 2017
Engineer's Stamp

Amerimax EXTERIOR HOME PRODUCTS
28921 US Hwy 74
Romoland, CA 92585

DRAWN BY: BEJ/CP	TYPE:
SCALE: NTS	Component Parts & Connection Details For Patio & Commercial Lattice Structures
DATE:	FILE#: LT03-2015 — SHEET: 3 of 4

ICC ESR 1398 (2015 IBC) 1/12/2017

L31 UNDERHUNG DOUBLE RAFTERS

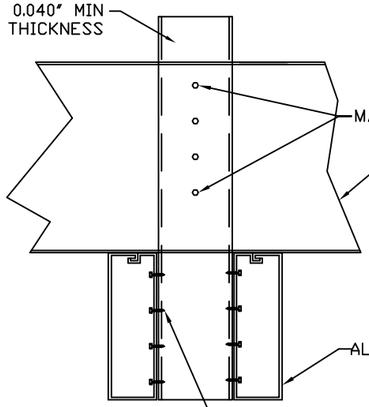

2"X6.625" RAFTERS USE
1 SCREW FOR 10 PSF AND 115 MPH EXP C
2 SCREWS FOR 60 PSF AND 180 MPH EXP C
3"X8" RAFTERS USE
2 SCREWS FOR 10 PSF AND 170 MPH EXP C
3 SCREWS FOR 60 PSF AND 180 MPH EXP C

L32 DOUBLE RAFTERS

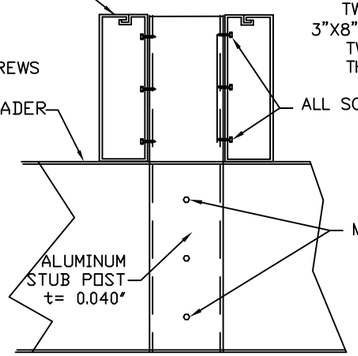

2"X6.625" ALUM RAFTERS USE
ONE #14 SMS UP TO 115 MPH EXP C
TWO #14 SMS UP TO 180 MPH EXP C
3"X8" RAFTERS USE
TWO #14 SMS UP TO 30 MPH EXP C
THREE #14 SMS UP TO 180 MPH EXP C

ALL SCREWS REQUIREMENTS ARE PER RAFTER

HEADER ATTACHMENT TO WALL

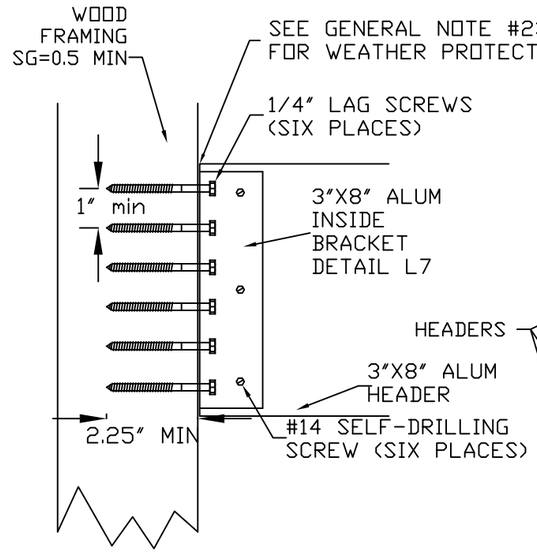

MAY NOT ATTACH HEADER OVER WINDOW OR OTHER WALL OPENING

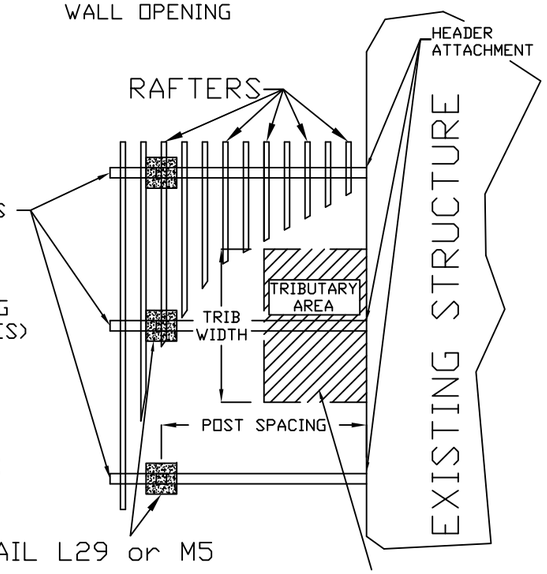

L34

DETAIL L29 or M5

MAX TRIBUTARY AREA
79 SQ. FT FOR 10 PSF
41 SQ FT FOR 20 PSF
47 SQ FT FOR 25 PSF GSL*
40 SQ FT FOR 30 PSF GSL*
*GROUND SNOW LOAD

CHECK POST SPACING FOR HEADER IN TABLES

L33 CRIPPLE RESISTANT CONNECTION FOR RAFTERS

ALUMINUM RAFTER DETAIL L1 OR L2

DOUBLE RAFTERS USING THIS DETAIL MAY BE SPACED AS PER TABLES 1.13-1.20 OR SINGLE RAFTERS MAY USE HALF OF THAT SPACING (ex: 48" FOR DOUBLE, 24" FOR SINGLE)

RAFTER HANGING BRACKET DETAIL L7

(2) #8 SCREWS FOR ALL GROUND SNOW LOADS UP TO 42 PSF
(4) #8 SCREWS FOR 42 to 60 PSF GROUND SNOW LOAD

3X8 HEADER

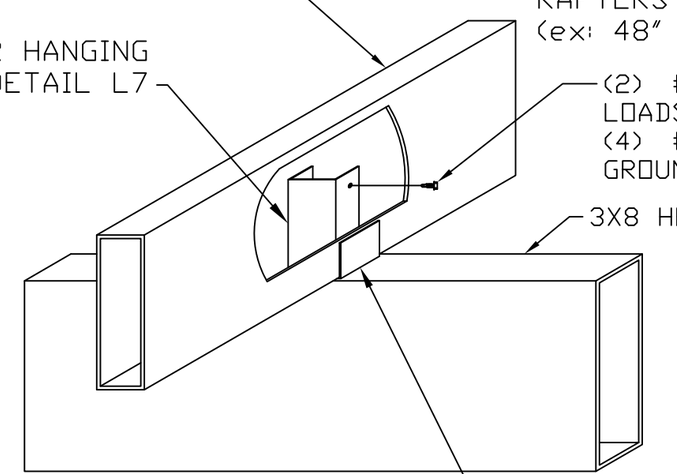

SECTIONED VIEW

RAFTER MOUNTING BRACKET ATTACHED AS PER DETAIL L9

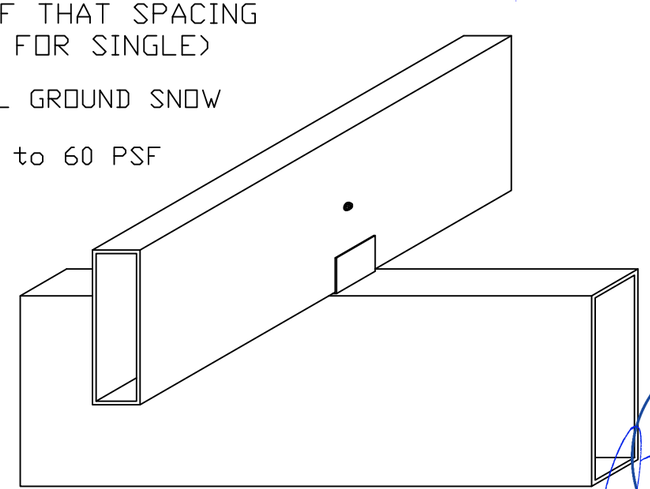

ASSEMBLED VIEW

PROFESSIONAL ENGINEER CARL PUTNAM C 68139 EXP 6/30/2019 CIVIL STATE OF CALIFORNIA

May 27 2017

Engineer's Stamp

Amerimax EXTERIOR HOME PRODUCTS
28921 US Hwy 74
Romoland, CA 92585

DRAWN BY: CP	TYPE:	
SCALE: NTS	Component Parts & Connection Details For Patio & Commercial Lattice Structures	
DATE:	FILE#: LT04-2015	SHEET: 4 of 4

SECTION 4.0 SOLID COVER INSTRUCTIONS AND POST TABLES

GENERAL INSTRUCTIONS FOR THESE TABLES

1. CHOOSE FREESTANDING OR ATTACHED STRUCTURE
2. CHOOSE PROJECTION, WIDTH AND OVERHANG OF UNIT
3. DETERMINE WIND AND LIVE OR SNOW LOAD OF STRUCTURE SITE
   (PATIO UNITS USE 10 PSF MIN, COMMERCIAL UNITS USE 20 PSF MIN)
4. CHOOSE A PANEL FROM **SECTION 4.0** THAT HAS
   ADEQUATE CLEARSPAN FOR YOUR NEEDS.
5. DETERMINE TRIBUTARY WIDTH FROM TABLE 4.1 OR CALCULATE
   FROM TRIBUTARY DIAGRAM ON **SC02 PAGE 2 OF 2**
6. LOCATE HEADER TABLE IN **SECTION 5.0** W/ CORRECT PARAMETERS
   a. GROUND SNOW LOAD, SEE GEN NOTE #3
   b. LIVE LOAD, SEE #3 ABOVE
   c. WIND SPEED, SEE GEN NOTE #3
   d. EXPOSURE, SEE GEN NOTE #3
   e. SEISMIC, SEE GEN NOTE #3
   f. ATTACHED OR FREESTANDING
   g. a-e ARE SET BY YOUR LOCAL BUILDING AUTHORITY
7. CHOOSE A HEADER FROM TABLES IN **SECTION 5.0** THAT HAS ADEQUATE POST SPACING
8. DETERMINE FOOTING SIZE
   USE THE UPLIFT FOOTING IF **BOTH** OF THESE CONDITIONS ARE MET
   a. STRUCTURE IS ATTACHED TO AN EXISTING STRUCTURE
   b. PROJECTION IS EQUAL OR SHORTER THAN THE WIDTH (SEE SHEET SC01)
   c. GO TO #9a

   IF **EITHER** a OR b ARE **NOT** TRUE THEN:
   a. CHOOSE CONSTRAINED FOOTING SIZE BASED ON THE 3 CHOICES OF POST HEIGHT
   b. USE THE **LARGER** OF THE UPLIFT OR CONSTRAINED FOOTING SIZE
   c. CONSTRAINED FOOTINGS **MUST** USE DETAIL N29, AQ OR M5
   d. GO TO 9b

9. DETERMINE POST TYPE
   a. IF **BOTH** 8a AND 8b ARE TRUE THEN USE POST SHOWN IN TABLE UNDER "MIN POST TYPE"
      CROSS REFERENCE LETTER CODE W/ TABLE 4.2
      IF THIS POST'S MAX HEIGHT IS TOO SHORT, UPGRADE THE POST.

   b. IF EITHER 8a OR 8b ARE **NOT** TRUE THEN:
      DETERMINE POST TYPE FROM CROSS REFERENCING THE UPLIFT FOOTING AND
      CONSTRAINED FOOTING ON TABLE 4.3
      example: A 40" UPLIFT FOOTING AND A 20" CONSTRAINED FOOTING
      ARE REQUIRED. POST TYPE "F1" IS REQUIRED. TABLE 4.2 SHOWS POST TYPE
      "F1" TO BE A 0.041"X3"X3" STEEL CLOVER POST WITH A MAX HEIGHT OF 11'.
10. IF STRUCTURE IS ATTACHED FIND THE O/C SPACING OR # OF FASTENERS FOR ATTACHING TO
    WALL FROM TABLE 7.5 OR TABLE 7.7
11. USE THE APPROPRIATE DETAILS (N1-N35 or A-BM)

FOR PATIO SLABS FOLLOW 1-7 FROM ABOVE THEN

SLAB 7. USE THE SMALLER OF THE POST SPACING ON SLAB OR HEADER POST SPACING
SLAB 8. BOTH 8a AND 8b MUST BE TRUE
SLAB 9. FOLLOW **9a** FROM ABOVE
SLAB 10. FOLLOW 10 AND 11 FROM ABOVE
SLAB 11. FOR **TWO** POST STRUCTURES USE **TABLE 7.1** ON SHEET **Misc3** FOR SLAB REQUIREMENTS
INSTEAD OF SECTION 5.0

PROFESSIONAL ENGINEER
CARL PUTNAM
C 68139
EXP. 6/30/2019
CIVIL
STATE OF CALIFORNIA

May 27 2017

TABLE 4.1 TRIBUTARY WIDTHS FOR SINGLE SPAN ATTACHED STRUCTURES

OVER-HANG	PROJECTION OF SINGLE SPAN STRUCTURES (FT)																
	6'	7'	8'	9'	10'	11'	12'	13'	14'	15'	16'	17'	18'	19'	20'	21'	22'
0'	3'	3.5'	4'	4.5'	5'	5.5'	6'	6.5'	7'	7.5'	8'	8.5'	9'	9.5'	10'	10.5'	11'
1'	3.5'	4'	4.5'	5'	5.5'	6'	6.5'	7'	7.5'	8'	8.5'	9'	9.5'	10'	10.5'	11'	11.5'
2'	n/a	n/a	n/a	5.5'	6'	6.5'	7'	7.5'	8'	8.5'	9'	9.5'	10'	10.5'	11'	11.5'	12'
3'	n/a	n/a	n/a	n/a	n/a	n/a	n/a	8'	8.5'	9'	9.5'	10'	10.5'	11'	11.5'	12'	12.5'
4'	n/a	n/a	n/a	n/a	n/a	n/a	n/a	n/a	n/a	n/a	n/a	10.5'	11'	11.5'	12'	12.5'	13'
5'	n/a	n/a	n/a	n/a	n/a	n/a	n/a	n/a	n/a	n/a	n/a	n/a	n/a	n/a	n/a	13'	13.5'

Table 4.2

Post Description	Max Hgt	POST Type	Detail
Twin 0.060"x1.5"x1.5" Scroll	10'	A1	AC
0.042"x3"x8" Aluminum Post	12'	A2	N30
0.024"x3"x3"Post with Sideplates	10'	B	N16, BK
Clover 0.030"x3"x3" Alum	11'	C	N11, AH
Clover 0.040"x3"x3" Alum	11'	D	N11, AH
Colonial 0.062" Extruded	11'	E	AE
0.041"x3"x3" Steel Clover	11'	F1	N11, AH
0.041"x3"x3" Steel Clover	10'	F2	N11, AH
0.041"x3"x3" Steel Clover	9'	F3	N11, AH
0.041"x3"x3" Steel Clover	8'	F4	N11, AH
0.041"x3"x3" Steel Clover	7'	F5	N11, AH
1/8"x3"x3" Steel Square	12'	G1	N17, AG
1/8"x3"x3" Steel Square	10'	G2	N17, AG
3/16"x3"x3" Steel Square	12'	H1	N17, AG
3/16"x3"x3" Steel Square	10'	H2	N17, AG
3/16"x4"x4" Steel Square	15'	I1	N17, AG
3/16"x4"x4" Steel Square	12'	I2	N17, AG
3/16"x5"x5" Steel Square	15'	J1	N17, AG
3/16"x6"x6" Steel Square	15'	K1	N17, AG

TABLE 4.3

Uplift	Constrained d (in)																																		
d (in)	16	17	18	19	20	21	22	23	24	25	26	27	28	29	30	31	32	33	34	35	36	37	38	39	40	41	42	43	44	45	46	47	48	49
14	F1	F1	F1	F1	F1	F1	F1	F1	G1	G1	G1	G1	G1	G1	G1	G1	H1	H1	H2	H2	H2	H2	H2	H2	I2	I2	I2	I2	I2	K1	K1	K1	K1	K1
15	F1	F1	F1	F1	F1	F1	F1	F1	G1	G1	G1	G1	G1	G1	G1	G1	H1	H1	H2	H2	H2	H2	H2	H2	I2	I2	I2	I2	I2	K1	K1	K1	K1	K1
16	F1	F1	F1	F1	F1	F1	F1	F1	G1	G1	G1	G1	G1	G1	G1	G1	H1	H1	H2	H2	H2	H2	H2	H2	I2	I2	I2	I2	I2	K1	K1	K1	K1	K1
17	F1	F1	F1	F1	F1	F1	F1	F1	G1	G1	G1	G1	G1	G1	G1	G2	H1	H1	H2	H2	H2	H2	H2	H2	I2	I2	I2	I2	I2	K1	K1	K1	K1	K1
18	F1	F1	F1	F1	F1	F1	F1	F1	G1	G1	G1	G1	G1	G1	G1	G2	H1	H1	H2	H2	H2	H2	H2	H2	I2	I2	I2	I2	I2	K1	K1	K1	K1	K1
19	F1	F1	F1	F1	F1	F1	F1	F1	G1	G1	G1	G1	G1	G1	G1	H1	H1	H1	H2	H2	H2	H2	H2	H2	I2	I2	I2	I2	I2	K1	K1	K1	K1	K1
20	F1	F1	F1	F1	F1	F1	F1	F1	G1	G1	G1	G1	G1	G1	G1	H1	H1	H1	H2	H2	H2	H2	H2	H2	I2	I2	I2	I2	I2	K1	K1	K1	K1	K1
21	F1	F1	F1	F1	F1	F1	F1	F1	G1	G1	G1	G1	G1	G1	G1	H1	H1	H1	H2	H2	H2	H2	H2	H2	I2	I2	I2	I2	I2	K1	K1	K1	K1	K1
22	F1	F1	F1	F1	F1	F1	F1	F2	G1	G1	G1	G1	G1	G1	G1	H1	H1	H1	H2	H2	H2	H2	H2	H2	I2	I2	I2	I2	I2	K1	K1	K1	K1	K1
23	F1	F1	F1	F1	F1	F1	F1	F2	G1	G1	G1	G1	G1	G1	G1	H1	H1	H1	H2	H2	H2	H2	H2	H2	I2	I2	I2	I2	I2	K1	K1	K1	K1	K1
24	F1	F1	F1	F1	F1	F1	F1	F3	G1	G1	G1	G1	G1	G1	G1	H1	H1	H1	H2	H2	H2	H2	H2	H2	I2	I2	I2	I2	I2	K1	K1	K1	K1	K1
25	F1	F1	F1	F1	F1	F1	F1	F4	G1	G1	G1	G1	G1	G1	G1	H1	H1	H1	H2	H2	H2	H2	H2	H2	I2	I2	I2	I2	I2	K1	K1	K1	K1	K1
26	F1	F1	F1	F1	F1	F1	F1	F5	G1	G1	G1	G1	G1	G1	G1	H1	H1	H1	H2	H2	H2	H2	H2	H2	I2	I2	I2	I2	I2	K1	K1	K1	K1	K1
27	F1	F1	F1	F1	F1	F1	F1	F5	G1	G1	G1	G1	G1	G1	G1	H1	H1	H1	H2	H2	H2	H2	H2	H2	I2	I2	I2	I2	I2	K1	K1	K1	K1	0
28	F1	F1	F1	F1	F1	F1	F1	G1	G1	G1	G1	G1	G1	G1	G1	H1	H1	H1	H2	H2	H2	H2	H2	H2	I2	I2	I2	I2	I2	K1	K1	K1	K1	0
29	F1	F1	F1	F1	F1	F1	F2	G1	G1	G1	G1	G1	G1	G1	G1	H1	H1	H1	H2	H2	H2	H2	H2	H2	I2	I2	I2	I2	I2	K1	K1	K1	K1	0
30	F1	F1	F1	F1	F1	F1	F3	G1	G1	G1	G1	G1	G1	G1	G2	H1	H1	H1	H2	H2	H2	H2	H2	H2	I2	I2	I2	I2	I2	K1	K1	K1	K1	0
31	F1	F1	F1	F1	F1	F1	F3	G1	G1	G1	G1	G1	G1	G1	G2	H1	H1	H1	H2	H2	H2	H2	H2	I1	I2	I2	I2	I2	I2	K1	K1	K1	K1	0
32	F1	F1	F1	F1	F1	F2	F4	G1	G1	G1	G1	G1	G1	G1	G2	H1	H1	H2	H2	H2	H2	H2	H2	I1	I2	I2	I2	I2	I2	K1	K1	K1	K1	0
33	F1	F1	F1	F1	F1	F2	F4	G1	G1	G1	G1	G1	G1	G1	G2	H1	H1	H2	H2	H2	H2	H2	H2	I1	I2	I2	I2	I2	I2	K1	K1	K1	K1	0
34	F1	F1	F1	F1	F1	F3	F5	G1	G1	G1	G1	G1	G1	G1	H1	H1	H1	H2	H2	H2	H2	H2	H2	I1	I2	I2	I2	I2	I2	K1	K1	K1	K1	0
35	F1	F1	F1	F1	F2	F3	G1	G1	G1	G1	G1	G1	G1	G1	H1	H1	H1	H2	H2	H2	H2	H2	H2	I2	I2	I2	I2	I2	I2	K1	K1	K1	K1	0
36	F1	F1	F1	F1	F2	F4	G1	G1	G1	G1	G1	G1	G1	G2	H1	H1	H1	H2	H2	H2	H2	H2	H2	I2	I2	I2	I2	I2	I2	K1	K1	K1	K1	0
37	F1	F1	F1	F2	F3	F4	G1	G1	G1	G1	G1	G1	G1	G2	H1	H1	H1	H2	H2	H2	H2	H2	H2	I2	I2	I2	I2	I2	J1	K1	K1	K1	K1	0
38	F1	F1	F1	F2	F3	F5	G1	G1	G1	G1	G1	G1	G1	G2	H1	H1	H1	H2	H2	H2	H2	H2	H2	I2	I2	I2	I2	I2	J1	K1	K1	K1	K1	0
39	F1	F1	F2	F3	F4	F5	G1	G1	G1	G1	G1	G1	G1	G2	H1	H1	H2	H2	H2	H2	H2	H2	H2	I2	I2	I2	I2	I2	J1	K1	K1	K1	K1	0
40	F1	F2	F2	F3	F4	G1	G1	G1	G1	G1	G1	G1	G2	G2	H1	H1	H2	H2	H2	H2	H2	H2	I1	I2	I2	I2	I2	I2	J1	K1	K1	K1	K1	0
41	F2	F2	F3	F3	F4	G1	G1	G1	G1	G1	G1	G1	G2	H1	H1	H1	H2	H2	H2	H2	H2	H2	I1	I2	I2	I2	I2	I2	K1	K1	K1	K1	K1	0
42	F2	F3	F3	F4	F5	G1	G1	G1	G1	G1	G1	G1	G2	H1	H1	H1	H2	H2	H2	H2	H2	H2	I1	I2	I2	I2	I2	I2	K1	K1	K1	K1	K1	0
43	F3	F3	F3	F4	F5	G1	G1	G1	G1	G1	G1	G2	G2	H1	H1	H1	H2	H2	H2	H2	H2	H2	I1	I2	I2	I2	I2	I2	K1	K1	K1	K1	K1	0
44	F3	F3	F4	F5	G1	G1	G1	G1	G1	G1	G1	G2	G2	H1	H1	H2	H2	H2	H2	H2	H2	H2	I1	I2	I2	I2	I2	I2	K1	K1	K1	K1	K1	0
45	F3	F4	F4	F5	G1	G1	G1	G1	G1	G1	G1	G2	H1	H1	H1	H2	H2	H2	H2	H2	H2	H2	I1	I2	I2	I2	I2	I2	K1	K1	K1	K1	K1	0
46	F4	F4	F5	G1	G1	G1	G1	G1	G1	G1	G2	G2	H1	H1	H1	H2	H2	H2	H2	H2	H2	H2	I1	I2	I2	I2	I2	I2	K1	K1	K1	K1	K1	0
47	F4	F5	F5	G1	G1	G1	G1	G1	G1	G1	G2	G2	H1	H1	H1	H2	H2	H2	H2	H2	H2	I1	I2	I2	I2	I2	I2	I2	K1	K1	K1	K1	K1	0
48	F5	F5	G1	G1	G1	G1	G1	G1	G1	G2	G2	G2	H1	H1	H2	H2	H2	H2	H2	H2	H2	I1	I2	I2	I2	I2	I2	I2	K1	K1	K1	K1	K1	0
49	F5	G1	G1	G1	G1	G1	G1	G1	G2	G2	G2	H1	H1	H1	H2	H2	H2	H2	H2	H2	H2	I1	I2	I2	I2	I2	I2	J1	K1	K1	K1	K1	0	0
50	F5	G1	G1	G1	G1	G1	G1	G1	G2	G2	G2	H1	H1	H1	H2	H2	H2	H2	H2	H2	H2	I1	I2	I2	I2	I2	I2	J1	K1	K1	K1	K1	0	0
51	G1	G1	G1	G1	G1	G1	G1	G2	G2	G2	H1	H1	H1	H2	H2	H2	H2	H2	H2	H2	I1	I1	I2	I2	I2	I2	I2	J1	K1	K1	K1	K1	0	0
52	G1	G1	G1	G1	G1	G1	G2	G2	G2	G2	H1	H1	H1	H2	H2	H2	H2	H2	H2	H2	I1	I1	I2	I2	I2	I2	I2	J1	K1	K1	K1	K1	0	0

SECTION 4.0 SOLID COVER PANEL SPANS FOR COMMERCIAL AND PATIO STRUCTURES

2.5" x6" Super Six (Single Span) DetaiL N3, A

Ground Snow Load (psf)	Panel Gauge (in)	Wind Speed and Exposure: Exposure B 110	Exposure B 115	Exposure B 130	Exposure C 110	Exposure C 115	Exposure C 120	Exposure C 130
10 LIVE	0.018	12'-1"	11'-9"	10'-8"	10'-8"	8'-4"	7'-11"	7'-4"
	0.024	15'-5"	15'-0"	13'-4"	13'-4"	12'-9"	12'-2"	11'-3"
	0.032	17'-0"	16'-8"	15'-10"	15'-10"	15'-7"	15'-4"	14'-3"
	0.036	17'-8"	17'-4"	16'-5"	16'-5"	16'-2"	16'-0"	15'-4"
20 LIVE	0.018	9'-3"	9'-1"	8'-6"	8'-6"	8'-3"	7'-11"	7'-4"
	0.024	12'-9"	12'-6"	12'-0"	12'-0"	11'-10"	11'-5"	11'-1"
	0.032	14'-11"	14'-9"	14'-5"	14'-5"	14'-3"	13'-11"	13'-8"
	0.036	15'-6"	15'-4"	14'-11"	14'-11"	14'-9"	14'-5"	14'-2"
25	0.018	9'-3"	8'-11"	8'-5"	8'-5"	8'-2"	7'-11"	7'-4"
	0.024	12'-9"	12'-6"	11'-10"	11'-10"	11'-7"	11'-5"	10'-11"
	0.032	14'-11"	14'-9"	14'-3"	14'-3"	14'-1"	13'-11"	13'-6"
	0.036	15'-6"	15'-4"	14'-9"	14'-9"	14'-7"	14'-5"	14'-0"
30	0.018	8'-8"	8'-6"	8'-0"	8'-0"	7'-10"	7'-8"	7'-4"
	0.024	11'-10"	11'-7"	11'-3"	11'-3"	11'-1"	10'-11"	10'-5"
	0.032	14'-3"	14'-1"	13'-9"	13'-9"	13'-8"	13'-6"	13'-0"
	0.036	14'-9"	14'-7"	14'-4"	14'-4"	14'-2"	14'-0"	13'-8"
36	0.018	8'-2"	8'-0"	7'-8"	7'-8"	7'-7"	7'-4"	7'-1"
	0.024	11'-3"	11'-1"	10'-7"	10'-7"	10'-5"	9'-5"	9'-1"
	0.032	13'-9"	13'-8"	13'-2"	13'-2"	13'-0"	12'-10"	12'-4"
	0.036	14'-4"	14'-2"	13'-9"	13'-9"	13'-8"	13'-6"	13'-2"
42	0.018	7'-9"	7'-8"	7'-4"	7'-4"	7'-3"	7'-1"	6'-9"
	0.024	10'-5"	10'-5"	9'-4"	9'-4"	9'-3"	9'-1"	8'-8"
	0.032	13'-0"	13'-0"	12'-6"	12'-6"	12'-4"	12'-2"	11'-9"
	0.036	13'-8"	13'-8"	13'-3"	13'-3"	13'-2"	13'-0"	12'-7"
50	0.018	7'-4"	7'-3"	6'-11"	6'-11"	6'-10"	6'-9"	6'-6"
	0.024	9'-4"	9'-3"	8'-10"	8'-10"	8'-9"	8'-7"	8'-4"
	0.032	11'-11"	11'-11"	11'-9"	11'-9"	11'-8"	11'-6"	11'-2"
	0.036	12'-8"	12'-8"	12'-7"	12'-7"	12'-5"	12'-3"	11'-11"
60	0.018	6'-10"	6'-9"	6'-6"	6'-6"	6'-5"	6'-4"	6'-2"
	0.024	8'-9"	8'-8"	8'-5"	8'-5"	8'-3"	8'-2"	7'-11"
	0.032	10'-11"	10'-11"	10'-11"	10'-11"	10'-11"	10'-10"	10'-7"
	0.036	11'-8"	11'-8"	11'-8"	11'-8"	11'-8"	11'-7"	11'-3"

TABLE 4.4

3.5"x12" Super 12 (Single Span) Detail D

Ground Snow Load (psf)	Panel Gauge (in)	Wind Speed and Exposure: Exposure B 110	Exposure B 115	Exposure B 130	Exposure C 110	Exposure C 115	Exposure C 120	Exposure C 130
10 LIVE	0.018	12'-5"	12'-0"	11'-1"	11'-1"	10'-10"	10'-7"	7'-3"
	0.024	14'-2"	13'-9"	12'-9"	12'-9"	12'-5"	12'-2"	11'-5"
	0.032	16'-7"	16'-2"	14'-11"	14'-11"	14'-7"	14'-3"	13'-5"
	0.036	17'-9"	17'-3"	16'-0"	16'-0"	15'-7"	15'-3"	14'-4"
20 LIVE	0.018	8'-7"	8'-3"	7'-3"	7'-3"	6'-10"	6'-6"	6'-0"
	0.024	11'-8"	11'-5"	11'-0"	11'-0"	10'-9"	10'-5"	9'-0"
	0.032	13'-8"	13'-5"	12'-11"	12'-11"	12'-8"	12'-3"	11'-10"
	0.036	14'-7"	14'-4"	13'-10"	13'-10"	13'-7"	13'-1"	12'-8"
25	0.018	8'-3"	8'-0"	7'-1"	7'-1"	6'-8"	6'-6"	5'-10"
	0.024	11'-5"	11'-5"	10'-9"	10'-9"	10'-7"	10'-5"	8'-11"
	0.032	13'-5"	13'-5"	12'-8"	12'-8"	12'-5"	12'-3"	11'-8"
	0.036	14'-4"	14'-4"	13'-7"	13'-7"	13'-4"	13'-1"	12'-6"
30	0.018	7'-6"	7'-3"	6'-6"	6'-6"	6'-2"	5'-10"	5'-5"
	0.024	10'-9"	10'-7"	9'-5"	9'-5"	9'-2"	8'-11"	8'-7"
	0.032	12'-8"	12'-5"	12'-1"	12'-1"	11'-10"	11'-8"	11'-2"
	0.036	13'-7"	13'-4"	12'-11"	12'-11"	12'-8"	12'-6"	12'-0"
36	0.018	6'-8"	6'-6"	5'-10"	5'-10"	5'-9"	5'-5"	4'-3"
	0.024	9'-6"	9'-5"	8'-11"	8'-11"	8'-10"	8'-7"	8'-1"
	0.032	12'-1"	11'-10"	11'-4"	11'-4"	11'-2"	11'-1"	10'-8"
	0.036	12'-11"	12'-8"	12'-2"	12'-2"	12'-0"	11'-10"	11'-5"
42	0.018	6'-0"	5'-10"	5'-4"	5'-4"	5'-3"	4'-4"	4'-0"
	0.024	9'-0"	8'-11"	8'-6"	8'-6"	8'-5"	8'-1"	7'-5"
	0.032	11'-2"	11'-2"	10'-9"	10'-9"	10'-8"	10'-6"	9'-4"
	0.036	12'-0"	12'-0"	11'-6"	11'-6"	11'-5"	11'-3"	10'-10"
50	0.018	5'-4"	5'-3"	4'-3"	4'-3"	4'-2"	4'-0"	3'-8"
	0.024	8'-6"	8'-5"	7'-9"	7'-9"	7'-7"	7'-4"	6'-10"
	0.032	10'-3"	10'-3"	9'-6"	9'-6"	9'-5"	9'-3"	8'-11"
	0.036	11'-0"	11'-0"	10'-10"	10'-10"	10'-9"	10'-8"	9'-7"
60	0.018	4'-4"	4'-2"	3'-10"	3'-10"	3'-9"	3'-8"	3'-4"
	0.024	7'-7"	7'-5"	6'-11"	6'-11"	6'-8"	6'-7"	6'-2"
	0.032	9'-5"	9'-4"	9'-0"	9'-0"	8'-10"	8'-9"	8'-6"
	0.036	10'-1"	10'-1"	9'-8"	9'-8"	9'-6"	9'-5"	9'-1"

TABLE 4.5

2.5" x 12" Mark X (Single Span) Detail B

Ground Snow Load (psf)	Panel Gauge (in)	Wind Speed and Exposure: Exposure B 110	Exposure B 115	Exposure B 130	Exposure C 110	Exposure C 115	Exposure C 120	Exposure C 130
10 LIVE	0.018	8'-2"	7'-10"	6'-11"	6'-11"	6'-7"	6'-4"	5'-10"
	0.024	12'-2"	11'-11"	11'-1"	11'-1"	10'-8"	8'-4"	7'-8"
	0.032	13'-4"	13'-1"	12'-5"	12'-5"	12'-3"	12'-0"	11'-6"
	0.036	13'-10"	13'-7"	12'-11"	12'-11"	12'-8"	12'-6"	12'-0"
20 LIVE	0.018	7'-2"	7'-1"	6'-7"	6'-7"	6'-5"	6'-3"	5'-10"
	0.024	9'-4"	9'-3"	8'-8"	8'-8"	8'-5"	8'-2"	7'-8"
	0.032	11'-8"	11'-6"	11'-3"	11'-3"	11'-1"	10'-10"	10'-8"
	0.036	12'-2"	12'-0"	11'-8"	11'-8"	11'-7"	11'-4"	11'-1"
25	0.018	7'-1"	6'-11"	6'-6"	6'-6"	6'-4"	6'-3"	5'-10"
	0.024	9'-3"	9'-1"	8'-6"	8'-6"	8'-3"	8'-2"	7'-8"
	0.032	11'-6"	11'-6"	11'-1"	11'-1"	11'-0"	10'-10"	10'-6"
	0.036	12'-0"	12'-0"	11'-7"	11'-7"	11'-5"	11'-4"	10'-11"
30	0.018	6'-9"	6'-7"	6'-3"	6'-3"	6'-1"	5'-11"	5'-9"
	0.024	8'-9"	8'-8"	8'-2"	8'-2"	8'-0"	7'-9"	7'-6"
	0.032	11'-1"	11'-0"	10'-9"	10'-9"	10'-8"	10'-6"	9'-3"
	0.036	11'-7"	11'-5"	11'-2"	11'-2"	11'-1"	10'-11"	10'-8"
36	0.018	6'-4"	6'-3"	5'-11"	5'-11"	5'-10"	5'-9"	5'-6"
	0.024	8'-3"	8'-2"	7'-9"	7'-9"	7'-8"	7'-6"	7'-2"
	0.032	10'-9"	10'-8"	9'-7"	9'-7"	9'-6"	9'-3"	8'-11"
	0.036	11'-2"	11'-1"	10'-9"	10'-9"	10'-8"	10'-7"	9'-8"
42	0.018	6'-0"	5'-11"	5'-8"	5'-8"	5'-7"	5'-6"	5'-3"
	0.024	7'-10"	7'-9"	7'-5"	7'-5"	7'-4"	7'-2"	6'-11"
	0.032	9'-9"	9'-7"	9'-2"	9'-2"	9'-1"	8'-11"	8'-7"
	0.036	10'-8"	10'-8"	10'-4"	10'-4"	9'-10"	9'-8"	9'-3"
50	0.018	5'-8"	5'-7"	5'-4"	5'-4"	5'-4"	5'-3"	4'-9"
	0.024	7'-5"	7'-4"	7'-0"	7'-0"	7'-0"	6'-10"	6'-7"
	0.032	9'-2"	9'-1"	8'-9"	8'-9"	8'-8"	8'-6"	8'-2"
	0.036	9'-11"	9'-10"	9'-5"	9'-5"	9'-4"	9'-2"	8'-10"
60	0.018	5'-4"	5'-3"	4'-10"	4'-10"	4'-9"	4'-8"	4'-6"
	0.024	7'-0"	6'-11"	6'-8"	6'-8"	6'-6"	6'-6"	6'-3"
	0.032	8'-8"	8'-7"	8'-3"	8'-3"	8'-1"	8'-0"	7'-9"
	0.036	9'-4"	9'-3"	8'-11"	8'-11"	8'-9"	8'-8"	8'-5"

TABLE 4.6

2"x6" Flat Panel (Single Span) Detail N2, C

Ground Snow Load (psf)	Panel Gauge (in)	Wind Speed and Exposure: Exposure B 110	Exposure B 115	Exposure B 130	Exposure C 110	Exposure C 115	Exposure C 120	Exposure C 130
10 LIVE	0.018	10'-8"	10'-4"	8'-5"	8'-5"	8'-3"	8'-0"	7'-6"
	0.024	12'-11"	12'-8"	12'-1"	12'-1"	11'-10"	11'-8"	11'-0"
	0.032	14'-2"	13'-11"	13'-3"	13'-3"	13'-0"	12'-10"	12'-4"
	0.040	15'-3"	14'-11"	14'-2"	14'-2"	14'-0"	13'-9"	13'-3"
20 LIVE	0.018	8'-1"	8'-0"	7'-6"	7'-6"	7'-3"	7'-1"	6'-10"
	0.024	11'-3"	11'-0"	10'-7"	10'-7"	10'-5"	9'-1"	8'-9"
	0.032	12'-6"	12'-4"	12'-0"	12'-0"	11'-10"	11'-7"	11'-4"
	0.040	13'-5"	13'-3"	12'-11"	12'-11"	12'-9"	12'-6"	12'-3"
25	0.018	8'-0"	7'-10"	7'-5"	7'-5"	7'-2"	7'-1"	6'-9"
	0.024	11'-0"	11'-0"	10'-5"	10'-5"	9'-2"	9'-1"	8'-7"
	0.032	12'-4"	12'-4"	11'-10"	11'-10"	11'-9"	11'-7"	11'-3"
	0.040	13'-3"	13'-3"	12'-9"	12'-9"	12'-7"	12'-6"	12'-1"
30	0.018	7'-7"	7'-6"	7'-1"	7'-1"	6'-11"	6'-9"	6'-6"
	0.024	10'-5"	9'-7"	9'-1"	9'-1"	8'-10"	8'-7"	8'-4"
	0.032	11'-10"	11'-9"	11'-6"	11'-6"	11'-4"	11'-3"	10'-11"
	0.040	12'-9"	12'-7"	12'-4"	12'-4"	12'-3"	12'-1"	11'-9"
36	0.018	7'-2"	7'-1"	6'-9"	6'-9"	6'-8"	6'-6"	6'-3"
	0.024	9'-2"	9'-1"	8'-7"	8'-7"	8'-6"	8'-4"	8'-0"
	0.032	11'-6"	11'-4"	11'-0"	11'-0"	10'-11"	10'-10"	10'-7"
	0.040	12'-4"	12'-3"	11'-10"	11'-10"	11'-9"	11'-8"	11'-4"
42	0.018	6'-10"	6'-9"	6'-5"	6'-5"	6'-4"	6'-3"	6'-0"
	0.024	8'-9"	8'-7"	8'-3"	8'-3"	8'-2"	8'-0"	7'-8"
	0.032	10'-11"	10'-11"	10'-8"	10'-8"	10'-7"	10'-6"	9'-6"
	0.040	11'-9"	11'-9"	11'-6"	11'-6"	11'-4"	11'-3"	11'-0"
50	0.018	6'-5"	6'-4"	6'-1"	6'-1"	6'-0"	5'-11"	5'-9"
	0.024	8'-3"	8'-2"	7'-10"	7'-10"	7'-9"	7'-7"	7'-4"
	0.032	10'-4"	10'-4"	9'-8"	9'-8"	9'-7"	9'-5"	9'-1"
	0.040	11'-1"	11'-1"	11'-0"	11'-0"	10'-11"	10'-10"	10'-8"
60	0.018	6'-0"	6'-0"	5'-9"	5'-9"	5'-8"	5'-7"	5'-5"
	0.024	7'-9"	7'-8"	7'-5"	7'-5"	7'-3"	7'-2"	7'-0"
	0.032	9'-7"	9'-6"	9'-2"	9'-2"	9'-0"	8'-11"	8'-8"
	0.040	10'-6"	10'-6"	10'-6"	10'-6"	10'-6"	10'-5"	9'-8"

TABLE 4.7

Amerimax Exterior Home Products
28921 US Hwy 74
Romoland, CA 92585

Carl Putnam, P. E.
3441 Ivylink Place
Lynchburg, VA 24503
(434) 384-2514
carlputnam@comcast.net

NOTE: PANELS MAY OVERHANG 25% OF THEIR CLEARSPAN

2.5" x6" Super Six (Multispan) Detail N3, A

Ground Snow Load (psf)	Panel Gauge (in)	Wind Speed and Exposure: Exposure B 110	Exposure B 115	Exposure B 130	Exposure C 110	Exposure C 115	Exposure C 120	Exposure C 130
10 LIVE	0.018	10'-2"	9'-10"	9'-1"	9'-1"	8'-10"	8'-8"	8'-1"
	0.024	12'-7"	12'-3"	11'-4"	11'-4"	11'-0"	10'-9"	10'-1"
	0.032	15'-10"	15'-5"	14'-3"	14'-3"	13'-11"	13'-7"	12'-9"
	0.036	17'-4"	16'-11"	15'-8"	15'-8"	15'-3"	14'-11"	14'-0"
20 LIVE	0.018	8'-3"	8'-1"	7'-10"	7'-10"	7'-8"	7'-5"	7'-2"
	0.024	10'-4"	10'-1"	9'-9"	9'-9"	9'-7"	9'-3"	8'-11"
	0.032	13'-1"	12'-9"	12'-4"	12'-4"	12'-1"	11'-8"	11'-4"
	0.036	14'-4"	14'-0"	13'-6"	13'-6"	13'-3"	12'-10"	12'-5"
25	0.018	8'-1"	8'-1"	7'-8"	7'-8"	7'-6"	7'-5"	7'-0"
	0.024	10'-1"	10'-1"	9'-7"	9'-7"	9'-5"	9'-3"	8'-10"
	0.032	12'-9"	12'-9"	12'-1"	12'-1"	11'-11"	11'-8"	11'-2"
	0.036	14'-0"	14'-0"	13'-3"	13'-3"	13'-1"	12'-10"	12'-3"
30	0.018	7'-8"	7'-6"	7'-3"	7'-3"	7'-2"	7'-0"	6'-9"
	0.024	9'-7"	9'-5"	9'-1"	9'-1"	8'-11"	8'-10"	8'-5"
	0.032	12'-1"	11'-11"	11'-6"	11'-6"	11'-4"	11'-2"	10'-8"
	0.036	13'-3"	13'-1"	12'-8"	12'-8"	12'-5"	12'-3"	11'-9"
36	0.018	7'-3"	7'-2"	6'-10"	6'-10"	6'-9"	6'-8"	6'-4"
	0.024	9'-1"	8'-11"	8'-7"	8'-7"	8'-5"	8'-4"	8'-0"
	0.032	11'-6"	11'-4"	10'-10"	10'-10"	10'-8"	10'-7"	10'-2"
	0.036	12'-8"	12'-5"	11'-11"	11'-11"	11'-9"	11'-7"	11'-2"
42	0.018	6'-9"	6'-9"	6'-6"	6'-6"	6'-4"	6'-4"	6'-1"
	0.024	8'-5"	8'-5"	8'-1"	8'-1"	8'-0"	7'-11"	7'-7"
	0.032	10'-8"	10'-8"	10'-3"	10'-3"	10'-2"	10'-0"	9'-8"
	0.036	11'-9"	11'-9"	11'-4"	11'-4"	11'-2"	11'-0"	10'-8"
50	0.018	6'-2"	6'-2"	6'-1"	6'-1"	6'-0"	5'-11"	5'-9"
	0.024	7'-8"	7'-8"	7'-7"	7'-7"	7'-6"	7'-5"	7'-2"
	0.032	9'-9"	9'-9"	9'-8"	9'-8"	9'-7"	9'-5"	9'-2"
	0.036	10'-9"	10'-9"	10'-8"	10'-8"	10'-6"	10'-5"	10'-1"
60	0.018	5'-7"	5'-7"	5'-7"	5'-7"	5'-7"	5'-7"	5'-5"
	0.024	7'-1"	7'-1"	7'-1"	7'-1"	7'-1"	7'-0"	6'-9"
	0.032	9'-0"	9'-0"	9'-0"	9'-0"	9'-0"	8'-11"	8'-8"
	0.036	9'-11"	9'-11"	9'-11"	9'-11"	9'-11"	9'-9"	9'-6"

TABLE 4.8

3.5"x12" Super 12 (Multispan) Detail D

Ground Snow Load (psf)	Panel Gauge (in)	Wind Speed and Exposure: Exposure B 110	Exposure B 115	Exposure B 130	Exposure C 110	Exposure C 115	Exposure C 120	Exposure C 130
10 LIVE	0.018	7'-11"	7'-7"	6'-7"	6'-7"	6'-4"	6'-1"	5'-6"
	0.024	10'-11"	10'-6"	9'-4"	9'-4"	9'-0"	8'-9"	7'-11"
	0.032	15'-0"	14'-6"	13'-1"	13'-1"	12'-8"	12'-4"	11'-4"
	0.036	16'-10"	16'-3"	14'-9"	14'-9"	14'-4"	13'-11"	12'-10"
20 LIVE	0.018	5'-8"	5'-6"	4'-4"	4'-4"	4'-1"	3'-11"	3'-8"
	0.024	8'-2"	7'-11"	7'-6"	7'-6"	7'-3"	6'-10"	6'-6"
	0.032	11'-8"	11'-4"	10'-9"	10'-9"	10'-6"	10'-0"	9'-7"
	0.036	13'-2"	12'-10"	12'-3"	12'-3"	11'-11"	11'-5"	11'-0"
25	0.018	5'-6"	5'-6"	4'-2"	4'-2"	4'-0"	3'-11"	3'-7"
	0.024	7'-11"	7'-11"	7'-3"	7'-3"	7'-1"	6'-10"	6'-4"
	0.032	11'-4"	11'-4"	10'-6"	10'-6"	10'-3"	10'-0"	9'-4"
	0.036	12'-10"	12'-10"	11'-11"	11'-11"	11'-8"	11'-5"	10'-9"
30	0.018	4'-5"	4'-4"	3'-11"	3'-11"	3'-9"	3'-7"	3'-4"
	0.024	7'-3"	7'-1"	6'-8"	6'-8"	6'-6"	6'-4"	5'-11"
	0.032	10'-6"	10'-3"	9'-9"	9'-9"	9'-7"	9'-4"	8'-10"
	0.036	11'-11"	11'-8"	11'-2"	11'-2"	11'-0"	10'-9"	10'-2"
36	0.018	4'-0"	3'-11"	3'-7"	3'-7"	3'-6"	3'-4"	3'-1"
	0.024	6'-8"	6'-6"	6'-1"	6'-1"	5'-11"	5'-10"	5'-5"
	0.032	9'-9"	9'-7"	9'-0"	9'-0"	8'-10"	8'-8"	8'-2"
	0.036	11'-2"	11'-0"	10'-4"	10'-4"	10'-2"	9'-11"	9'-5"
42	0.018	3'-8"	3'-7"	3'-3"	3'-3"	3'-2"	3'-1"	2'-10"
	0.024	5'-11"	5'-11"	5'-7"	5'-7"	5'-5"	5'-4"	4'-4"
	0.032	8'-10"	8'-10"	8'-4"	8'-4"	8'-2"	8'-0"	7'-7"
	0.036	10'-2"	10'-2"	9'-7"	9'-7"	9'-5"	9'-3"	8'-10"
50	0.018	3'-3"	3'-2"	2'-11"	2'-11"	2'-11"	2'-9"	2'-7"
	0.024	5'-1"	5'-1"	4'-6"	4'-6"	4'-5"	4'-3"	4'-0"
	0.032	7'-9"	7'-9"	7'-7"	7'-7"	7'-6"	7'-4"	7'-0"
	0.036	9'-0"	9'-0"	8'-10"	8'-10"	8'-8"	8'-7"	8'-2"
60	0.018	2'-11"	2'-10"	2'-8"	2'-8"	2'-7"	2'-3"	2'-1"
	0.024	4'-5"	4'-4"	4'-1"	4'-1"	3'-11"	3'-11"	3'-8"
	0.032	6'-10"	6'-10"	6'-10"	6'-10"	6'-10"	6'-8"	6'-5"
	0.036	7'-11"	7'-11"	7'-11"	7'-11"	7'-11"	7'-10"	7'-6"

TABLE 4.9

2.5" x 12" Mark X (Multispan) Detail B

Ground Snow Load (psf)	Panel Gauge (in)	Wind Speed and Exposure: Exposure B 110	Exposure B 115	Exposure B 130	Exposure C 110	Exposure C 115	Exposure C 120	Exposure C 130
10 LIVE	0.018	8'-0"	7'-9"	7'-1"	7'-1"	6'-11"	6'-9"	6'-4"
	0.024	10'-7"	10'-3"	9'-5"	9'-5"	9'-2"	9'-0"	8'-5"
	0.032	13'-2"	12'-9"	11'-9"	11'-9"	11'-6"	11'-3"	10'-6"
	0.036	13'-10"	13'-7"	12'-9"	12'-9"	12'-6"	12'-2"	11'-5"
20 LIVE	0.018	6'-5"	6'-4"	6'-1"	6'-1"	5'-11"	5'-9"	5'-6"
	0.024	8'-7"	8'-5"	8'-1"	8'-1"	7'-11"	7'-8"	7'-5"
	0.032	10'-9"	10'-6"	10'-2"	10'-2"	9'-11"	9'-7"	9'-4"
	0.036	11'-8"	11'-5"	11'-0"	11'-0"	10'-10"	10'-5"	10'-1"
25	0.018	6'-4"	6'-4"	5'-11"	5'-11"	5'-10"	5'-9"	5'-5"
	0.024	8'-5"	8'-5"	7'-11"	7'-11"	7'-9"	7'-8"	7'-3"
	0.032	10'-6"	10'-6"	9'-11"	9'-11"	9'-9"	9'-7"	9'-2"
	0.036	11'-5"	11'-5"	10'-10"	10'-10"	10'-7"	10'-5"	9'-11"
30	0.018	5'-11"	5'-10"	5'-8"	5'-8"	5'-6"	5'-5"	5'-2"
	0.024	7'-11"	7'-9"	7'-6"	7'-6"	7'-5"	7'-3"	6'-11"
	0.032	9'-11"	9'-9"	9'-5"	9'-5"	9'-4"	9'-2"	8'-9"
	0.036	10'-10"	10'-7"	10'-3"	10'-3"	10'-1"	9'-11"	9'-6"
36	0.018	5'-8"	5'-6"	5'-3"	5'-3"	5'-2"	4'-7"	4'-5"
	0.024	7'-6"	7'-5"	7'-1"	7'-1"	6'-11"	6'-10"	6'-7"
	0.032	9'-5"	9'-4"	8'-11"	8'-11"	8'-9"	8'-8"	8'-4"
	0.036	10'-3"	10'-1"	9'-8"	9'-8"	9'-6"	9'-5"	9'-0"
42	0.018	5'-2"	5'-2"	4'-7"	4'-7"	4'-6"	4'-5"	4'-2"
	0.024	6'-11"	6'-11"	6'-8"	6'-8"	6'-7"	6'-6"	6'-3"
	0.032	8'-9"	8'-9"	8'-5"	8'-5"	8'-4"	8'-2"	7'-11"
	0.036	9'-6"	9'-6"	9'-2"	9'-2"	9'-0"	8'-11"	8'-7"
50	0.018	4'-7"	4'-6"	4'-3"	4'-3"	4'-3"	4'-2"	4'-0"
	0.024	6'-4"	6'-4"	6'-3"	6'-3"	6'-2"	6'-1"	5'-11"
	0.032	8'-0"	8'-0"	7'-11"	7'-11"	7'-10"	7'-9"	7'-6"
	0.036	8'-8"	8'-8"	8'-7"	8'-7"	8'-6"	8'-5"	8'-2"
60	0.018	4'-3"	4'-2"	4'-0"	4'-0"	3'-11"	3'-11"	3'-9"
	0.024	5'-9"	5'-9"	5'-9"	5'-9"	5'-9"	5'-9"	5'-7"
	0.032	7'-4"	7'-4"	7'-4"	7'-4"	7'-4"	7'-3"	7'-0"
	0.036	8'-0"	8'-0"	8'-0"	8'-0"	8'-0"	7'-11"	7'-8"

TABLE 4.10

2"x6" Flat Panel (Multispan) Detail N2, C

Ground Snow Load (psf)	Panel Gauge (in)	Wind Speed and Exposure: Exposure B 110	Exposure B 115	Exposure B 130	Exposure C 110	Exposure C 115	Exposure C 120	Exposure C 130
10 LIVE	0.018	10'-8"	10'-4"	9'-7"	9'-7"	9'-4"	9'-2"	8'-7"
	0.024	12'-11"	12'-8"	12'-1"	12'-1"	11'-10"	11'-8"	11'-0"
	0.032	14'-2"	13'-11"	13'-3"	13'-3"	13'-0"	12'-10"	12'-4"
	0.040	15'-3"	14'-11"	14'-2"	14'-2"	14'-0"	13'-9"	13'-3"
20 LIVE	0.018	8'-9"	8'-7"	8'-3"	8'-3"	8'-1"	7'-10"	7'-7"
	0.024	11'-3"	11'-0"	10'-7"	10'-7"	10'-5"	10'-1"	9'-9"
	0.032	12'-6"	12'-4"	12'-0"	12'-0"	11'-10"	11'-7"	11'-4"
	0.040	13'-5"	13'-3"	12'-11"	12'-11"	12'-9"	12'-6"	12'-3"
25	0.018	8'-7"	8'-7"	8'-1"	8'-1"	8'-0"	7'-10"	7'-6"
	0.024	11'-0"	11'-0"	10'-5"	10'-5"	10'-3"	10'-1"	9'-7"
	0.032	12'-4"	12'-4"	11'-10"	11'-10"	11'-9"	11'-7"	11'-3"
	0.040	13'-3"	13'-3"	12'-9"	12'-9"	12'-7"	12'-6"	12'-1"
30	0.018	8'-1"	8'-0"	7'-9"	7'-9"	7'-7"	7'-6"	7'-2"
	0.024	10'-5"	10'-3"	9'-11"	9'-11"	9'-9"	9'-7"	9'-2"
	0.032	11'-10"	11'-9"	11'-6"	11'-6"	11'-4"	11'-3"	10'-11"
	0.040	12'-9"	12'-7"	12'-4"	12'-4"	12'-3"	12'-1"	11'-9"
36	0.018	7'-9"	7'-7"	7'-3"	7'-3"	7'-2"	7'-1"	6'-10"
	0.024	9'-11"	9'-9"	9'-4"	9'-4"	9'-2"	9'-1"	8'-9"
	0.032	11'-6"	11'-4"	11'-0"	11'-0"	10'-11"	10'-10"	10'-7"
	0.040	12'-4"	12'-3"	11'-10"	11'-10"	11'-9"	11'-8"	11'-4"
42	0.018	7'-2"	7'-2"	6'-11"	6'-11"	6'-10"	6'-9"	6'-6"
	0.024	9'-2"	9'-2"	8'-10"	8'-10"	8'-9"	8'-7"	8'-4"
	0.032	10'-11"	10'-11"	10'-8"	10'-8"	10'-7"	10'-6"	10'-3"
	0.040	11'-9"	11'-9"	11'-6"	11'-6"	11'-4"	11'-3"	11'-0"
50	0.018	6'-7"	6'-7"	6'-6"	6'-6"	6'-5"	6'-4"	6'-2"
	0.024	8'-5"	8'-5"	8'-4"	8'-4"	8'-3"	8'-2"	7'-11"
	0.032	10'-4"	10'-4"	10'-3"	10'-3"	10'-2"	10'-1"	9'-9"
	0.040	11'-1"	11'-1"	11'-0"	11'-0"	10'-11"	10'-10"	10'-8"
60	0.018	6'-0"	6'-0"	6'-0"	6'-0"	6'-0"	6'-0"	5'-10"
	0.024	7'-9"	7'-9"	7'-9"	7'-9"	7'-9"	7'-8"	7'-5"
	0.032	9'-7"	9'-7"	9'-7"	9'-7"	9'-7"	9'-6"	9'-3"
	0.040	10'-6"	10'-6"	10'-6"	10'-6"	10'-6"	10'-5"	10'-3"

TABLE 4.11

PROFESSIONAL ENGINEER
CARL PUTNAM
C 68139
EXP. 6/30/2019
CIVIL
STATE OF CALIFORNIA

May 27 2017

SECTION 4.0 SOLID COVER PANEL SPANS FOR COMMERCIAL AND PATIO STRUCTURES

Amerimax Exterior Home Products
28921 US Hwy 74
Romoland, CA 92585

Carl Putnam, P. E.
3441 Ivylink Place
Lynchburg, VA 24503
(434) 384-2514
carlputnam@comcast.net

2.5" x6" Super Six (Single Span) DetaiL N3, A

Ground Snow Load (psf)	Panel Gauge (in)	Wind Speed and Exposure: Exposure B 140	150	160	Exposure C 130	140	150	160
10	0.018	8'-1"	7'-6"	7'-0"	7'-4"	6'-9"	6'-4"	5'-11"
LIVE	0.024	12'-4"	11'-6"	10'-9"	11'-3"	10'-5"	7'-11"	7'-5"
	0.032	15'-4"	14'-8"	13'-8"	14'-3"	13'-2"	12'-4"	11'-6"
	0.036	16'-0"	15'-6"	15'-1"	15'-4"	14'-6"	13'-6"	12'-8"
20	0.018	8'-1"	7'-6"	7'-0"	7'-4"	6'-9"	6'-4"	5'-11"
LIVE	0.024	11'-7"	11'-3"	10'-9"	11'-1"	10'-5"	7'-11"	7'-5"
	0.032	14'-1"	13'-9"	13'-6"	13'-8"	13'-2"	12'-4"	11'-6"
	0.036	14'-7"	14'-4"	14'-0"	14'-2"	13'-9"	13'-5"	12'-8"
25	0.018	8'-0"	7'-6"	7'-0"	7'-4"	6'-9"	6'-4"	5'-11"
	0.024	11'-5"	11'-1"	10'-9"	10'-11"	10'-5"	7'-11"	7'-5"
	0.032	13'-11"	13'-8"	13'-4"	13'-6"	13'-2"	12'-4"	11'-6"
	0.036	14'-5"	14'-2"	13'-11"	14'-0"	13'-9"	13'-5"	12'-8"
30	0.018	7'-9"	7'-6"	7'-0"	7'-4"	6'-9"	6'-4"	5'-11"
	0.024	10'-11"	10'-7"	9'-3"	10'-5"	9'-1"	7'-11"	7'-5"
	0.032	13'-6"	13'-2"	12'-10"	13'-0"	12'-6"	12'-2"	11'-6"
	0.036	14'-0"	13'-9"	13'-6"	13'-8"	13'-3"	13'-0"	12'-7"
36	0.018	7'-4"	7'-2"	6'-11"	7'-1"	6'-9"	6'-4"	5'-11"
	0.024	9'-5"	9'-2"	8'-10"	9'-1"	8'-8"	7'-11"	7'-5"
	0.032	12'-10"	12'-6"	12'-2"	12'-4"	12'-1"	11'-8"	11'-3"
	0.036	13'-6"	13'-3"	13'-0"	13'-2"	12'-10"	12'-5"	12'-0"
42	0.018	7'-1"	6'-10"	6'-8"	6'-9"	6'-6"	6'-4"	5'-11"
	0.024	9'-1"	8'-9"	8'-6"	8'-8"	8'-5"	7'-11"	7'-5"
	0.032	12'-2"	11'-11"	11'-8"	11'-9"	11'-6"	11'-2"	10'-10"
	0.036	13'-0"	12'-8"	12'-5"	12'-7"	12'-3"	11'-11"	11'-7"
50	0.018	6'-9"	6'-6"	6'-4"	6'-6"	6'-3"	6'-1"	5'-10"
	0.024	8'-7"	8'-5"	8'-2"	8'-4"	8'-0"	7'-9"	7'-5"
	0.032	11'-6"	11'-3"	11'-1"	11'-2"	10'-11"	10'-8"	10'-4"
	0.036	12'-3"	12'-0"	11'-10"	11'-11"	11'-8"	11'-4"	11'-1"
60	0.018	6'-4"	6'-3"	6'-1"	6'-2"	6'-0"	5'-10"	0'-0"
	0.024	8'-2"	8'-0"	7'-9"	7'-11"	7'-8"	7'-5"	0'-0"
	0.032	10'-10"	10'-8"	10'-6"	10'-7"	10'-4"	9'-4"	0'-0"
	0.036	11'-7"	11'-4"	11'-2"	11'-3"	11'-1"	10'-9"	10'-6"

TABLE 4.12

3.5"x12" Super 12 (Single Span) Detail D

Ground Snow Load (psf)	Panel Gauge (in)	Wind Speed and Exposure: Exposure B 140	150	160	Exposure C 130	140	150	160
10	0.018	10'-7"	7'-6"	6'-10"	7'-3"	6'-6"	5'-10"	5'-3"
LIVE	0.024	12'-2"	11'-8"	11'-2"	11'-5"	11'-0"	10'-5"	8'-2"
	0.032	14'-3"	13'-8"	13'-2"	13'-5"	12'-11"	12'-3"	11'-8"
	0.036	15'-3"	14'-7"	14'-1"	14'-4"	13'-10"	13'-1"	12'-6"
20	0.018	6'-8"	6'-2"	5'-9"	6'-0"	5'-5"	4'-0"	3'-8"
LIVE	0.024	10'-7"	9'-2"	8'-10"	9'-0"	8'-7"	7'-11"	7'-4"
	0.032	12'-5"	12'-1"	11'-8"	11'-10"	11'-4"	10'-11"	10'-6"
	0.036	13'-4"	12'-11"	12'-6"	12'-8"	12'-2"	11'-8"	11'-3"
25	0.018	6'-6"	6'-0"	5'-7"	5'-10"	5'-4"	4'-0"	3'-8"
	0.024	10'-5"	9'-0"	8'-9"	8'-11"	8'-6"	7'-11"	7'-2"
	0.032	12'-3"	11'-10"	11'-6"	11'-8"	11'-4"	10'-11"	10'-6"
	0.036	13'-1"	12'-8"	12'-4"	12'-6"	12'-2"	11'-8"	11'-3"
30	0.018	6'-0"	5'-7"	5'-3"	5'-5"	4'-2"	3'-10"	3'-5"
	0.024	9'-0"	8'-9"	8'-5"	8'-7"	8'-1"	7'-5"	6'-10"
	0.032	11'-8"	11'-4"	11'-1"	11'-2"	10'-9"	10'-6"	8'-11"
	0.036	12'-6"	12'-2"	11'-10"	12'-0"	11'-6"	11'-3"	10'-10"
36	0.018	5'-5"	4'-5"	4'-1"	4'-3"	3'-11"	3'-7"	3'-3"
	0.024	8'-7"	8'-3"	7'-9"	8'-1"	7'-5"	6'-11"	6'-4"
	0.032	11'-1"	10'-9"	10'-6"	10'-8"	10'-5"	9'-0"	8'-8"
	0.036	11'-10"	11'-6"	11'-3"	11'-5"	11'-1"	10'-9"	10'-5"
42	0.018	4'-5"	4'-2"	3'-10"	4'-0"	3'-8"	3'-4"	0'-0"
	0.024	8'-1"	7'-7"	7'-2"	7'-5"	6'-11"	6'-5"	6'-0"
	0.032	10'-6"	9'-5"	9'-2"	9'-4"	9'-0"	8'-8"	8'-4"
	0.036	11'-3"	11'-0"	10'-9"	10'-10"	10'-8"	9'-4"	8'-11"
50	0.018	4'-1"	3'-10"	3'-6"	3'-8"	3'-5"	0'-0"	0'-0"
	0.024	7'-4"	6'-11"	6'-7"	6'-10"	6'-4"	6'-0"	5'-6"
	0.032	9'-3"	9'-0"	8'-9"	8'-11"	8'-8"	8'-4"	8'-1"
	0.036	10'-8"	10'-5"	9'-5"	9'-7"	9'-3"	8'-11"	8'-8"
60	0.018	3'-8"	3'-5"	3'-3"	3'-4"	0'-0"	0'-0"	0'-0"
	0.024	6'-7"	6'-3"	6'-0"	6'-2"	5'-9"	5'-5"	0'-0"
	0.032	8'-9"	8'-7"	8'-4"	8'-6"	8'-3"	8'-0"	0'-0"
	0.036	9'-5"	9'-2"	8'-11"	9'-1"	8'-10"	8'-7"	0'-0"

TABLE 4.13

2.5" x 12" Mark X (Single Span) Detail B

Ground Snow Load (psf)	Panel Gauge (in)	Wind Speed and Exposure: Exposure B 140	150	160	Exposure C 130	140	150	160
10	0.018	6'-5"	6'-0"	5'-7"	5'-10"	5'-5"	3'-7"	3'-4"
LIVE	0.024	10'-4"	7'-10"	7'-4"	7'-8"	7'-1"	6'-7"	6'-2"
	0.032	12'-0"	11'-8"	11'-3"	11'-6"	10'-10"	8'-3"	7'-9"
	0.036	12'-6"	12'-2"	11'-10"	12'-0"	11'-8"	11'-0"	8'-4"
20	0.018	6'-4"	6'-0"	5'-7"	5'-10"	5'-5"	3'-7"	3'-4"
LIVE	0.024	8'-3"	7'-10"	7'-4"	7'-8"	7'-1"	6'-7"	6'-2"
	0.032	11'-0"	10'-9"	10'-6"	10'-8"	9'-3"	8'-3"	7'-9"
	0.036	11'-5"	11'-2"	10'-11"	11'-1"	10'-9"	10'-6"	8'-4"
25	0.018	6'-3"	6'-0"	5'-7"	5'-10"	5'-5"	3'-7"	3'-4"
	0.024	8'-2"	7'-10"	7'-4"	7'-8"	7'-1"	6'-7"	6'-2"
	0.032	10'-10"	10'-8"	10'-5"	10'-6"	9'-2"	8'-3"	7'-9"
	0.036	11'-4"	11'-1"	10'-10"	10'-11"	10'-9"	10'-6"	8'-4"
30	0.018	6'-0"	5'-10"	5'-7"	5'-9"	5'-5"	3'-7"	3'-4"
	0.024	7'-10"	7'-7"	7'-4"	7'-6"	7'-1"	6'-7"	6'-2"
	0.032	10'-6"	9'-5"	9'-1"	9'-3"	8'-11"	8'-3"	7'-9"
	0.036	10'-11"	10'-9"	10'-7"	10'-8"	10'-4"	9'-3"	8'-4"
36	0.018	5'-9"	5'-7"	5'-4"	5'-6"	5'-3"	3'-7"	3'-4"
	0.024	7'-6"	7'-3"	7'-0"	7'-2"	6'-11"	6'-7"	6'-2"
	0.032	9'-3"	9'-0"	8'-9"	8'-11"	8'-7"	8'-3"	7'-9"
	0.036	10'-7"	10'-4"	9'-5"	9'-8"	9'-3"	8'-11"	8'-4"
42	0.018	5'-6"	5'-4"	5'-2"	5'-3"	4'-9"	3'-7"	0'-0"
	0.024	7'-2"	7'-0"	6'-9"	6'-11"	6'-8"	6'-5"	6'-2"
	0.032	8'-11"	8'-8"	8'-5"	8'-7"	8'-3"	8'-0"	7'-8"
	0.036	9'-8"	9'-4"	9'-1"	9'-3"	8'-11"	8'-8"	8'-4"
50	0.018	5'-3"	4'-9"	4'-7"	4'-9"	4'-6"	0'-0"	0'-0"
	0.024	6'-10"	6'-8"	6'-6"	6'-7"	6'-4"	6'-2"	5'-11"
	0.032	8'-6"	8'-3"	8'-0"	8'-2"	7'-11"	7'-8"	7'-5"
	0.036	9'-2"	8'-11"	8'-8"	8'-10"	8'-7"	8'-4"	8'-0"
60	0.018	4'-8"	4'-6"	4'-5"	4'-6"	0'-0"	0'-0"	0'-0"
	0.024	6'-6"	6'-4"	6'-2"	6'-3"	6'-1"	5'-11"	0'-0"
	0.032	8'-0"	7'-10"	7'-8"	7'-9"	7'-6"	7'-4"	0'-0"
	0.036	8'-8"	8'-6"	8'-4"	8'-5"	8'-2"	7'-11"	0'-0"

TABLE 4.14

2"x6" Flat Panel (Single Span) Detail N2, C

Ground Snow Load (psf)	Panel Gauge (in)	Wind Speed and Exposure: Exposure B 140	150	160	Exposure C 130	140	150	160
10	0.018	8'-0"	7'-7"	7'-3"	7'-6"	7'-0"	6'-7"	6'-2"
LIVE	0.024	11'-8"	11'-3"	10'-9"	11'-0"	10'-7"	8'-7"	7'-11"
	0.032	12'-10"	12'-6"	12'-2"	12'-4"	12'-0"	11'-7"	11'-3"
	0.040	13'-9"	13'-5"	13'-1"	13'-3"	12'-11"	12'-6"	12'-1"
20	0.018	7'-2"	6'-11"	6'-8"	6'-10"	6'-6"	6'-2"	5'-11"
LIVE	0.024	9'-2"	8'-10"	8'-6"	8'-9"	8'-4"	7'-11"	7'-7"
	0.032	11'-9"	11'-6"	11'-3"	11'-4"	11'-0"	10'-9"	10'-6"
	0.040	12'-7"	12'-4"	12'-1"	12'-3"	11'-10"	11'-7"	11'-3"
25	0.018	7'-1"	6'-10"	6'-7"	6'-9"	6'-5"	6'-2"	5'-10"
	0.024	9'-1"	8'-9"	8'-5"	8'-7"	8'-3"	7'-11"	7'-6"
	0.032	11'-7"	11'-4"	11'-2"	11'-3"	11'-0"	10'-9"	10'-6"
	0.040	12'-6"	12'-3"	12'-0"	12'-1"	11'-10"	11'-7"	11'-3"
30	0.018	6'-10"	6'-7"	6'-4"	6'-6"	6'-3"	6'-0"	5'-9"
	0.024	8'-9"	8'-5"	8'-2"	8'-4"	8'-0"	7'-8"	7'-4"
	0.032	11'-3"	11'-0"	10'-10"	10'-11"	10'-8"	10'-6"	9'-1"
	0.040	12'-1"	11'-10"	11'-8"	11'-9"	11'-6"	11'-3"	11'-0"
36	0.018	6'-6"	6'-3"	6'-1"	6'-3"	6'-0"	5'-9"	5'-6"
	0.024	8'-4"	8'-1"	7'-10"	8'-0"	7'-8"	7'-5"	7'-1"
	0.032	10'-10"	10'-8"	10'-6"	10'-7"	10'-5"	9'-2"	8'-9"
	0.040	11'-8"	11'-6"	11'-3"	11'-4"	11'-2"	10'-11"	10'-9"
42	0.018	6'-3"	6'-0"	5'-10"	6'-0"	5'-9"	5'-7"	5'-4"
	0.024	8'-0"	7'-9"	7'-6"	7'-8"	7'-5"	7'-2"	6'-10"
	0.032	10'-6"	9'-7"	9'-4"	9'-6"	9'-2"	8'-10"	8'-6"
	0.040	11'-3"	11'-1"	10'-11"	11'-0"	10'-10"	10'-8"	10'-5"
50	0.018	5'-11"	5'-9"	5'-7"	5'-9"	5'-6"	5'-4"	0'-0"
	0.024	7'-7"	7'-5"	7'-2"	7'-4"	7'-1"	6'-10"	6'-7"
	0.032	9'-5"	9'-2"	8'-11"	9'-1"	8'-9"	8'-6"	8'-2"
	0.040	10'-10"	10'-9"	10'-7"	10'-8"	10'-6"	9'-7"	9'-3"
60	0.018	5'-7"	5'-6"	5'-4"	5'-5"	5'-3"	0'-0"	0'-0"
	0.024	7'-2"	7'-0"	6'-10"	7'-0"	6'-9"	6'-7"	0'-0"
	0.032	8'-11"	8'-8"	8'-6"	8'-8"	8'-4"	8'-2"	0'-0"
	0.040	10'-5"	9'-9"	9'-7"	9'-8"	9'-5"	9'-2"	0'-0"

TABLE 4.15

NOTE: PANELS MAY OVERHANG 25% OF THEIR CLEARSPAN

2.5" x6" Super Six (Multispan) Detail N3, A

Ground Snow Load (psf)	Panel Gauge (in)	Wind Speed and Exposure: Exposure B 140	150	160	Exposure C 130	140	150	160
10	0.018	8'-8"	8'-3"	7'-11"	8'-1"	7'-10"	7'-5"	7'-0"
LIVE	0.024	10'-9"	10'-4"	9'-11"	10'-1"	9'-9"	9'-3"	8'-10"
	0.032	13'-7"	13'-1"	12'-7"	12'-9"	12'-4"	11'-8"	11'-2"
	0.036	14'-11"	14'-4"	13'-9"	14'-0"	13'-6"	12'-10"	12'-3"
20	0.018	7'-6"	7'-3"	7'-0"	7'-2"	6'-10"	6'-7"	6'-4"
LIVE	0.024	9'-5"	9'-1"	8'-10"	8'-11"	8'-7"	8'-2"	7'-11"
	0.032	11'-11"	11'-6"	11'-2"	11'-4"	10'-10"	10'-5"	10'-0"
	0.036	13'-1"	12'-8"	12'-3"	12'-5"	11'-11"	11'-5"	11'-0"
25	0.018	7'-5"	7'-2"	6'-11"	7'-0"	6'-10"	6'-7"	6'-4"
	0.024	9'-3"	8'-11"	8'-8"	8'-10"	8'-7"	8'-2"	7'-11"
	0.032	11'-8"	11'-4"	11'-0"	11'-2"	10'-10"	10'-5"	10'-0"
	0.036	12'-10"	12'-5"	12'-1"	12'-3"	11'-11"	11'-5"	11'-0"
30	0.018	7'-0"	6'-10"	6'-8"	6'-9"	6'-6"	6'-4"	6'-1"
	0.024	8'-10"	8'-7"	8'-4"	8'-5"	8'-1"	7'-11"	7'-7"
	0.032	11'-2"	10'-10"	10'-7"	10'-8"	10'-3"	10'-0"	9'-8"
	0.036	12'-3"	11'-11"	11'-7"	11'-9"	11'-4"	11'-0"	10'-8"
36	0.018	6'-8"	6'-6"	6'-4"	6'-4"	6'-3"	6'-0"	5'-10"
	0.024	8'-4"	8'-1"	7'-11"	8'-0"	7'-9"	7'-6"	7'-3"
	0.032	10'-7"	10'-3"	10'-0"	10'-2"	9'-11"	9'-7"	9'-3"
	0.036	11'-7"	11'-4"	11'-0"	11'-2"	10'-11"	10'-6"	10'-2"
42	0.018	6'-4"	6'-2"	6'-0"	6'-1"	5'-11"	5'-9"	5'-7"
	0.024	7'-11"	7'-8"	7'-6"	7'-7"	7'-5"	7'-2"	7'-0"
	0.032	10'-0"	9'-9"	9'-7"	9'-8"	9'-5"	9'-2"	8'-11"
	0.036	11'-0"	10'-9"	10'-6"	10'-8"	10'-5"	10'-1"	9'-9"
50	0.018	5'-11"	5'-10"	5'-8"	5'-9"	5'-7"	5'-5"	5'-4"
	0.024	7'-5"	7'-3"	7'-2"	7'-2"	7'-1"	6'-10"	6'-8"
	0.032	9'-5"	9'-3"	9'-1"	9'-2"	9'-0"	8'-9"	8'-6"
	0.036	10'-5"	10'-2"	10'-0"	10'-1"	9'-11"	9'-7"	9'-4"
60	0.018	5'-7"	5'-5"	5'-4"	5'-5"	5'-4"	5'-2"	0'-0"
	0.024	7'-0"	6'-10"	6'-9"	6'-9"	6'-8"	6'-6"	6'-4"
	0.032	8'-11"	8'-9"	8'-7"	8'-8"	8'-6"	8'-3"	8'-1"
	0.036	9'-9"	9'-7"	9'-5"	9'-6"	9'-4"	9'-1"	8'-11"

TABLE 4.16

3.5"x12" Super 12 (Multispan) Detail D

Ground Snow Load (psf)	Panel Gauge (in)	Wind Speed and Exposure: Exposure B 140	150	160	Exposure C 130	140	150	160
10	0.018	6'-1"	5'-8"	5'-4"	5'-6"	3'-11"	3'-7"	3'-2"
LIVE	0.024	8'-9"	8'-2"	7'-8"	7'-11"	7'-6"	6'-10"	6'-4"
	0.032	12'-4"	11'-8"	11'-0"	11'-4"	10'-9"	10'-0"	9'-4"
	0.036	13'-11"	13'-2"	12'-6"	12'-10"	12'-3"	11'-5"	10'-9"
20	0.018	4'-0"	3'-9"	3'-6"	3'-8"	3'-4"	3'-0"	2'-9"
LIVE	0.024	7'-1"	6'-8"	6'-4"	6'-6"	6'-1"	5'-8"	5'-4"
	0.032	10'-3"	9'-9"	9'-4"	9'-7"	9'-0"	8'-6"	8'-0"
	0.036	11'-8"	11'-2"	10'-9"	11'-0"	10'-4"	9'-9"	9'-3"
25	0.018	3'-11"	3'-8"	3'-5"	3'-7"	3'-3"	3'-0"	2'-9"
	0.024	6'-10"	6'-6"	6'-3"	6'-4"	6'-1"	5'-8"	5'-4"
	0.032	10'-0"	9'-7"	9'-2"	9'-4"	9'-0"	8'-6"	8'-0"
	0.036	11'-5"	11'-0"	10'-6"	10'-9"	10'-4"	9'-9"	9'-3"
30	0.018	3'-8"	3'-5"	3'-2"	3'-4"	3'-1"	2'-10"	2'-7"
	0.024	6'-4"	6'-1"	5'-10"	5'-11"	5'-7"	5'-4"	4'-0"
	0.032	9'-4"	9'-0"	8'-8"	8'-10"	8'-4"	8'-0"	7'-7"
	0.036	10'-9"	10'-4"	9'-11"	10'-2"	9'-7"	9'-3"	8'-10"
36	0.018	3'-4"	3'-1"	2'-11"	3'-1"	2'-10"	2'-8"	2'-1"
	0.024	5'-10"	5'-7"	5'-4"	5'-5"	5'-3"	4'-1"	3'-9"
	0.032	8'-8"	8'-4"	8'-0"	8'-2"	7'-11"	7'-6"	7'-2"
	0.036	9'-11"	9'-7"	9'-3"	9'-5"	9'-1"	8'-8"	8'-4"
42	0.018	3'-1"	2'-11"	2'-9"	2'-10"	2'-8"	2'-1"	0'-0"
	0.024	5'-4"	4'-5"	4'-2"	4'-4"	4'-1"	3'-10"	3'-7"
	0.032	8'-0"	7'-9"	7'-6"	7'-7"	7'-4"	7'-0"	6'-8"
	0.036	9'-3"	9'-0"	8'-8"	8'-10"	8'-7"	8'-2"	7'-10"
50	0.018	2'-9"	2'-8"	2'-2"	2'-7"	2'-2"	0'-0"	0'-0"
	0.024	4'-3"	4'-1"	3'-11"	4'-0"	3'-9"	3'-7"	3'-4"
	0.032	7'-4"	7'-2"	6'-11"	7'-0"	6'-10"	6'-6"	6'-3"
	0.036	8'-7"	8'-4"	8'-1"	8'-2"	7'-11"	7'-7"	7'-4"
60	0.018	2'-3"	2'-2"	2'-0"	2'-1"	0'-0"	0'-0"	0'-0"
	0.024	3'-11"	3'-9"	3'-7"	3'-8"	3'-6"	3'-3"	0'-0"
	0.032	6'-8"	6'-6"	6'-4"	6'-5"	6'-3"	6'-0"	5'-9"
	0.036	7'-10"	7'-7"	7'-5"	7'-6"	7'-4"	7'-1"	6'-9"

TABLE 4.17

2.5" x 12" Mark X (Multispan) Detail B

Ground Snow Load (psf)	Panel Gauge (in)	Wind Speed and Exposure: Exposure B 140	150	160	Exposure C 130	140	150	160
10	0.018	6'-9"	6'-5"	6'-2"	6'-4"	6'-1"	5'-9"	5'-5"
LIVE	0.024	9'-0"	8'-7"	8'-3"	8'-5"	8'-1"	7'-8"	7'-3"
	0.032	11'-3"	10'-9"	10'-4"	10'-6"	10'-2"	9'-7"	9'-2"
	0.036	12'-2"	11'-8"	11'-3"	11'-5"	11'-0"	10'-5"	9'-11"
20	0.018	5'-10"	5'-8"	5'-5"	5'-6"	5'-3"	4'-4"	4'-2"
LIVE	0.024	7'-9"	7'-6"	7'-3"	7'-5"	7'-1"	6'-9"	6'-6"
	0.032	9'-9"	9'-5"	9'-2"	9'-4"	8'-11"	8'-6"	8'-2"
	0.036	10'-7"	10'-3"	9'-11"	10'-1"	9'-8"	9'-3"	8'-11"
25	0.018	5'-9"	5'-6"	5'-4"	5'-5"	5'-3"	4'-4"	4'-1"
	0.024	7'-8"	7'-5"	7'-2"	7'-3"	7'-1"	6'-9"	6'-6"
	0.032	9'-7"	9'-4"	9'-0"	9'-2"	8'-11"	8'-6"	8'-2"
	0.036	10'-5"	10'-1"	9'-10"	9'-11"	9'-8"	9'-3"	8'-11"
30	0.018	5'-5"	5'-3"	4'-6"	5'-2"	4'-5"	4'-2"	4'-0"
	0.024	7'-3"	7'-1"	6'-10"	6'-11"	6'-8"	6'-6"	6'-3"
	0.032	9'-2"	8'-11"	8'-8"	8'-9"	8'-5"	8'-2"	7'-11"
	0.036	9'-11"	9'-8"	9'-5"	9'-6"	9'-2"	8'-11"	8'-7"
36	0.018	4'-7"	4'-5"	4'-3"	4'-5"	4'-2"	4'-0"	3'-10"
	0.024	6'-10"	6'-8"	6'-6"	6'-7"	6'-5"	6'-2"	6'-0"
	0.032	8'-8"	8'-5"	8'-2"	8'-4"	8'-1"	7'-10"	7'-7"
	0.036	9'-5"	9'-2"	8'-11"	9'-0"	8'-10"	8'-6"	8'-3"
42	0.018	4'-5"	4'-3"	4'-1"	4'-2"	4'-0"	3'-10"	3'-8"
	0.024	6'-6"	6'-4"	6'-2"	6'-3"	6'-1"	5'-11"	5'-9"
	0.032	8'-2"	8'-0"	7'-10"	7'-11"	7'-9"	7'-6"	7'-3"
	0.036	8'-11"	8'-8"	8'-6"	8'-7"	8'-5"	8'-2"	7'-11"
50	0.018	4'-2"	4'-0"	3'-11"	4'-0"	3'-10"	3'-8"	3'-6"
	0.024	6'-1"	6'-0"	5'-10"	5'-11"	5'-9"	5'-7"	5'-5"
	0.032	7'-9"	7'-7"	7'-5"	7'-6"	7'-4"	7'-1"	6'-11"
	0.036	8'-5"	8'-3"	8'-1"	8'-2"	8'-0"	7'-9"	7'-6"
60	0.018	3'-11"	3'-9"	3'-8"	3'-9"	3'-7"	3'-6"	0'-0"
	0.024	5'-9"	5'-7"	5'-6"	5'-7"	5'-5"	5'-3"	0'-0"
	0.032	7'-3"	7'-1"	7'-0"	7'-0"	6'-11"	6'-9"	6'-7"
	0.036	7'-11"	7'-9"	7'-7"	7'-8"	7'-6"	7'-4"	7'-2"

TABLE 4.18

2"x6" Flat Panel (Multispan) Detail N2, C

Ground Snow Load (psf)	Panel Gauge (in)	Wind Speed and Exposure: Exposure B 140	150	160	Exposure C 130	140	150	160
10	0.018	9'-2"	8'-9"	8'-5"	8'-7"	8'-3"	7'-10"	7'-6"
LIVE	0.024	11'-8"	11'-3"	10'-9"	11'-0"	10'-7"	10'-1"	9'-7"
	0.032	12'-10"	12'-6"	12'-2"	12'-4"	12'-0"	11'-7"	11'-3"
	0.040	13'-9"	13'-5"	13'-1"	13'-3"	12'-11"	12'-6"	12'-1"
20	0.018	8'-0"	7'-9"	7'-6"	7'-7"	7'-3"	7'-0"	6'-9"
LIVE	0.024	10'-3"	9'-11"	9'-7"	9'-9"	9'-4"	8'-11"	8'-7"
	0.032	11'-9"	11'-6"	11'-3"	11'-4"	11'-0"	10'-9"	10'-6"
	0.040	12'-7"	12'-4"	12'-1"	12'-3"	11'-10"	11'-7"	11'-3"
25	0.018	7'-10"	7'-7"	7'-5"	7'-6"	7'-3"	7'-0"	6'-9"
	0.024	10'-1"	9'-9"	9'-5"	9'-7"	9'-4"	8'-11"	8'-7"
	0.032	11'-7"	11'-4"	11'-2"	11'-3"	11'-0"	10'-9"	10'-6"
	0.040	12'-6"	12'-3"	12'-0"	12'-1"	11'-10"	11'-7"	11'-3"
30	0.018	7'-6"	7'-3"	7'-1"	7'-2"	6'-11"	6'-9"	6'-6"
	0.024	9'-7"	9'-4"	9'-1"	9'-2"	8'-10"	8'-7"	8'-4"
	0.032	11'-3"	11'-0"	10'-10"	10'-11"	10'-8"	10'-6"	10'-3"
	0.040	12'-1"	11'-10"	11'-8"	11'-9"	11'-6"	11'-3"	11'-0"
36	0.018	7'-1"	6'-11"	6'-9"	6'-10"	6'-8"	6'-5"	6'-3"
	0.024	9'-1"	8'-10"	8'-7"	8'-9"	8'-6"	8'-3"	8'-0"
	0.032	10'-10"	10'-8"	10'-6"	10'-7"	10'-5"	10'-2"	9'-10"
	0.040	11'-8"	11'-6"	11'-3"	11'-4"	11'-2"	10'-11"	10'-9"
42	0.018	6'-9"	6'-7"	6'-5"	6'-6"	6'-4"	6'-2"	6'-0"
	0.024	8'-7"	8'-5"	8'-3"	8'-4"	8'-2"	7'-11"	7'-8"
	0.032	10'-6"	10'-4"	10'-2"	10'-3"	10'-1"	9'-9"	9'-6"
	0.040	11'-3"	11'-1"	10'-11"	11'-0"	10'-10"	10'-8"	10'-5"
50	0.018	6'-4"	6'-3"	6'-1"	6'-2"	6'-0"	5'-10"	5'-9"
	0.024	8'-2"	8'-0"	7'-10"	7'-11"	7'-9"	7'-6"	7'-4"
	0.032	10'-1"	9'-10"	9'-8"	9'-9"	9'-7"	9'-4"	9'-1"
	0.040	10'-10"	10'-9"	10'-7"	10'-8"	10'-6"	10'-4"	10'-2"
60	0.018	6'-0"	5'-10"	5'-9"	5'-10"	5'-9"	5'-7"	5'-5"
	0.024	7'-8"	7'-6"	7'-5"	7'-5"	7'-4"	7'-2"	7'-0"
	0.032	9'-6"	9'-4"	9'-2"	9'-3"	9'-1"	8'-10"	8'-8"
	0.040	10'-5"	10'-4"	10'-2"	10'-3"	10'-2"	9'-11"	9'-8"

TABLE 4.19

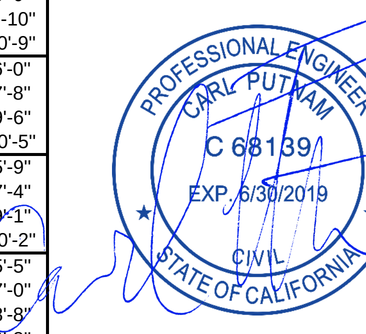

May 27 2017

Headers	Panel Thickness (in)	115 MPH EXPOSURE B				110 MPH EXPOSURE C OR 130 MPH EXPOSURE B			115 MPH EXPOSURE C OR 130 MPH EXPOSURE B			140 MPH EXPOSURE C OR 160 MPH EXPOSURE B					150 MPH EXPOSURE C OR 170 MPH EXPOSURE B						160 MPH EXPOSURE C OR 180 MPH EXPOSURE B						
		1	2	3	4	2	3	4	2	3	4	2	3	4	5	6	2	3	4	5	6	7	2	3	4	5	6	7	8
		Number of #10 Sheet Metal Screws Required **per foot** at Header/Panel Connection																											
Dble Headers	**0.018**	3'	7'	10'	MAX	5'	8'	MAX	5'	7'	MAX	3'	5'	6'	8'	MAX	3'	4'	5'	7'	8'	MAX	2'	3'	5'	6'	7'	8'	MAX
Single 3x8	**0.018**	3'	7'	10'	MAX	5'	8'	MAX	5'	7'	MAX	3'	5'	6'	8'	MAX	3'	4'	5'	7'	8'	MAX	2'	3'	5'	6'	7'	8'	MAX
All Others	**0.018**	3'	7'	10'	MAX	5'	8'	MAX	5'	7'	MAX	3'	5'	6'	8'	MAX	3'	4'	5'	7'	8'	MAX	2'	3'	5'	6'	7'	8'	MAX
Dble Headers	**0.024**	4'	9'	MAX	MAX	7'	10'	MAX	6'	9'	MAX	4'	6'	8'	10'	MAX	4'	5'	7'	9'	11'	MAX	3'	5'	6'	8'	9'	11'	MAX
Single 3x8	**0.024**	4'	9'	MAX	MAX	7'	10'	MAX	6'	9'	MAX	4'	6'	8'	10'	MAX	4'	5'	7'	9'	11'	MAX	3'	5'	6'	8'	9'	11'	MAX
All Others	**0.024**	4'	9'	MAX	MAX	7'	10'	MAX	6'	9'	MAX	4'	6'	8'	10'	MAX	4'	5'	7'	9'	11'	MAX	3'	5'	6'	8'	9'	11'	MAX
Dble Headers	**0.032**	6'	12'	MAX	MAX	9'	13'	MAX	8'	12'	MAX	5'	8'	11'	14'	MAX	5'	7'	9'	12'	14'	MAX	4'	6'	8'	10'	12'	MAX	MAX
Single 3x8	**0.032**	6'	12'	MAX	MAX	9'	13'	MAX	8'	12'	MAX	5'	8'	11'	14'	MAX	5'	7'	9'	12'	14'	MAX	4'	6'	8'	10'	12'	MAX	MAX
All Others	**0.032**	6'	12'	MAX	MAX	9'	13'	MAX	8'	12'	MAX	5'	8'	11'	14'	MAX	5'	7'	9'	12'	14'	MAX	4'	6'	8'	10'	12'	MAX	MAX
Dble Headers	**0.036**	6'	12'	MAX	MAX	9'	14'	MAX	8'	12'	MAX	6'	8'	11'	14'	MAX	5'	7'	10'	12'	14'	MAX	4'	6'	8'	11'	13'	15'	MAX
Single 3x8	**0.036**	7'	13'	MAX	MAX	10'	15'	MAX	9'	14'	MAX	6'	9'	12'	15'	MAX	5'	8'	11'	13'	MAX	MAX	5'	7'	9'	12'	14'	MAX	MAX
All Others	**0.036**	7'	13'	MAX	MAX	10'	15'	MAX	9'	14'	MAX	6'	9'	12'	15'	MAX	5'	8'	11'	13'	MAX	MAX	5'	7'	9'	12'	14'	MAX	MAX

Table 4.20 Maximum Tributary Width for Each Header/Panel and Number of #10 Screw Combination

Headers		115 MPH EXPOSURE B			110 MPH EXPOSURE C OR 130 MPH EXPOSURE B			115 MPH EXPOSURE C OR 130 MPH EXPOSURE B			140 MPH EXPOSURE C OR 160 MPH EXPOSURE B					150 MPH EXPOSURE C OR 170 MPH EXPOSURE B					160 MPH EXPOSURE C OR 180 MPH EXPOSURE B					
		1	2	3	1	2	3	1	2	3	1	2	3	4	5	1	2	3	4	5	1	2	3	4	5	6
		Number of #14 Sheet Metal Screws Required **per foot** at Header/Panel Connection																								
Dble Headers	**0.018**	6'	MAX	MAX	5'	MAX	MAX	4'	9'	MAX	3'	6'	9'	MAX	MAX	3'	5'	8'	MAX	MAX	2'	4'	7'	9'	MAX	MAX
Single 3x8	**0.018**	6'	MAX	MAX	5'	MAX	MAX	4'	9'	MAX	3'	6'	9'	MAX	MAX	3'	5'	8'	MAX	MAX	2'	4'	7'	9'	MAX	MAX
All Others	**0.018**	6'	MAX	MAX	5'	MAX	MAX	4'	9'	MAX	3'	6'	9'	MAX	MAX	3'	5'	8'	MAX	MAX	2'	4'	7'	9'	MAX	MAX
Dble Headers	**0.024**	8'	MAX	MAX	6'	MAX	MAX	5'	11'	MAX	4'	7'	11'	MAX	MAX	3'	6'	9'	MAX	MAX	3'	6'	8'	MAX	MAX	MAX
Single 3x8	**0.024**	8'	MAX	MAX	6'	MAX	MAX	6'	MAX	MAX	4'	8'	MAX	MAX	MAX	3'	7'	10'	MAX	MAX	3'	6'	9'	MAX	MAX	MAX
All Others	**0.024**	8'	MAX	MAX	6'	MAX	MAX	6'	MAX	MAX	4'	8'	MAX	MAX	MAX	3'	7'	10'	MAX	MAX	3'	6'	9'	MAX	MAX	MAX
Dble Headers	**0.032**	8'	MAX	MAX	6'	12'	MAX	5'	11'	MAX	4'	7'	11'	MAX	MAX	3'	6'	9'	13'	MAX	3'	6'	8'	11'	14'	MAX
Single 3x8	**0.032**	11'	MAX	MAX	8'	MAX	MAX	8'	MAX	MAX	5'	10'	MAX	MAX	MAX	4'	9'	13'	MAX	MAX	4'	8'	12'	MAX	MAX	MAX
All Others	**0.032**	11'	MAX	MAX	8'	MAX	MAX	8'	MAX	MAX	5'	10'	MAX	MAX	MAX	4'	9'	13'	MAX	MAX	4'	8'	12'	MAX	MAX	MAX
Dble Headers	**0.036**	8'	15'	MAX	6'	12'	MAX	5'	11'	MAX	4'	7'	11'	15'	MAX	3'	6'	9'	13'	MAX	3'	6'	8'	11'	14'	MAX
Single 3x8	**0.036**	11'	MAX	MAX	8'	MAX	MAX	8'	MAX	MAX	5'	10'	MAX	MAX	MAX	4'	9'	13'	MAX	MAX	4'	8'	12'	MAX	MAX	MAX
All Others	**0.036**	12'	MAX	MAX	9'	MAX	MAX	9'	MAX	MAX	6'	12'	MAX	MAX	MAX	5'	10'	15'	MAX	MAX	4'	9'	13'	MAX	MAX	MAX

Table 4.21 Maximum Tributary Width for Each Header/Panel and Number of #14 Screw Combination

Amerimax Exterior Home Products
28921 US Hwy 74
Romoland, CA 92585

Carl Putnam, P. E.
3441 Ivylink Place
Lynchburg, VA 24503
(434) 384-2514
carlputnam@comcast.net

PROFESSIONAL ENGINEER
CARL PUTNAM
C 68139
EXP. 6/30/2019
CIVIL
STATE OF CALIFORNIA

May 27 2017

SECTION 5.0 POST SPACING, POST TYPE AND FOOTING SIZE FOR SOLID COVERS

Ground Snow Load: 0 psf Live Load: 10 psf Roof Design Load 17 psf Wind Speed: 110 MPH EXPOSURE B Seismic Ss= 150% Seismic Design Category D Freestanding or Attached Structures

Table 5.1a — cubic footing "d"; Constrained Footing (in) by Max Post Length

Header	Detail	trib 3'	Min Post Type	Uplift Footing (in)	8'	10'	12'	trib 3.5'	Min Post Type	Uplift Footing (in)	8'	10'	12'	trib 4'	Min Post Type	Uplift Footing (in)	8'	10'	12'
On Slab	On Slab	22'-8"	A2					19'-5"	A2					17'-0"	A2				
0.042"x3"x8"	N30	11'-9"	A1	19	26	27	28	10'-10"	A1	20	25	26	28	10'-0"	A1	20	25	26	27
Double 3"x8"	N25	17'-3"	A2	22	28	30	31	16'-0"	A2	23	28	29	31	14'-11"	A2	23	27	29	30
Double 2"x6.625"	N25	15'-4"	A1	21	26	28	29	14'-3"	A2	22	26	27	28	13'-4"	A2	22	25	27	28
5.5" Extruded Fascia	L	13'-4"	A1	20	24	25	27	12'-3"	A1	21	23	25	26	11'-4"	A1	21	23	24	25
California Fascia	N10, G	13'-4"	A1	20	23	24	25	12'-2"	A1	21	22	24	25	11'-3"	A1	21	22	23	24
Alaskan Fascia	K	15'-9"	A1	21	25	26	28	14'-7"	A2	22	24	26	27	13'-6"	A2	22	24	25	27
Classic Fascia	H	21'-3"	A2	24	27	29	30	20'-3"	A2	24	27	29	30	19'-0"	C	25	27	28	29
16 G Steel C	N9, T	21'-7"	A2	24	30	32	33	19'-7"	A2	24	29	31	32	18'-0"	B	25	28	30	32
14 G Steel C	N9, T	25'-5"	C	25	31	33	34	23'-2"	C	26	30	32	34	21'-4"	C	26	30	31	33
12 G Steel C	N9, T	34'-9"	D	28	34	36	37	31'-11"	D	28	33	35	36	29'-8"	D	29	32	34	36
Double 16 G Steel C	N9, N25, T	37'-9"	D	29	34	36	38	35'-1"	D	29	34	36	37	32'-10"	E	30	33	35	37
Double 14 G Steel C	N9, N25, T	40'-0"	D	29	35	37	39	39'-0"	E	30	35	37	38	36'-7"	E	31	34	36	38
Double 12 G Steel C	N9, N25, T	40'-0"	D	29	35	37	39	40'-0"	E	31	35	37	39	40'-0"	E	32	35	37	39
Steel Cloverleaf	W	11'-7"	A1	19	20	21	22	10'-7"	A1	20	19	20	21	9'-9"	A1	20	19	20	21
DBL Steel Cloverleaf	AA	17'-9"	A2	22	22	23	24	16'-6"	A2	23	22	23	24	15'-6"	A2	23	21	23	24
4x3 I Beam	Y	14'-9"	A1	21	23	24	25	13'-8"	A1	21	22	24	25	12'-6"	A2	22	22	23	24
7x4 I Beam	Q	20'-10"	A2	23	29	30	32	20'-3"	B	24	28	30	31	19'-7"	C	25	28	30	31

Header	Detail	trib 4.5'	Min Post Type	Uplift Footing (in)	8'	10'	12'	trib 5'	Min Post Type	Uplift Footing (in)	8'	10'	12'	trib 5.5'	Min Post Type	Uplift Footing (in)	8'	10'	12'
On Slab	On Slab	15'-1"	A2					13'-7"	A2					12'-4"	A2				
0.042"x3"x8"	N30	9'-3"	A1	20	24	25	27	8'-8"	A1	21	24	25	26	8'-2"	A1	21	23	25	26
Double 3"x8"	N25	13'-10"	A2	23	27	28	30	13'-1"	A2	24	26	28	29	12'-5"	A2	24	26	27	29
Double 2"x6.625"	N25	12'-4"	A2	23	25	26	27	11'-9"	A2	23	24	26	27	11'-2"	A2	23	24	25	27
5.5" Extruded Fascia	L	10'-4"	A1	21	22	24	25	9'-9"	A2	22	22	23	25	9'-2"	A2	22	22	23	24
California Fascia	N10, G	10'-4"	A1	21	22	23	24	9'-8"	A2	22	21	22	23	9'-1"	A2	22	21	22	23
Alaskan Fascia	K	12'-6"	A2	23	23	25	26	11'-10"	A2	23	23	24	26	11'-3"	A2	23	23	24	25
Classic Fascia	H	17'-9"	C	25	26	28	29	16'-11"	C	26	26	27	29	16'-2"	C	26	25	27	28
16 G Steel C	N9, T	16'-4"	B	25	28	29	31	15'-3"	C	25	27	29	30	14'-3"	C	25	27	28	30
14 G Steel C	N9, T	19'-5"	C	26	29	31	32	18'-2"	C	27	29	30	32	17'-2"	C	27	28	30	31
12 G Steel C	N9, T	27'-3"	D	29	32	33	35	25'-9"	D	30	31	33	35	24'-4"	E	30	31	33	34
Double 16 G Steel C	N9, N25, T	30'-7"	E	30	33	34	36	29'-0"	E	31	32	34	36	27'-8"	E	32	32	34	35
Double 14 G Steel C	N9, N25, T	34'-2"	E	32	33	35	37	32'-6"	E	32	33	35	37	31'-0"	E	33	33	35	36
Double 12 G Steel C	N9, N25, T	40'-0"	E	33	35	37	39	39'-9"	F1	34	35	37	39	38'-0"	F1	35	34	36	38
Steel Cloverleaf	W	9'-0"	A1	20	19	20	21	8'-5"	A1	21	19	21	22	8'-0"	A1	21	20	21	22
DBL Steel Cloverleaf	AA	14'-6"	A2	24	21	22	23	13'-9"	A2	24	21	22	23	13'-2"	B	25	20	22	23
4x3 I Beam	Y	11'-4"	A2	22	21	22	24	10'-6"	A2	22	21	22	23	9'-10"	A2	22	20	22	23
7x4 I Beam	Q	18'-11"	C	26	28	30	31	18'-7"	C	27	28	29	31	17'-10"	C	27	27	29	30

Header	Detail	trib 6'	Min Post Type	Uplift Footing (in)	8'	10'	12'	trib 6.5'	Min Post Type	Uplift Footing (in)	8'	10'	12'	trib 7'	Min Post Type	Uplift Footing (in)	8'	10'	12'
On Slab	On Slab	11'-4"	A2					10'-5"	A1					9'-8"	A2				
0.042"x3"x8"	N30	7'-9"	A1	21	23	24	26	7'-4"	A1	21	23	24	25	7'-0"	A2	22	22	24	25
Double 3"x8"	N25	11'-10"	B	24	26	27	28	11'-3"	B	25	25	27	28	10'-10"	C	25	25	26	28
Double 2"x6.625"	N25	10'-8"	A2	24	24	25	26	10'-1"	A2	24	23	25	26	9'-9"	A2	24	23	25	26
5.5" Extruded Fascia	L	8'-8"	A2	22	22	23	24	8'-2"	A2	22	21	22	23	7'-9"	A2	22	21	22	24
California Fascia	N10, G	8'-7"	A2	22	21	22	23	8'-1"	A2	22	21	22	23	7'-8"	A2	22	21	22	24
Alaskan Fascia	K	10'-8"	A2	24	23	24	25	10'-1"	A2	24	22	24	25	9'-8"	A2	24	22	23	24
Classic Fascia	H	15'-6"	C	27	25	27	28	14'-10"	C	27	25	26	28	14'-4"	D	27	25	26	27
16 G Steel C	N9, T	13'-6"	C	26	26	28	29	12'-7"	C	26	26	28	29	11'-11"	C	26	26	27	28
14 G Steel C	N9, T	16'-2"	C	27	28	29	31	15'-2"	D	27	27	29	30	14'-5"	D	27	27	28	30
12 G Steel C	N9, T	23'-2"	E	31	30	32	34	21'-10"	E	31	30	32	33	20'-11"	E	31	30	31	33
Double 16 G Steel C	N9, N25, T	26'-6"	E	32	31	33	35	25'-3"	E	32	31	33	34	24'-4"	E	33	31	33	34
Double 14 G Steel C	N9, N25, T	29'-9"	E	33	32	34	36	28'-4"	F1	34	32	34	35	27'-4"	F1	34	32	34	35
Double 12 G Steel C	N9, N25, T	36'-6"	F1	36	34	36	38	34'-10"	F1	36	34	36	37	33'-7"	F1	36	33	35	37
Steel Cloverleaf	W	7'-7"	A1	21	20	22	23	7'-1"	A1	21	21	22	23	6'-10"	A1	21	21	22	24
DBL Steel Cloverleaf	AA	12'-8"	C	25	20	22	23	12'-1"	C	25	21	22	23	11'-8"	C	26	21	22	24
4x3 I Beam	Y	9'-3"	A2	23	20	22	23	8'-7"	A2	23	21	22	23	8'-1"	A2	23	21	22	24
7x4 I Beam	Q	16'-9"	D	27	27	29	30	15'-8"	D	28	27	28	29	14'-11"	D	28	26	28	29

Header	Detail	trib 7.5'	Min Post Type	Uplift Footing (in)	8'	10'	12'	trib 8'	Min Post Type	Uplift Footing (in)	8'	10'	12'
On Slab	On Slab	9'-1"	A2					8'-6"	A2				
0.042"x3"x8"	N30	6'-8"	A2	22	22	23	25	6'-5"	A2	22	22	23	24
Double 3"x8"	N25	10'-5"	C	25	25	26	27	10'-0"	C	25	25	26	27
Double 2"x6.625"	N25	9'-5"	A2	24	23	24	26	9'-1"	B	25	23	24	25
5.5" Extruded Fascia	L	7'-5"	A2	23	22	23	24	7'-2"	A2	23	22	23	24
California Fascia	N10, G	7'-4"	A2	22	22	23	24	7'-1"	A2	23	22	23	24
Alaskan Fascia	K	9'-4"	A2	24	22	23	24	8'-11"	B	25	22	23	24
Classic Fascia	H	13'-10"	D	28	24	26	27	13'-5"	D	28	24	26	27
16 G Steel C	N9, T	11'-2"	C	26	25	27	28	10'-6"	C	26	25	26	28
14 G Steel C	N9, T	13'-10"	D	28	27	28	30	13'-2"	D	28	26	28	29
12 G Steel C	N9, T	20'-1"	E	31	29	31	32	19'-4"	E	32	29	31	32
Double 16 G Steel C	N9, N25, T	23'-6"	E	33	30	32	34	22'-8"	F1	33	30	32	33
Double 14 G Steel C	N9, N25, T	26'-5"	F1	34	31	33	35	25'-8"	F1	35	31	33	35
Double 12 G Steel C	N9, N25, T	32'-7"	F1	37	33	35	37	31'-7"	F1	37	33	35	36
Steel Cloverleaf	W	6'-6"	A2	22	22	23	24	6'-3"	A2	22	22	23	24
DBL Steel Cloverleaf	AA	11'-3"	C	26	22	23	24	10'-11"	C	26	22	23	24
4x3 I Beam	Y	7'-8"	A2	23	22	23	24	7'-4"	A2	23	22	23	24
7x4 I Beam	Q	14'-2"	D	28	26	27	29	13'-7"	D	28	26	27	28

Header	Detail	trib 8.5'	Min Post Type	Uplift Footing (in)	8'	10'	12'	trib 9'	Min Post Type	Uplift Footing (in)	8'	10'	12'	trib 10'	Min Post Type	Uplift Footing (in)	8'	10'	12'
On Slab	On Slab	8'-0"	A2					7'-6"	A2					6'-9"	A2				
0.042"x3"x8"	N30	6'-1"	A2	22	22	24	25	5'-11"	A2	22	23	24	25	5'-6"	A2	23	23	25	26
Double 3"x8"	N25	9'-7"	C	26	24	26	27	9'-4"	C	26	24	25	27	8'-9"	C	26	24	25	26
Double 2"x6.625"	N25	8'-8"	B	25	23	24	25	8'-5"	C	25	23	24	25	8'-0"	C	26	23	25	26
5.5" Extruded Fascia	L	6'-9"	A2	23	22	24	25	6'-6"	A2	23	23	24	25	6'-1"	A2	23	23	25	26
California Fascia	N10, G	6'-8"	A2	23	22	24	25	6'-5"	A2	23	23	24	25	6'-0"	A2	23	23	25	26
Alaskan Fascia	K	8'-7"	B	25	22	24	25	8'-3"	C	25	23	24	25	7'-9"	C	25	23	25	26
Classic Fascia	H	13'-0"	D	28	24	25	27	12'-8"	D	29	24	25	27	12'-0"	D	29	24	25	26
16 G Steel C	N9, T	9'-10"	C	26	24	26	27	9'-4"	C	26	24	25	27	8'-5"	C	26	23	25	26
14 G Steel C	N9, T	12'-7"	D	28	26	27	29	12'-1"	D	28	26	27	29	11'-3"	D	29	25	27	28
12 G Steel C	N9, T	18'-5"	E	32	29	30	32	17'-10"	E	32	28	30	31	16'-9"	E	33	28	30	31
Double 16 G Steel C	N9, N25, T	21'-10"	F1	34	30	32	33	21'-2"	F1	34	30	31	33	20'-1"	F1	35	29	31	32
Double 14 G Steel C	N9, N25, T	24'-8"	F1	35	31	33	34	24'-0"	F1	35	31	32	34	22'-10"	F1	36	30	32	34
Double 12 G Steel C	N9, N25, T	30'-5"	F2	38	33	34	36	29'-8"	F2	38	32	34	36	28'-2"	F2	39	32	34	35
Steel Cloverleaf	W	6'-0"	A2	22	22	24	25	5'-9"	A2	22	23	24	25	5'-5"	A2	23	23	25	26
DBL Steel Cloverleaf	AA	10'-7"	C	26	22	24	25	10'-3"	C	27	23	24	25	9'-9"	D	27	23	25	26
4x3 I Beam	Y	6'-11"	A2	23	22	24	25	6'-7"	A2	23	23	24	25	6'-1"	A2	23	23	25	26
7x4 I Beam	Q	12'-10"	D	28	25	27	28	12'-4"	D	28	25	26	28	11'-5"	D	29	25	26	27

Header	Detail	trib 11'	Min Post Type	Uplift Footing (in)	8'	10'	12'	trib 12'	Min Post Type	Uplift Footing (in)	8'	10'	12'	trib 13'	Min Post Type	Uplift Footing (in)	8'	10'	12'
On Slab	On Slab	6'-2"	A2					5'-8"	A2					5'-2"	A2				
0.042"x3"x8"	N30	5'-1"	A2	23	24	25	26	4'-9"	A2	23	24	26	27	4'-6"	A2	23	25	26	28
Double 3"x8"	N25	8'-2"	C	26	24	25	26	7'-9"	C	27	24	26	27	7'-4"	C	27	25	26	28
Double 2"x6.625"	N25	7'-6"	C	26	24	25	26	7'-2"	C	26	24	26	27	6'-9"	C	26	25	26	28
5.5" Extruded Fascia	L	5'-8"	A2	23	24	25	26	5'-4"	A2	24	24	26	27	5'-0"	A2	24	25	26	28
California Fascia	N10, G	5'-6"	A2	23	24	25	26	5'-2"	A2	24	24	26	27	4'-10"	A2	24	25	26	28
Alaskan Fascia	K	7'-3"	C	25	24	25	26	6'-11"	C	26	24	26	27	6'-6"	C	26	25	26	28
Classic Fascia	H	11'-5"	D	30	24	25	26	11'-0"	E	30	24	26	27	10'-6"	E	30	25	26	28
16 G Steel C	N9, T	7'-7"	C	26	24	25	26	7'-0"	C	26	24	26	27	6'-5"	C	26	25	26	28
14 G Steel C	N9, T	10'-3"	D	29	25	26	27	9'-6"	D	29	24	26	27	8'-8"	D	29	25	26	28
12 G Steel C	N9, T	15'-8"	E	33	27	29	30	14'-10"	E	34	27	29	30	14'-0"	F1	33	27	28	30
Double 16 G Steel C	N9, N25, T	19'-0"	F1	35	29	31	32	18'-1"	F1	36	29	30	32	17'-3"	F1	36	28	30	31
Double 14 G Steel C	N9, N25, T	21'-8"	F1	37	30	32	33	20'-9"	F1	37	30	31	33	19'-10"	F2	38	29	31	32
Double 12 G Steel C	N9, N25, T	26'-10"	F2	39	31	33	35	25'-9"	F3	40	31	33	35	24'-8"	F3	40	31	33	34
Steel Cloverleaf	W	5'-0"	A2	23	24	25	26	4'-9"	A2	23	24	26	27	4'-6"	A2	23	25	26	28
DBL Steel Cloverleaf	AA	9'-4"	D	28	24	25	26	8'-11"	D	28	24	26	27	8'-7"	D	28	25	26	28
4x3 I Beam	Y	5'-7"	A2	23	24	25	26	5'-2"	A2	24	24	26	27	4'-10"	A2	23	25	26	28
7x4 I Beam	Q	10'-6"	D	29	24	25	27	9'-10"	D	29	24	26	27	9'-2"	D	29	25	26	28

Header	Detail	trib 14'	Min Post Type	Uplift Footing (in)	8'	10'	12'	trib 15'	Min Post Type	Uplift Footing (in)	8'	10'	12'	trib 16'	Min Post Type	Uplift Footing (in)	8'	10'	12'	trib 17'	Min Post Type	Uplift Footing (in)	8'	10'	12'
On Slab	On Slab	4'-10"	A2					4'-6"	A2					4'-3"	A2					4'-0"	A2				
0.042"x3"x8"	N30	4'-3"	A2	23	25	27	28	4'-0"	A2	23	26	27	29	3'-10"	A2	23	26	28	29	3'-7"	A2	23	27	28	29
Double 3"x8"	N25	7'-0"	D	27	25	27	28	6'-8"	D	27	26	27	29	6'-5"	D	28	26	28	29	6'-2"	D	28	27	28	29
Double 2"x6.625"	N25	6'-6"	C	27	25	27	28	6'-3"	C	27	26	27	29	6'-0"	C	27	26	28	29	5'-9"	C	27	27	28	29
5.5" Extruded Fascia	L	4'-9"	A2	24	25	27	28	4'-5"	A2	24	26	27	29	4'-3"	A2	24	26	28	29	4'-0"	A2	24	27	28	29
California Fascia	N10, G	4'-7"	A2	24	25	27	28	4'-4"	A2	24	26	27	29	4'-2"	A2	24	26	28	29	3'-11"	A2	24	27	28	29
Alaskan Fascia	K	6'-3"	C	26	25	27	28	5'-11"	C	26	26	27	29	5'-8"	C	27	26	28	29	5'-5"	C	27	27	28	29
Classic Fascia	H	10'-1"	E	31	25	27	28	9'-8"	E	31	26	27	29	9'-4"	E	31	26	28	29	8'-11"	E	32	27	28	29
16 G Steel C	N9, T	6'-0"	C	26	25	27	28	5'-7"	C	26	26	27	29	5'-3"	C	26	26	28	29	4'-11"	C	26	27	28	29
14 G Steel C	N9, T	8'-1"	D	29	25	27	28	7'-7"	D	29	26	27	29	7'-1"	D	29	26	28	29	6'-8"	D	29	27	28	29
12 G Steel C	N9, T	13'-4"	F1	34	26	28	29	12'-9"	F1	34	26	28	29	12'-2"	F1	34	26	28	29	11'-8"	F1	34	27	28	29
Double 16 G Steel C	N9, N25, T	16'-7"	F1	36	28	30	31	15'-11"	F1	37	28	29	31	15'-4"	F1	37	27	29	30	14'-9"	F1	37	27	29	30
Double 14 G Steel C	N9, N25, T	19'-1"	F2	38	29	31	32	18'-4"	F2	38	29	30	32	17'-9"	F2	39	28	30	31	17'-2"	F2	39	28	30	31
Double 12 G Steel C	N9, N25, T	23'-9"	F3	41	31	32	34	22'-11"	F3	41	30	32	34	22'-3"	F3	42	30	32	33	21'-6"	F4	42	30	32	33
Steel Cloverleaf	W	4'-3"	A2	23	25	27	28	4'-0"	A2	23	26	27	29	3'-10"	A2	23	26	28	29	3'-8"	A2	23	27	28	29
DBL Steel Cloverleaf	AA	8'-3"	D	29	25	27	28	7'-11"	D	29	26	27	29	7'-9"	D	29	26	28	29	7'-6"	D	30	27	28	29
4x3 I Beam	Y	4'-6"	A2	24	25	27	28	4'-3"	A2	24	26	27	29	4'-0"	A2	24	26	28	29	3'-9"	A2	24	27	28	29
7x4 I Beam	Q	8'-8"	D	29	25	27	28	8'-2"	D	29	26	27	29	7'-9"	D	29	26	28	29	7'-4"	D	30	27	28	29

Ground Snow Load: 0 psf Live Load: 20 psf Roof Design Load 24 psf Wind Speed: 110 MPH EXPOSURE B Seismic Ss= 150% Seismic Design Category D Freestanding or Attached Structures

Table 5.1b — cubic footing "d"; Constrained Footing (in) by Max Post Length

Header	Detail	trib 3'	Min Post Type	Uplift Footing (in)	8'	12'	15'	trib 3.5'	Min Post Type	Uplift Footing (in)	8'	12'	15'	trib 4'	Min Post Type	Uplift Footing (in)	8'	12'	15'
On Slab	On Slab	11'-10"	A2					10'-2"	A2					8'-11"	A2				
0.042"x3"x8"	N30	9'-6"	A1	18	24	27	28	8'-8"	A1	18	24	26	28	8'-0"	A1	19	23	26	27
Double 3"x8"	N25	14'-3"	A2	21	27	30	31	13'-1"	A2	21	26	29	31	12'-2"	A2	22	26	29	30
Double 2"x6.625"	N25	12'-8"	A2	20	25	28	29	11'-9"	A2	20	24	27	29	10'-11"	A2	21	24	26	28
5.5" Extruded Fascia	L	10'-9"	A1	19	23	25	27	9'-9"	A2	19	22	25	26	8'-11"	A2	19	22	24	25
California Fascia	N10, G	10'-8"	A1	19	22	24	25	9'-8"	A2	19	21	23	25	8'-10"	A2	19	21	23	24
Alaskan Fascia	K	12'-4"	A2	20	23	26	27	11'-9"	A2	20	23	26	27	10'-11"	A2	21	23	25	27
Classic Fascia	H	14'-3"	A2	21	25	27	29	13'-6"	A2	21	24	27	29	13'-0"	C	22	24	27	28
16 G Steel C	N9, T	16'-11"	B	22	28	31	33	15'-3"	C	22	27	30	32	13'-10"	C	23	27	30	31
14 G Steel C	N9, T	20'-2"	C	23	29	32	34	18'-2"	C	24	29	32	33	16'-8"	C	24	28	31	33
12 G Steel C	N9, T	26'-4"	D	25	31	35	37	25'-1"	D	26	31	34	36	23'-9"	E	27	31	34	36
Double 16 G Steel C	N9, N25, T	27'-5"	D	26	32	35	37	26'-1"	E	27	31	35	37	25'-0"	E	27	31	34	36
Double 14 G Steel C	N9, N25, T	29'-3"	D	26	32	36	38	27'-10"	E	27	32	35	37	26'-7"	E	28	31	35	37
Double 12 G Steel C	N9, N25, T	33'-3"	E	27	33	37	39	31'-7"	E	28	33	36	39	30'-3"	E	29	32	36	38
Steel Cloverleaf	W	9'-3"	A1	18	19	21	22	8'-5"	A1	18	18	20	21	7'-9"	A1	19	18	20	22
DBL Steel Cloverleaf	AA	12'-10"	A2	20	20	23	24	12'-3"	A2	21	20	22	24	11'-8"	A2	21	20	22	23
4x3 I Beam	Y	11'-9"	A2	19	21	24	25	10'-6"	A2	20	21	23	24	9'-6"	A2	20	20	22	24
7x4 I Beam	Q	18'-10"	C	23	28	31	33	17'-11"	C	23	27	30	32	17'-2"	D	24	27	30	32

Header	Detail	trib 4.5'	Min Post Type	Uplift Footing (in)	8'	12'	15'	trib 5'	Min Post Type	Uplift Footing (in)	8'	12'	15'	trib 5.5'	Min Post Type	Uplift Footing (in)	8'	12'	15'
On Slab	On Slab	7'-11"	A2					7'-1"	A2					6'-5"	A2				
0.042"x3"x8"	N30	7'-4"	A1	19	23	25	27	6'-10"	A2	19	22	25	26	6'-5"	A2	19	22	24	26
Double 3"x8"	N25	11'-3"	B	22	25	28	30	10'-7"	C	22	25	28	29	10'-0"	C	22	25	27	29
Double 2"x6.625"	N25	10'-1"	A2	21	23	26	28	9'-7"	A2	21	23	26	27	9'-1"	B	22	23	25	27
5.5" Extruded Fascia	L	8'-2"	A2	20	21	23	25	7'-7"	A2	20	21	23	24	7'-2"	A2	20	20	23	24
California Fascia	N10, G	8'-1"	A2	20	20	22	24	7'-6"	A2	20	20	22	23	7'-1"	A2	20	20	22	23
Alaskan Fascia	K	10'-1"	A2	21	22	25	26	9'-6"	A2	21	22	24	26	8'-11"	B	22	22	24	25
Classic Fascia	H	12'-6"	C	23	24	26	28	12'-1"	C	23	24	26	28	11'-8"	C	24	23	26	28
16 G Steel C	N9, T	12'-7"	C	23	26	29	30	11'-7"	C	23	25	28	30	10'-6"	C	23	25	28	29
14 G Steel C	N9, T	15'-2"	D	24	27	30	32	14'-1"	D	24	27	30	31	13'-2"	D	25	26	29	31
12 G Steel C	N9, T	21'-10"	E	27	30	33	35	20'-6"	E	28	29	33	35	19'-4"	E	28	29	32	34
Double 16 G Steel C	N9, N25, T	24'-0"	E	28	31	34	36	23'-3"	E	29	30	34	36	22'-6"	E	29	30	33	35
Double 14 G Steel C	N9, N25, T	25'-7"	E	29	31	35	37	24'-9"	E	29	31	34	36	24'-0"	F1	30	31	34	36
Double 12 G Steel C	N9, N25, T	29'-2"	F1	30	32	36	38	28'-2"	F1	31	32	35	37	27'-3"	F1	31	32	35	37
Steel Cloverleaf	W	7'-1"	A1	19	19	21	22	6'-8"	A1	19	19	22	23	6'-3"	A2	19	20	22	23
DBL Steel Cloverleaf	AA	11'-3"	B	22	20	22	23	10'-11"	C	22	19	22	23	10'-7"	C	23	20	22	23
4x3 I Beam	Y	8'-7"	A2	20	20	22	23	7'-11"	A2	20	19	22	23	7'-4"	A2	20	20	22	23
7x4 I Beam	Q	15'-8"	D	24	27	29	31	14'-7"	D	25	26	29	31	13'-7"	D	25	26	28	30

Header	Detail	trib 6'	Min Post Type	Uplift Footing (in)	8'	12'	15'	trib 6.5'	Min Post Type	Uplift Footing (in)	8'	12'	15'	trib 7'	Min Post Type	Uplift Footing (in)	8'	12'	15'	trib 7.5'	Min Post Type	Uplift Footing (in)	8'	12'	15'
On Slab	On Slab	5'-11"	A2					5'-5"	A2					5'-1"	A2					4'-9"	A2				
0.042"x3"x8"	N30	6'-1"	A2	20	22	24	25	5'-9"	A2	20	21	24	25	5'-5"	A2	20	21	24	25	5'-2"	A2	20	22	24	25
Double 3"x8"	N25	9'-6"	C	23	24	27	28	9'-1"	C	23	24	27	28	8'-8"	C	23	24	26	28	8'-4"	C	23	23	26	27
Double 2"x6.625"	N25	8'-8"	C	22	23	25	26	8'-3"	C	22	22	25	26	7'-11"	C	23	22	24	26	7'-7"	C	23	22	24	26
5.5" Extruded Fascia	L	6'-9"	A2	20	20	23	24	6'-4"	A2	20	21	23	24	6'-0"	A2	21	21	24	25	5'-9"	A2	21	22	24	25
California Fascia	N10, G	6'-7"	A2	20	20	23	24	6'-3"	A2	20	21	23	24	5'-11"	A2	20	21	24	25	5'-8"	A2	21	22	24	25
Alaskan Fascia	K	8'-6"	B	22	21	24	25	8'-1"	C	22	21	23	25	7'-9"	C	22	21	24	25	7'-5"	C	23	22	24	25
Classic Fascia	H	11'-4"	D	24	23	26	27	11'-1"	D	25	23	26	27	10'-9"	D	25	23	25	27	10'-7"	D	25	23	25	27
16 G Steel C	N9, T	9'-8"	C	23	24	27	29	8'-11"	C	23	24	26	28	8'-4"	C	23	23	26	27	7'-9"	C	23	23	26	27
14 G Steel C	N9, T	12'-5"	D	25	26	29	30	11'-9"	D	25	26	28	30	11'-1"	D	25	25	28	30	10'-6"	D	25	25	28	29
12 G Steel C	N9, T	18'-4"	E	28	29	32	34	17'-5"	E	29	28	31	33	16'-7"	E	29	28	31	33	15'-11"	E	29	28	31	32
Double 16 G Steel C	N9, N25, T	21'-8"	F1	30	30	33	35	20'-9"	F1	30	30	33	35	19'-11"	F1	31	29	32	34	19'-2"	F1	31	29	32	34
Double 14 G Steel C	N9, N25, T	23'-4"	F1	31	30	34	36	22'-9"	F1	31	30	33	35	22'-2"	F1	32	30	33	35	21'-8"	F1	32	30	33	35
Double 12 G Steel C	N9, N25, T	26'-6"	F1	32	31	35	37	25'-10"	F1	33	31	35	37	25'-2"	F2	33	31	34	36	24'-8"	F2	34	31	34	36
Steel Cloverleaf	W	5'-11"	A2	19	20	23	24	5'-7"	A2	20	21	23	24	5'-4"	A2	20	21	24	25	5'-1"	A2	20	22	24	25
DBL Steel Cloverleaf	AA	10'-3"	C	23	20	23	24	10'-0"	C	24	21	23	24	9'-9"	D	24	21	24	25	9'-5"	D	24	22	24	25
4x3 I Beam	Y	6'-10"	A2	20	20	23	24	6'-5"	A2	20	21	23	24	6'-0"	A2	21	21	24	25	5'-8"	A2	21	22	24	25
7x4 I Beam	Q	12'-9"	D	25	25	28	30	12'-0"	D	25	25	28	29	11'-4"	D	25	24	27	29	10'-9"	D	25	24	27	28

Header	Detail	trib 8'	Min Post Type	Uplift Footing (in)	8'	12'	15'	trib 8.5'	Min Post Type	Uplift Footing (in)	8'	12'	15'	trib 9'	Min Post Type	Uplift Footing (in)	8'	12'	15'
On Slab	On Slab	4'-5"	A2					4'-2"	A2					3'-11"	A2				
0.042"x3"x8"	N30	4'-11"	A2	20	22	24	26	4'-9"	A2	20	22	25	26	4'-6"	A2	20	23	25	27
Double 3"x8"	N25	8'-0"	C	24	23	26	27	7'-8"	C	24	23	25	27	7'-4"	C	24	23	25	27
Double 2"x6.625"	N25	7'-4"	C	23	22	24	26	7'-1"	C	23	22	25	26	6'-9"	C	23	23	25	27
5.5" Extruded Fascia	L	5'-6"	A2	21	22	24	26	5'-3"	A2	21	22	25	26	5'-0"	A2	21	23	25	27
California Fascia	N10, G	5'-4"	A2	21	22	24	26	5'-1"	A2	21	22	25	26	4'-10"	A2	21	23	25	27
Alaskan Fascia	K	7'-1"	C	23	22	24	26	6'-10"	C	23	22	25	26	6'-6"	C	23	23	25	27
Classic Fascia	H	10'-4"	D	26	23	25	27	10'-1"	D	26	23	25	27	9'-11"	D	26	23	25	27
16 G Steel C	N9, T	7'-4"	C	23	23	25	27	6'-10"	C	23	22	25	26	6'-5"	C	23	23	25	27
14 G Steel C	N9, T	9'-10"	D	25	24	27	29	9'-4"	D	25	24	27	28	8'-8"	D	25	24	26	28
12 G Steel C	N9, T	15'-3"	E	29	27	30	32	14'-8"	E	29	27	30	32	14'-0"	F1	30	27	30	31
Double 16 G Steel C	N9, N25, T	18'-6"	F1	31	29	32	34	17'-11"	F1	32	28	32	33	17'-3"	F1	32	28	31	33
Double 14 G Steel C	N9, N25, T	21'-2"	F1	33	30	33	35	20'-6"	F1	33	29	33	35	19'-10"	F2	33	29	32	34
Double 12 G Steel C	N9, N25, T	24'-1"	F2	34	31	34	36	23'-8"	F2	35	31	34	36	23'-2"	F2	35	30	34	36
Steel Cloverleaf	W	4'-10"	A2	20	22	24	26	4'-8"	A2	20	22	25	26	4'-6"	A2	20	23	25	27
DBL Steel Cloverleaf	AA	9'-1"	D	25	22	24	26	8'-10"	D	25	22	25	26	8'-7"	D	25	23	25	27
4x3 I Beam	Y	5'-4"	A2	21	22	24	26	5'-1"	A2	21	22	25	26	4'-10"	A2	21	23	25	27
7x4 I Beam	Q	10'-2"	D	26	24	26	28	9'-8"	D	26	24	26	28	9'-2"	D	26	23	26	27

Header	Detail	trib 9.5'	Min Post Type	Uplift Footing (in)	8'	12'	15'	trib 10'	Min Post Type	Uplift Footing (in)	8'	12'	15'	trib 11'	Min Post Type	Uplift Footing (in)	8'	12'	15'
On Slab	On Slab	3'-9"	A2					3'-6"	A2					3'-2"	A2				
0.042"x3"x8"	N30	4'-4"	A2	20	23	25	27	4'-2"	A2	20	23	26	27	3'-10"	A2	21	24	26	28
Double 3"x8"	N25	7'-1"	C	24	23	25	27	6'-11"	D	24	23	26	27	6'-6"	D	24	24	26	28
Double 2"x6.625"	N25	6'-7"	C	23	23	25	27	6'-4"	C	24	23	26	27	6'-0"	C	24	24	26	28
5.5" Extruded Fascia	L	4'-9"	A2	21	23	25	27	4'-7"	A2	21	23	26	27	4'-3"	A2	21	24	26	28
California Fascia	N10, G	4'-8"	A2	21	23	25	27	4'-6"	A2	21	23	26	27	4'-2"	A2	21	24	26	28
Alaskan Fascia	K	6'-4"	C	23	23	25	27	6'-1"	C	23	23	26	27	5'-8"	C	23	24	26	28
Classic Fascia	H	9'-9"	E	27	23	25	27	9'-7"	E	27	23	26	27	9'-3"	E	28	24	26	28
16 G Steel C	N9, T	6'-1"	C	23	23	25	27	5'-10"	C	23	23	26	27	5'-3"	C	23	24	26	28
14 G Steel C	N9, T	8'-3"	D	25	23	26	27	7'-10"	D	25	23	26	27	7'-2"	D	25	24	26	28
12 G Steel C	N9, T	13'-6"	F1	30	26	29	31	13'-1"	F1	30	26	29	31	12'-3"	F1	30	26	29	30
Double 16 G Steel C	N9, N25, T	16'-9"	F1	32	28	31	33	16'-3"	F1	32	28	31	33	15'-5"	F1	33	27	30	32
Double 14 G Steel C	N9, N25, T	19'-3"	F2	34	29	32	34	18'-9"	F2	34	29	32	34	17'-10"	F2	34	28	31	33
Double 12 G Steel C	N9, N25, T	22'-9"	F3	35	30	34	35	22'-5"	F3	36	30	33	35	21'-8"	F3	37	30	33	35
Steel Cloverleaf	W	4'-4"	A2	20	23	25	27	4'-2"	A2	20	23	26	27	3'-11"	A2	21	24	26	28
DBL Steel Cloverleaf	AA	8'-4"	D	25	23	25	27	8'-1"	D	26	23	26	27	7'-9"	D	26	24	26	28
4x3 I Beam	Y	4'-7"	A2	21	23	25	27	4'-5"	A2	21	23	26	27	4'-0"	A2	21	24	26	28
7x4 I Beam	Q	8'-10"	D	26	23	25	27	8'-5"	D	26	23	26	27	7'-9"	D	26	24	26	28

Header	Detail	trib 12'	Min Post Type	Uplift Footing (in)	8'	12'	15'	trib 13'	Min Post Type	Uplift Footing (in)	8'	12'	15'	trib 14'	Min Post Type	Uplift Footing (in)	8'	12'	15'	trib 15'	Min Post Type	Uplift Footing (in)	8'	12'	15'
On Slab	On Slab	2'-11"	A2					2'-8"	A2					2'-6"	A2					2'-4"	A2				
0.042"x3"x8"	N30	3'-7"	A2	21	24	27	29	3'-4"	A2	21	25	28	29	3'-2"	A2	21	25	28	30	2'-11"	A2	21	26	29	30
Double 3"x8"	N25	6'-1"	D	25	24	27	29	5'-9"	D	25	25	28	29	5'-5"	D	25	25	28	30	5'-2"	D	25	26	29	30
Double 2"x6.625"	N25	5'-8"	D	24	24	27	29	5'-5"	D	24	25	28	29	5'-1"	D	25	25	28	30	4'-11"	D	25	26	29	30
5.5" Extruded Fascia	L	4'-0"	A2	21	24	27	29	3'-9"	A2	22	25	28	29	3'-6"	B	22	25	28	30	3'-4"	B	22	26	29	30
California Fascia	N10, G	3'-10"	A2	21	24	27	29	3'-7"	A2	21	25	28	29	3'-5"	A2	21	25	28	30	3'-2"	A2	22	26	29	30
Alaskan Fascia	K	5'-5"	C	24	24	27	29	5'-1"	C	24	25	28	29	4'-10"	C	24	25	28	30	4'-7"	D	24	26	29	30
Classic Fascia	H	8'-10"	E	28	24	27	29	8'-5"	E	28	25	28	29	8'-0"	E	29	25	28	30	7'-8"	E	29	26	29	30
16 G Steel C	N9, T	4'-10"	C	23	24	27	29	4'-6"	C	23	25	28	29	4'-2"	C	23	25	28	30	3'-10"	C	23	26	29	30
14 G Steel C	N9, T	6'-7"	D	25	24	27	29	6'-1"	D	25	25	28	29	5'-7"	D	25	25	28	30	5'-3"	D	25	26	29	30
12 G Steel C	N9, T	11'-7"	F1	31	25	28	30	10'-11"	F1	31	25	28	29	10'-4"	F1	31	25	28	30	9'-10"	F1	31	26	29	30
Double 16 G Steel C	N9, N25, T	14'-8"	F2	33	27	30	32	14'-0"	F2	33	27	30	31	13'-4"	F2	34	26	29	31	12'-9"	F2	34	26	29	31
Double 14 G Steel C	N9, N25, T	17'-0"	F2	35	28	31	33	16'-4"	F3	35	28	31	33	15'-8"	F3	36	27	30	32	15'-1"	F3	36	27	30	32
Double 12 G Steel C	N9, N25, T	21'-1"	F4	37	30	33	35	20'-6"	F4	38	29	33	35	19'-9"	F4	38	29	32	34	19'-1"	F4	39	29	32	34
Steel Cloverleaf	W	3'-8"	A2	21	24	27	29	3'-5"	A2	21	25	28	29	3'-3"	A2	21	25	28	30	3'-1"	A2	21	26	29	30
DBL Steel Cloverleaf	AA	7'-5"	D	26	24	27	29	7'-2"	E	27	25	28	29	6'-10"	E	27	25	28	30	6'-7"	E	27	26	29	30
4x3 I Beam	Y	3'-9"	A2	21	24	27	29	3'-6"	A2	21	25	28	29	3'-3"	A2	21	25	28	30	3'-0"	A2	21	26	29	30
7x4 I Beam	Q	7'-3"	D	26	24	27	29	6'-9"	D	26	25	28	29	6'-4"	D	26	25	28	30	5'-11"	D	26	26	29	30

Amerimax Exterior Home Products
28921 US Hwy 74
Romoland, CA 92585

Carl Putnam, P. E.
3441 Ivylink Place
Lynchburg, VA 24503
(434) 384-2514
carlputnam@comcast.net

PROFESSIONAL ENGINEER CARL PUTNAM C 68139 EXP. 6/30/2019 CIVIL STATE OF CALIFORNIA

SECTION 5.0 POST SPACING, POST TYPE AND FOOTING SIZE FOR SOLID COVERS

Ground Snow Load: 0 psf Live Load: 10 psf Roof Design Load 20 psf Wind Speed: 110 MPH EXPOSURE C or 130 MPH EXPOSURE B Seismic Ss= 150% Seismic Design Category D Freestanding or Attached Structures

Table 5.2a

cubic footing "d" — Uplift Footing (in); Constrained Footing (in), Max Post Length

Header	Detail	trib 3'	Min Post Type	Uplift Footing (in)	8'	10'	12'	trib 3.5'	Min Post Type	Uplift Footing (in)	8'	10'	12'	trib 4'	Min Post Type	Uplift Footing (in)	8'	10'	12'
On Slab	On Slab	22'-8"	C					19'-5"	C					17'-0"	C				
0.042"x3"x8"	N30	10'-7"	A1	21	27	29	30	9'-8"	A1	21	27	28	29	8'-11"	A1	22	26	27	29
Double 3"x8"	N25	15'-8"	A2	24	30	32	33	14'-5"	A2	25	29	31	33	13'-5"	A2	25	29	30	32
Double 2"x6.625"	N25	14'-0"	A2	23	28	29	31	12'-11"	A2	24	27	29	30	12'-0"	A2	24	27	28	30
5.5" Extruded Fascia	L	12'-0"	A1	22	25	27	28	10'-11"	A1	22	25	26	28	10'-0"	A1	23	24	26	27
California Fascia	N10, G	11'-11"	A1	22	24	26	27	10'-10"	A1	22	24	25	26	10'-0"	A1	23	23	25	26
Alaskan Fascia	K	14'-3"	A2	23	26	28	29	13'-1"	A2	24	26	27	29	12'-2"	A2	24	25	27	28
Classic Fascia	H	19'-3"	A2	26	29	31	32	18'-3"	C	27	29	30	32	17'-4"	C	27	28	30	31
16 G Steel C	N9, T	19'-2"	A2	26	32	33	35	17'-3"	B	26	31	32	34	15'-9"	C	26	30	32	33
14 G Steel C	N9, T	22'-8"	C	27	33	35	36	20'-6"	C	28	32	34	36	18'-10"	C	28	31	33	35
12 G Steel C	N9, T	31'-4"	D	30	36	38	40	28'-8"	D	31	35	37	39	26'-6"	D	31	34	36	38
Double 16 G Steel C	N9, N25, T	34'-6"	D	31	37	39	41	31'-10"	E	32	36	38	40	29'-9"	E	33	35	37	39
Double 14 G Steel C	N9, N25, T	38'-5"	E	32	38	40	42	35'-7"	E	33	37	39	41	33'-3"	E	34	36	38	40
Double 12 G Steel C	N9, N25, T	40'-0"	E	33	38	40	42	40'-0"	E	34	38	40	42	40'-0"	F1	36	38	40	42
Steel Cloverleaf	W	10'-4"	A1	21	21	22	23	9'-5"	A1	21	21	22	23	8'-8"	A1	22	20	21	22
DBL Steel Cloverleaf	AA	16'-3"	A2	24	24	25	26	15'-1"	A2	25	23	24	26	14'-1"	A2	25	23	24	25
4x3 I Beam	Y	13'-4"	A1	23	24	26	27	12'-0"	A2	23	23	25	26	10'-11"	A2	23	23	24	25
7x4 I Beam	Q	19'-4"	A2	26	31	32	34	18'-7"	C	27	30	32	33	17'-11"	C	28	30	32	33

Header	Detail	trib 4.5'	Min Post Type	Uplift Footing (in)	8'	10'	12'	trib 5'	Min Post Type	Uplift Footing (in)	8'	10'	12'	trib 5.5'	Min Post Type	Uplift Footing (in)	8'	10'	12'
On Slab	On Slab	15'-1"	C					13'-7"	C					12'-4"	C				
0.042"x3"x8"	N30	8'-4"	A1	22	26	27	28	7'-9"	A1	23	25	27	28	7'-4"	A2	23	25	26	27
Double 3"x8"	N25	12'-7"	A2	26	28	30	31	11'-10"	B	26	28	30	31	11'-3"	B	26	28	29	31
Double 2"x6.625"	N25	11'-3"	A2	25	26	28	29	10'-8"	A2	25	26	27	29	10'-1"	A2	25	26	27	28
5.5" Extruded Fascia	L	9'-4"	A2	23	24	25	26	8'-8"	A2	23	23	25	26	8'-2"	A2	24	23	24	26
California Fascia	N10, G	9'-3"	A2	23	23	24	25	8'-7"	A2	23	22	24	25	8'-1"	A2	24	22	23	24
Alaskan Fascia	K	11'-4"	A2	25	25	26	28	10'-8"	A2	25	25	26	27	10'-1"	A2	25	24	26	27
Classic Fascia	H	16'-4"	C	28	28	29	31	15'-6"	C	28	27	29	30	14'-10"	C	29	27	29	30
16 G Steel C	N9, T	14'-6"	C	27	29	31	33	13'-6"	C	27	29	30	32	12'-7"	C	27	28	30	31
14 G Steel C	N9, T	17'-5"	C	28	31	33	34	16'-2"	C	29	30	32	33	15'-2"	D	29	30	31	33
12 G Steel C	N9, T	24'-8"	E	32	34	36	37	23'-2"	E	32	33	35	37	21'-10"	E	33	33	34	36
Double 16 G Steel C	N9, N25, T	28'-0"	E	33	35	37	38	26'-6"	E	34	34	36	38	25'-3"	E	34	34	36	37
Double 14 G Steel C	N9, N25, T	31'-4"	E	35	36	38	40	29'-9"	E	35	35	37	39	28'-4"	F1	36	35	37	39
Double 12 G Steel C	N9, N25, T	38'-5"	F1	37	38	40	42	36'-6"	F1	38	37	39	41	34'-10"	F1	38	37	39	41
Steel Cloverleaf	W	8'-1"	A1	22	21	22	23	7'-7"	A1	22	21	22	24	7'-1"	A1	23	22	23	24
DBL Steel Cloverleaf	AA	13'-4"	B	26	22	24	25	12'-8"	C	26	22	23	24	12'-1"	C	27	22	23	24
4x3 I Beam	Y	10'-0"	A2	24	22	24	25	9'-3"	A2	24	22	23	24	8'-7"	A2	24	22	23	24
7x4 I Beam	Q	17'-5"	C	28	30	31	33	16'-9"	D	29	29	31	33	15'-8"	D	29	29	31	32

Header	Detail	trib 6'	Min Post Type	Uplift Footing (in)	8'	10'	12'	trib 6.5'	Min Post Type	Uplift Footing (in)	8'	10'	12'	trib 7'	Min Post Type	Uplift Footing (in)	8'	10'	12'
On Slab	On Slab	11'-4"	C					10'-5"	A1					9'-8"	C				
0.042"x3"x8"	N30	6'-10"	A2	23	24	26	27	6'-6"	A2	23	24	25	27	6'-2"	A2	23	24	25	26
Double 3"x8"	N25	10'-7"	C	27	27	29	30	10'-1"	C	27	27	28	30	9'-8"	C	27	27	28	29
Double 2"x6.625"	N25	9'-7"	A2	26	25	27	28	9'-2"	B	26	25	26	28	8'-9"	B	26	25	26	27
5.5" Extruded Fascia	L	7'-7"	A2	24	23	24	25	7'-3"	A2	24	23	24	25	6'-10"	A2	24	23	24	26
California Fascia	N10, G	7'-6"	A2	24	22	24	25	7'-1"	A2	24	23	24	25	6'-9"	A2	24	23	24	26
Alaskan Fascia	K	9'-6"	A2	26	24	25	26	9'-0"	A2	26	24	25	26	8'-8"	B	26	23	25	26
Classic Fascia	H	14'-1"	D	29	27	28	30	13'-6"	D	30	27	28	29	13'-1"	D	30	26	28	29
16 G Steel C	N9, T	11'-7"	C	27	28	29	31	10'-8"	C	27	27	29	30	9'-11"	C	27	27	28	30
14 G Steel C	N9, T	14'-1"	D	29	29	31	32	13'-4"	D	29	29	30	32	12'-8"	D	30	28	30	31
12 G Steel C	N9, T	20'-6"	E	33	32	34	36	19'-6"	E	33	32	33	35	18'-7"	E	34	31	33	35
Double 16 G Steel C	N9, N25, T	23'-10"	E	35	33	35	37	22'-11"	E	35	33	35	37	22'-0"	F1	36	33	35	36
Double 14 G Steel C	N9, N25, T	26'-11"	F1	36	34	36	38	25'-10"	F1	37	34	36	38	24'-11"	F1	37	34	36	37
Double 12 G Steel C	N9, N25, T	33'-1"	F1	39	36	38	40	31'-10"	F1	39	36	38	40	30'-8"	F2	40	35	38	39
Steel Cloverleaf	W	6'-8"	A1	23	22	24	25	6'-4"	A2	23	23	24	25	6'-0"	A2	23	23	24	26
DBL Steel Cloverleaf	AA	11'-6"	C	27	22	24	25	11'-0"	C	28	23	24	25	10'-8"	C	28	23	24	26
4x3 I Beam	Y	7'-11"	A2	24	22	24	25	7'-5"	A2	24	23	24	25	7'-0"	A2	24	23	24	26
7x4 I Beam	Q	14'-7"	D	29	28	30	31	13'-9"	D	30	28	30	31	13'-0"	D	30	28	29	31

Header	Detail	trib 7.5'	Min Post Type	Uplift Footing (in)	8'	10'	12'	trib 8'	Min Post Type	Uplift Footing (in)	8'	10'	12'
On Slab	On Slab	9'-1"	C					8'-6"	C				
0.042"x3"x8"	N30	5'-11"	A2	24	24	25	26	5'-8"	A2	24	24	25	27
Double 3"x8"	N25	9'-4"	C	27	26	28	29	8'-11"	C	28	26	27	29
Double 2"x6.625"	N25	8'-5"	C	26	24	26	27	8'-2"	C	27	24	26	27
5.5" Extruded Fascia	L	6'-6"	A2	24	24	25	26	6'-3"	A2	24	24	25	27
California Fascia	N10, G	6'-5"	A2	24	24	25	26	6'-2"	A2	24	24	25	27
Alaskan Fascia	K	8'-3"	C	26	24	25	26	7'-11"	C	27	24	25	27
Classic Fascia	H	12'-8"	D	30	26	28	29	12'-3"	D	31	26	27	29
16 G Steel C	N9, T	9'-4"	C	27	26	28	29	8'-9"	C	27	26	27	29
14 G Steel C	N9, T	12'-1"	D	30	28	30	31	11'-6"	D	30	28	29	31
12 G Steel C	N9, T	17'-10"	E	34	31	33	34	17'-1"	E	34	31	32	34
Double 16 G Steel C	N9, N25, T	21'-2"	F1	36	32	34	36	20'-6"	F1	36	32	34	36
Double 14 G Steel C	N9, N25, T	24'-0"	F1	37	33	35	37	23'-3"	F1	38	33	35	37
Double 12 G Steel C	N9, N25, T	29'-8"	F2	40	35	37	39	28'-9"	F2	41	35	37	39
Steel Cloverleaf	W	5'-9"	A2	23	24	25	26	5'-6"	A2	23	24	25	27
DBL Steel Cloverleaf	AA	10'-3"	C	28	24	25	26	9'-11"	C	29	24	25	27
4x3 I Beam	Y	6'-7"	A2	24	24	25	26	6'-3"	A2	24	24	25	27
7x4 I Beam	Q	12'-4"	D	30	27	29	30	11'-9"	D	30	27	28	30

Uplift Footing (in); Footing (in), Max Post Length

Header	Detail	trib 8.5'	Min Post Type	Uplift Footing (in)	8'	10'	12'	trib 9'	Min Post Type	Uplift Footing (in)	8'	10'	12'	trib 10'	Min Post Type	Uplift Footing (in)	8'	10'	12'
On Slab	On Slab	8'-0"	C					7'-6"	C					6'-9"	C				
0.042"x3"x8"	N30	5'-5"	A2	24	24	26	27	5'-2"	A2	24	25	26	27	4'-9"	A2	22	25	27	28
Double 3"x8"	N25	8'-7"	C	28	26	27	29	8'-4"	C	28	26	27	28	7'-9"	C	25	25	27	28
Double 2"x6.625"	N25	7'-10"	C	27	24	26	27	7'-7"	C	27	25	26	27	7'-2"	C	25	25	27	28
5.5" Extruded Fascia	L	6'-0"	A2	25	24	26	27	5'-9"	A2	25	25	26	27	5'-4"	A2	22	25	27	28
California Fascia	N10, G	5'-10"	A2	24	24	26	27	5'-8"	A2	25	25	26	27	5'-2"	A2	22	25	27	28
Alaskan Fascia	K	7'-8"	C	27	24	26	27	7'-5"	C	27	25	26	27	6'-11"	C	24	25	27	28
Classic Fascia	H	11'-10"	D	31	26	27	28	11'-7"	D	31	25	27	28	11'-0"	E	29	25	27	28
16 G Steel C	N9, T	8'-3"	C	27	25	27	28	7'-9"	C	27	25	27	28	7'-0"	C	25	25	27	28
14 G Steel C	N9, T	11'-0"	D	30	27	29	30	10'-6"	D	30	27	29	30	9'-6"	D	27	26	28	29
12 G Steel C	N9, T	16'-6"	E	34	30	32	34	15'-11"	E	35	30	32	33	14'-10"	E	32	30	31	33
Double 16 G Steel C	N9, N25, T	19'-10"	F1	37	32	34	35	19'-2"	F1	37	32	33	35	18'-1"	F1	34	31	33	34
Double 14 G Steel C	N9, N25, T	22'-6"	F1	38	33	35	36	21'-11"	F1	39	33	34	36	20'-9"	F1	35	32	34	36
Double 12 G Steel C	N9, N25, T	27'-10"	F2	41	35	37	38	27'-1"	F2	41	34	36	38	25'-9"	F3	38	34	36	38
Steel Cloverleaf	W	5'-4"	A2	24	24	26	27	5'-1"	A2	24	25	26	27	4'-9"	A2	22	25	27	28
DBL Steel Cloverleaf	AA	9'-8"	D	29	24	26	27	9'-5"	D	29	25	26	27	8'-11"	D	27	25	27	28
4x3 I Beam	Y	5'-11"	A2	25	24	26	27	5'-8"	A2	25	25	26	27	5'-2"	A2	22	25	27	28
7x4 I Beam	Q	11'-2"	D	30	27	28	29	10'-9"	D	30	26	28	29	9'-10"	D	28	26	27	29

Header	Detail	trib 11'	Min Post Type	Uplift Footing (in)	8'	10'	12'	trib 12'	Min Post Type	Uplift Footing (in)	8'	10'	12'	trib 13'	Min Post Type	Uplift Footing (in)	8'	10'	12'
On Slab	On Slab	6'-2"	C					5'-8"	C					5'-2"	C				
0.042"x3"x8"	N30	4'-5"	A2	24	26	27	29	4'-2"	A2	22	27	28	29	3'-11"	A2	25	27	29	30
Double 3"x8"	N25	7'-4"	C	29	26	27	29	6'-11"	D	26	27	28	29	6'-6"	D	29	27	29	30
Double 2"x6.625"	N25	6'-9"	C	28	26	27	29	6'-4"	C	25	27	28	29	6'-1"	C	28	27	29	30
5.5" Extruded Fascia	L	4'-11"	A2	25	26	27	29	4'-7"	A2	23	27	28	29	4'-4"	A2	25	27	29	30
California Fascia	N10, G	4'-10"	A2	25	26	27	29	4'-6"	A2	23	27	28	29	4'-2"	A2	25	27	29	30
Alaskan Fascia	K	6'-6"	C	28	26	27	29	6'-1"	C	25	27	28	29	5'-9"	C	28	27	29	30
Classic Fascia	H	10'-6"	E	32	26	27	29	9'-11"	E	29	27	28	29	9'-5"	E	33	27	29	30
16 G Steel C	N9, T	6'-5"	C	27	26	27	29	5'-10"	C	25	27	28	29	5'-4"	C	27	27	29	30
14 G Steel C	N9, T	8'-8"	D	30	26	27	29	7'-10"	D	27	27	28	29	7'-3"	D	30	27	29	30
12 G Steel C	N9, T	13'-11"	F1	36	29	31	32	13'-1"	F1	32	29	30	32	12'-5"	F1	36	28	30	31
Double 16 G Steel C	N9, N25, T	17'-2"	F1	38	31	32	34	16'-3"	F1	35	30	32	34	15'-7"	F1	39	30	32	33
Double 14 G Steel C	N9, N25, T	19'-9"	F2	40	32	34	35	18'-9"	F2	36	31	33	35	18'-0"	F2	41	31	33	34
Double 12 G Steel C	N9, N25, T	24'-6"	F3	43	34	35	37	23'-5"	F3	39	33	35	37	22'-6"	F3	44	33	35	36
Steel Cloverleaf	W	4'-5"	A2	24	26	27	29	4'-2"	A2	22	27	28	29	3'-11"	A2	25	27	29	30
DBL Steel Cloverleaf	AA	8'-6"	D	30	26	27	29	8'-1"	D	27	27	28	29	7'-10"	D	31	27	29	30
4x3 I Beam	Y	4'-9"	A2	25	26	27	29	4'-5"	A2	22	27	28	29	4'-1"	A2	25	27	29	30
7x4 I Beam	Q	9'-1"	D	31	26	27	29	8'-5"	D	28	27	28	29	7'-11"	D	31	27	29	30

Header	Detail	trib 14'	Min Post Type	Uplift Footing (in)	8'	10'	12'	trib 15'	Min Post Type	Uplift Footing (in)	8'	10'	12'	trib 16'	Min Post Type	Uplift Footing (in)	8'	10'	12'	trib 17'	Min Post Type	Uplift Footing (in)	8'	10'	12'
On Slab	On Slab	4'-10"	C					4'-6"	C					4'-3"	C					4'-0"	C				
0.042"x3"x8"	N30	3'-8"	A2	25	28	29	31	3'-5"	A2	25	28	30	31	3'-3"	A2	25	29	30	32	3'-1"	A2	25	29	31	32
Double 3"x8"	N25	6'-2"	D	29	28	29	31	5'-11"	D	30	28	30	31	5'-8"	D	30	29	30	32	5'-5"	D	30	29	31	32
Double 2"x6.625"	N25	5'-9"	C	29	28	29	31	5'-6"	D	29	28	30	31	5'-4"	D	29	29	30	32	5'-1"	D	29	29	31	32
5.5" Extruded Fascia	L	4'-1"	A2	26	28	29	31	3'-10"	A2	26	28	30	31	3'-8"	A2	26	29	30	32	3'-6"	B	26	29	31	32
California Fascia	N10, G	4'-0"	A2	25	28	29	31	3'-9"	A2	25	28	30	31	3'-7"	A2	26	29	30	32	3'-4"	A2	26	29	31	32
Alaskan Fascia	K	5'-6"	C	28	28	29	31	5'-3"	C	28	28	30	31	5'-0"	C	29	29	30	32	4'-9"	D	29	29	31	32
Classic Fascia	H	9'-0"	E	33	28	29	31	8'-8"	E	34	28	30	31	8'-4"	E	34	29	30	32	8'-0"	E	34	29	31	32
16 G Steel C	N9, T	5'-0"	C	27	28	29	31	4'-8"	C	27	28	30	31	4'-4"	C	27	29	30	32	4'-1"	C	27	29	31	32
14 G Steel C	N9, T	6'-9"	D	30	28	29	31	6'-4"	D	30	28	30	31	5'-11"	D	30	29	30	32	5'-7"	D	30	29	31	32
12 G Steel C	N9, T	11'-9"	F1	36	28	29	31	11'-3"	F1	37	28	30	31	10'-9"	F1	37	29	30	32	10'-4"	F1	37	29	31	32
Double 16 G Steel C	N9, N25, T	14'-11"	F1	39	30	31	33	14'-4"	F2	40	29	31	32	13'-9"	F2	40	29	31	32	13'-3"	F2	40	29	31	32
Double 14 G Steel C	N9, N25, T	17'-4"	F2	41	31	32	34	16'-8"	F2	42	30	32	34	16'-1"	F3	42	30	32	33	15'-7"	F3	43	30	32	33
Double 12 G Steel C	N9, N25, T	21'-8"	F4	45	33	34	36	20'-11"	F4	45	32	34	36	20'-3"	F4	46	32	34	35	19'-8"	F4	46	32	34	35
Steel Cloverleaf	W	3'-9"	A2	25	28	29	31	3'-6"	A2	25	28	30	31	3'-4"	A2	25	29	30	32	3'-3"	A2	25	29	31	32
DBL Steel Cloverleaf	AA	7'-6"	D	31	28	29	31	7'-3"	E	32	28	30	31	7'-0"	E	32	29	30	32	6'-10"	E	32	29	31	32
4x3 I Beam	Y	3'-10"	A2	25	28	29	31	3'-7"	A2	25	28	30	31	3'-5"	A2	25	29	30	32	3'-2"	A2	25	29	31	32
7x4 I Beam	Q	7'-5"	D	31	28	29	31	7'-0"	D	31	28	30	31	6'-7"	D	31	29	30	32	6'-3"	D	32	29	31	32

Ground Snow Load: 0 psf Live Load: 20 psf Roof Design Load 28 psf Wind Speed: 110 MPH EXPOSURE C or 130 MPH EXPOSURE B Seismic Ss= 150% Seismic Design Category D Freestanding or Attached Structures

Table 5.2b

cubic footing "d" — Uplift Footing (in); Constrained Footing (in), Max Post Length

Header	Detail	trib 3'	Min Post Type	Uplift Footing (in)	8'	12'	15'	trib 3.5'	Min Post Type	Uplift Footing (in)	8'	12'	15'	trib 4'	Min Post Type	Uplift Footing (in)	8'	12'	15'
On Slab	On Slab	11'-10"	A2					10'-2"	A2					8'-11"	A2				
0.042"x3"x8"	N30	8'-10"	A1	20	26	29	30	8'-0"	A1	20	25	28	30	7'-4"	A1	20	25	27	29
Double 3"x8"	N25	13'-3"	A2	23	29	32	34	12'-2"	A2	23	28	31	33	11'-3"	B	24	28	31	32
Double 2"x6.625"	N25	11'-10"	A2	22	27	29	31	10'-11"	A2	22	26	29	31	10'-1"	A2	23	26	28	30
5.5" Extruded Fascia	L	9'-11"	A2	21	24	27	28	8'-11"	A2	21	24	26	28	8'-2"	A2	21	23	26	27
California Fascia	N10, G	9'-10"	A2	21	23	26	27	8'-10"	A2	21	23	25	26	8'-1"	A2	21	22	24	26
Alaskan Fascia	K	12'-0"	A2	22	25	28	30	10'-11"	A2	22	25	27	29	10'-1"	A2	23	24	27	28
Classic Fascia	H	14'-3"	A2	23	27	30	32	13'-6"	C	24	27	29	31	13'-0"	C	25	26	29	31
16 G Steel C	N9, T	15'-6"	C	24	30	33	35	13'-10"	C	24	29	32	34	12'-7"	C	25	28	31	33
14 G Steel C	N9, T	18'-6"	C	25	31	35	37	16'-8"	C	26	30	34	36	15'-2"	D	26	30	33	35
12 G Steel C	N9, T	26'-1"	D	28	34	38	40	23'-9"	E	29	33	37	39	21'-10"	E	29	33	36	38
Double 16 G Steel C	N9, N25, T	27'-5"	E	29	35	38	40	26'-1"	E	30	34	38	40	25'-0"	E	31	34	37	40
Double 14 G Steel C	N9, N25, T	29'-3"	E	29	35	39	41	27'-10"	E	31	35	38	41	26'-7"	E	31	34	38	40
Double 12 G Steel C	N9, N25, T	33'-3"	E	31	36	40	42	31'-7"	F1	32	36	40	42	30'-3"	F1	33	35	39	41
Steel Cloverleaf	W	8'-7"	A1	20	20	22	23	7'-9"	A1	20	20	22	23	7'-1"	A1	20	20	22	24
DBL Steel Cloverleaf	AA	12'-10"	A2	22	22	25	26	12'-3"	A2	23	22	24	26	11'-8"	C	24	22	24	25
4x3 I Beam	Y	10'-8"	A2	21	23	25	27	9'-6"	A2	21	22	25	26	8'-7"	A2	22	22	24	25
7x4 I Beam	Q	18'-10"	C	25	30	34	36	17'-3"	D	26	30	33	35	15'-8"	D	26	29	32	34

Header	Detail	trib 4.5'	Min Post Type	Uplift Footing (in)	8'	12'	15'	trib 5'	Min Post Type	Uplift Footing (in)	8'	12'	15'	trib 5.5'	Min Post Type	Uplift Footing (in)	8'	12'	15'
On Slab	On Slab	7'-11"	A2					7'-1"	A2					6'-5"	A2				
0.042"x3"x8"	N30	6'-9"	A2	21	24	27	28	6'-4"	A2	21	24	26	28	5'-11"	A2	21	23	26	27
Double 3"x8"	N25	10'-6"	C	24	27	30	32	9'-10"	C	24	27	30	31	9'-4"	C	25	26	29	31
Double 2"x6.625"	N25	9'-6"	A2	23	25	28	29	8'-11"	B	24	25	27	29	8'-5"	C	24	24	27	29
5.5" Extruded Fascia	L	7'-6"	A2	22	23	25	27	7'-0"	A2	22	22	25	26	6'-6"	A2	22	22	24	26
California Fascia	N10, G	7'-5"	A2	21	22	24	25	6'-11"	A2	22	21	24	25	6'-5"	A2	22	22	24	26
Alaskan Fascia	K	9'-5"	A2	23	24	26	28	8'-10"	B	23	23	26	27	8'-3"	C	24	23	26	27
Classic Fascia	H	12'-6"	C	25	26	29	30	12'-1"	D	26	26	29	30	11'-8"	D	27	26	28	30
16 G Steel C	N9, T	11'-4"	C	25	28	31	32	10'-3"	C	25	27	30	32	9'-4"	C	25	26	29	31
14 G Steel C	N9, T	13'-11"	D	26	29	32	34	12'-11"	D	27	29	32	33	12'-1"	D	27	28	31	33
12 G Steel C	N9, T	20'-3"	E	30	32	35	37	19'-0"	E	30	31	35	37	17'-10"	E	31	31	34	36
Double 16 G Steel C	N9, N25, T	23'-8"	E	31	33	37	39	22'-4"	F1	32	33	36	38	21'-2"	F1	32	32	36	38
Double 14 G Steel C	N9, N25, T	25'-7"	F1	32	34	38	40	24'-9"	F1	33	34	37	39	24'-0"	F1	34	33	37	39
Double 12 G Steel C	N9, N25, T	29'-2"	F1	34	35	39	41	28'-2"	F1	35	35	38	41	27'-3"	F1	35	34	38	40
Steel Cloverleaf	W	6'-7"	A2	21	21	23	24	6'-2"	A2	21	21	24	25	5'-9"	A2	21	22	24	26
DBL Steel Cloverleaf	AA	11'-3"	C	25	21	24	25	10'-9"	C	25	21	24	25	10'-3"	C	25	22	24	26
4x3 I Beam	Y	7'-9"	A2	22	21	23	25	7'-2"	A2	22	21	24	25	6'-7"	A2	22	22	24	26
7x4 I Beam	Q	14'-4"	D	27	28	31	33	13'-3"	D	27	28	31	33	12'-4"	D	27	27	30	32

Header	Detail	trib 6'	Min Post Type	Uplift Footing (in)	8'	12'	15'	trib 6.5'	Min Post Type	Uplift Footing (in)	8'	12'	15'	trib 7'	Min Post Type	Uplift Footing (in)	8'	12'	15'	trib 7.5'	Min Post Type	Uplift Footing (in)	8'	12'	15'
On Slab	On Slab	5'-11"	A2					5'-5"	A2					5'-1"	A2					4'-9"	A2				
0.042"x3"x8"	N30	5'-6"	A2	21	23	26	27	5'-3"	A2	22	23	25	27	4'-11"	A2	22	23	26	27	4'-8"	A2	22	24	26	28
Double 3"x8"	N25	8'-10"	C	25	26	29	30	8'-5"	C	25	26	28	30	8'-0"	C	25	25	28	30	7'-8"	C	26	25	28	29
Double 2"x6.625"	N25	8'-0"	C	24	24	27	28	7'-8"	C	24	24	26	28	7'-4"	C	25	24	26	28	7'-0"	C	25	24	26	28
5.5" Extruded Fascia	L	6'-2"	A2	22	22	25	26	5'-9"	A2	22	23	25	27	5'-6"	A2	22	23	26	27	5'-2"	A2	23	24	26	28
California Fascia	N10, G	6'-0"	A2	22	22	25	26	5'-8"	A2	22	23	25	27	5'-4"	A2	22	23	26	27	5'-1"	A2	22	24	26	28
Alaskan Fascia	K	7'-10"	C	24	23	25	27	7'-5"	C	24	23	25	27	7'-1"	C	24	23	26	27	6'-9"	C	25	24	26	28
Classic Fascia	H	11'-4"	D	27	25	28	30	11'-1"	D	28	25	28	30	10'-9"	D	28	25	28	29	10'-7"	D	29	25	28	29
16 G Steel C	N9, T	8'-6"	C	25	26	28	30	7'-10"	C	25	25	28	29	7'-4"	C	25	25	27	29	6'-10"	C	25	24	27	28
14 G Steel C	N9, T	11'-4"	D	27	28	31	32	10'-8"	D	27	27	30	32	9'-10"	D	27	27	30	31	9'-2"	D	27	26	29	31
12 G Steel C	N9, T	16'-10"	E	31	31	34	36	16'-0"	E	31	30	33	35	15'-3"	E	31	30	33	35	14'-7"	E	32	29	33	34
Double 16 G Steel C	N9, N25, T	20'-2"	F1	33	32	35	37	19'-4"	F1	33	32	35	37	18'-6"	F1	34	31	35	37	17'-10"	F1	34	31	34	36
Double 14 G Steel C	N9, N25, T	22'-11"	F1	34	33	37	39	22'-0"	F1	35	33	36	38	21'-2"	F1	35	32	36	38	20'-5"	F1	35	32	35	38
Double 12 G Steel C	N9, N25, T	26'-6"	F2	36	34	38	40	25'-10"	F2	37	34	38	40	25'-2"	F2	37	34	37	40	24'-8"	F2	38	34	37	39
Steel Cloverleaf	W	5'-5"	A2	21	22	25	26	5'-2"	A2	21	23	25	27	4'-10"	A2	22	23	26	27	4'-8"	A2	22	24	26	28
DBL Steel Cloverleaf	AA	9'-10"	C	26	22	25	26	9'-5"	D	26	23	25	27	9'-1"	D	27	23	26	27	8'-9"	D	27	24	26	28
4x3 I Beam	Y	6'-2"	A2	22	22	25	26	5'-9"	A2	22	23	25	27	5'-4"	A2	22	23	26	27	5'-1"	A2	22	24	26	28
7x4 I Beam	Q	11'-6"	D	27	27	30	31	10'-10"	D	27	26	29	31	10'-2"	D	28	26	29	30	9'-7"	D	28	26	28	30

Uplift Footing (in); Footing (in), Max Post Length

Header	Detail	trib 8'	Min Post Type	Uplift Footing (in)	8'	12'	15'	trib 8.5'	Min Post Type	Uplift Footing (in)	8'	12'	15'	trib 9'	Min Post Type	Uplift Footing (in)	8'	12'	15'
On Slab	On Slab	4'-5"	A2					4'-2"	A2					3'-11"	A2				
0.042"x3"x8"	N30	4'-5"	A2	22	24	27	28	4'-3"	A2	22	24	27	29	4'-1"	A2	22	25	27	29
Double 3"x8"	N25	7'-4"	C	26	25	27	29	7'-0"	D	26	24	27	29	6'-9"	D	26	25	27	29
Double 2"x6.625"	N25	6'-9"	C	25	24	27	28	6'-6"	C	25	24	27	29	6'-3"	C	25	25	27	29
5.5" Extruded Fascia	L	4'-11"	A2	23	24	27	28	4'-9"	A2	23	24	27	29	4'-6"	A2	23	25	27	29
California Fascia	N10, G	4'-10"	A2	22	24	27	28	4'-7"	A2	23	24	27	29	4'-5"	A2	23	25	27	29
Alaskan Fascia	K	6'-6"	C	25	24	27	28	6'-3"	C	25	24	27	29	6'-0"	C	25	25	27	29
Classic Fascia	H	10'-4"	E	29	25	27	29	10'-1"	E	29	25	27	29	9'-9"	E	30	25	27	29
16 G Steel C	N9, T	6'-5"	C	25	24	27	28	6'-0"	C	25	24	27	29	5'-8"	C	25	25	27	29
14 G Steel C	N9, T	8'-8"	D	27	26	29	30	8'-1"	D	27	25	28	30	7'-8"	D	27	25	28	29
12 G Steel C	N9, T	13'-11"	F1	32	29	32	34	13'-4"	F1	32	29	32	34	12'-10"	F1	32	28	32	33
Double 16 G Steel C	N9, N25, T	17'-2"	F1	34	31	34	36	16'-7"	F1	35	30	34	36	16'-1"	F1	35	30	33	35
Double 14 G Steel C	N9, N25, T	19'-9"	F2	36	32	35	37	19'-1"	F2	36	31	35	37	18'-6"	F2	37	31	35	37
Double 12 G Steel C	N9, N25, T	24'-1"	F3	38	33	37	39	23'-8"	F3	39	33	37	39	23'-1"	F3	39	33	37	39
Steel Cloverleaf	W	4'-5"	A2	22	24	27	28	4'-3"	A2	22	24	27	29	4'-1"	A2	22	25	27	29
DBL Steel Cloverleaf	AA	8'-6"	D	27	24	27	28	8'-3"	D	27	24	27	29	8'-0"	D	28	25	27	29
4x3 I Beam	Y	4'-9"	A2	22	24	27	28	4'-6"	A2	22	24	27	29	4'-3"	A2	22	25	27	29
7x4 I Beam	Q	9'-1"	D	28	25	28	30	8'-8"	D	28	25	28	29	8'-3"	D	28	25	27	29

Header	Detail	trib 9.5'	Min Post Type	Uplift Footing (in)	8'	12'	15'	trib 10'	Min Post Type	Uplift Footing (in)	8'	12'	15'	trib 11'	Min Post Type	Uplift Footing (in)	8'	12'	15'
On Slab	On Slab	3'-9"	A2					3'-6"	A2					3'-2"	A2				
0.042"x3"x8"	N30	3'-11"	A2	22	25	28	29	3'-9"	A2	22	25	28	30	3'-5"	A2	22	26	29	30
Double 3"x8"	N25	6'-6"	D	26	25	28	29	6'-4"	D	26	25	28	30	5'-11"	D	27	26	29	30
Double 2"x6.625"	N25	6'-1"	C	26	25	28	29	5'-10"	C	26	25	28	30	5'-6"	D	26	26	29	30
5.5" Extruded Fascia	L	4'-4"	A2	23	25	28	29	4'-2"	A2	23	25	28	30	3'-10"	A2	23	26	29	30
California Fascia	N10, G	4'-2"	A2	23	25	28	29	4'-0"	A2	23	25	28	30	3'-9"	A2	23	26	29	30
Alaskan Fascia	K	5'-9"	C	25	25	28	29	5'-7"	C	25	25	28	30	5'-2"	C	26	26	29	30
Classic Fascia	H	9'-5"	E	30	25	28	29	9'-2"	E	30	25	28	30	8'-7"	E	30	26	29	30
16 G Steel C	N9, T	5'-4"	C	25	25	28	29	5'-1"	C	25	25	28	30	4'-8"	C	25	26	29	30
14 G Steel C	N9, T	7'-3"	D	27	25	28	29	6'-11"	D	27	25	28	30	6'-3"	D	27	26	29	30
12 G Steel C	N9, T	12'-5"	F1	33	28	31	33	12'-0"	F1	33	28	31	33	11'-2"	F1	33	27	30	32
Double 16 G Steel C	N9, N25, T	15'-7"	F1	35	30	33	35	15'-1"	F1	35	30	33	35	14'-3"	F2	36	29	32	34
Double 14 G Steel C	N9, N25, T	18'-0"	F2	37	31	34	36	17'-6"	F2	37	31	34	36	16'-7"	F2	38	30	34	36
Double 12 G Steel C	N9, N25, T	22'-6"	F3	40	33	36	38	21'-11"	F3	40	33	36	38	20'-10"	F4	41	32	36	38
Steel Cloverleaf	W	3'-11"	A2	22	25	28	29	3'-9"	A2	22	25	28	30	3'-6"	A2	23	26	29	30
DBL Steel Cloverleaf	AA	7'-10"	D	28	25	28	29	7'-7"	D	28	25	28	30	7'-3"	E	29	26	29	30
4x3 I Beam	Y	4'-1"	A2	23	25	28	29	3'-11"	A2	23	25	28	30	3'-7"	A2	23	26	29	30
7x4 I Beam	Q	7'-11"	D	28	25	28	29	7'-7"	D	28	25	28	30	6'-11"	D	28	26	29	30

Header	Detail	trib 12'	Min Post Type	Uplift Footing (in)	8'	12'	15'	trib 13'	Min Post Type	Uplift Footing (in)	8'	12'	15'	trib 14'	Min Post Type	Uplift Footing (in)	8'	12'	15'	trib 15'	Min Post Type	Uplift Footing (in)	8'	12'	15'
On Slab	On Slab	2'-11"	A2					2'-8"	A2					2'-6"	A2					2'-4"	A2				
0.042"x3"x8"	N30	3'-2"	A2	22	27	29	31	3'-0"	A2	23	27	30	32	2'-10"	A2	23	28	31	32	2'-8"	A2	23	28	31	33
Double 3"x8"	N25	5'-6"	D	27	27	29	31	5'-3"	D	27	27	30	32	4'-11"	D	27	28	31	32	4'-8"	D	27	28	31	33
Double 2"x6.625"	N25	5'-2"	D	26	27	29	31	4'-11"	D	27	27	30	32	4'-8"	D	27	28	31	32	4'-6"	D	27	28	31	33
5.5" Extruded Fascia	L	3'-7"	A2	23	27	29	31	3'-4"	B	23	27	30	32	3'-2"	B	24	28	31	32	3'-0"	B	24	28	31	33
California Fascia	N10, G	3'-6"	A2	23	27	29	31	3'-3"	A2	23	27	30	32	3'-0"	A2	23	28	31	32	2'-10"	B	23	28	31	33
Alaskan Fascia	K	4'-11"	C	26	27	29	31	4'-8"	D	26	27	30	32	4'-5"	D	26	28	31	32	4'-2"	D	26	28	31	33
Classic Fascia	H	8'-2"	E	31	27	29	31	7'-9"	E	31	27	30	32	7'-5"	E	31	28	31	32	7'-1"	E	31	28	31	33
16 G Steel C	N9, T	4'-3"	C	25	27	29	31	3'-11"	C	25	27	30	32	3'-8"	C	25	28	31	32	3'-5"	C	25	28	31	33
14 G Steel C	N9, T	5'-9"	D	27	27	29	31	5'-4"	D	27	27	30	32	4'-11"	D	27	28	31	32	4'-7"	D	27	28	31	33
12 G Steel C	N9, T	10'-6"	F1	33	27	30	32	10'-0"	F1	34	27	30	32	9'-6"	F1	34	28	31	32	9'-0"	F1	34	28	31	33
Double 16 G Steel C	N9, N25, T	13'-6"	F2	36	29	32	34	12'-11"	F2	37	29	32	33	12'-4"	F2	37	28	31	33	11'-10"	F2	37	28	31	33
Double 14 G Steel C	N9, N25, T	15'-10"	F3	38	30	33	35	15'-2"	F3	39	30	33	35	14'-7"	F3	39	29	33	34	14'-0"	F3	39	29	32	34
Double 12 G Steel C	N9, N25, T	20'-0"	F4	41	32	35	37	19'-3"	F4	42	32	35	37	18'-6"	F5	42	31	35	37	17'-10"	F5	43	31	34	36
Steel Cloverleaf	W	3'-4"	A2	23	27	29	31	3'-1"	A2	23	27	30	32	2'-11"	A2	23	28	31	32	2'-10"	A2	23	28	31	33
DBL Steel Cloverleaf	AA	6'-11"	E	29	27	29	31	6'-8"	E	29	27	30	32	6'-5"	E	30	28	31	32	6'-2"	E	30	28	31	33
4x3 I Beam	Y	3'-3"	A2	23	27	29	31	3'-1"	A2	23	27	30	32	2'-10"	A2	23	28	31	32	2'-8"	A2	23	28	31	33
7x4 I Beam	Q	6'-5"	D	28	27	29	31	6'-0"	D	28	27	30	32	5'-8"	D	29	28	31	32	5'-3"	E	29	28	31	33

Amerimax Exterior Home Products
28921 US Hwy 74
Romoland, CA 92585

Carl Putnam, P. E.
3441 Ivylink Place
Lynchburg, VA 24503
(434) 384-2514
carlputnam@comcast.net

PROFESSIONAL ENGINEER
CARL PUTNAM
C 68139
EXP. 6/30/2019
CIVIL
STATE OF CALIFORNIA

May 27 2017

SECTION 5.0 POST SPACING, POST TYPE AND FOOTING SIZE FOR SOLID COVERS

Ground Snow Load: 0 psf Live Load: 10 psf Roof Design Load 18 psf Wind Speed: 115 MPH EXPOSURE B Seismic Ss= 150% Seismic Design Category D Freestanding or Attached Structures

Table 5.3a (cubic footing "d", Constrained Footing (in), Max Post Length)

Header	Detail	trib 3'	Min Post Type	Uplift Footing (in)	8'	10'	12'	trib 3.5'	Min Post Type	Uplift Footing (in)	8'	10'	12'	trib 4'	Min Post Type	Uplift Footing (in)	8'	10'	12'	trib 4.5'	Min Post Type	Uplift Footing (in)	8'	10'	12'	trib 5'	Min Post Type	Uplift Footing (in)	8'	10'	12'
On Slab	On Slab	22'-8"	B					19'-5"	B					17'-0"	B					15'-1"	B					13'-7"	B				
0.042"x3"x8"	N30	11'-6"	A1	20	26	28	29	10'-5"	A1	20	25	27	28	9'-8"	A1	21	25	26	28	9'-1"	A1	21	24	26	27	8'-5"	A1	21	24	25	27
Double 3"x8"	N25	16'-11"	A2	23	29	30	32	15'-5"	A2	23	28	30	31	14'-5"	A2	24	28	29	31	13'-8"	A2	24	27	29	30	12'-9"	A2	24	27	28	30
Double 2"x6.625"	N25	15'-0"	A1	22	27	28	29	13'-9"	A2	22	26	27	29	12'-11"	A2	23	26	27	28	12'-2"	A2	23	25	27	28	11'-5"	A2	23	25	26	27
5.5" Extruded Fascia	L	13'-0"	A1	21	24	26	27	11'-9"	A1	21	24	25	26	10'-11"	A1	21	23	25	26	10'-2"	A1	22	23	24	25	9'-5"	A2	22	22	24	25
California Fascia	N10, G	13'-0"	A1	21	23	25	26	11'-8"	A1	21	23	24	25	10'-10"	A1	21	22	24	25	10'-2"	A1	22	22	23	24	9'-5"	A2	22	21	23	24
Alaskan Fascia	K	15'-5"	A2	22	25	27	28	14'-0"	A2	22	25	26	27	13'-1"	A2	23	24	26	27	12'-4"	A2	23	24	25	27	11'-6"	A2	24	24	25	26
Classic Fascia	H	20'-10"	A2	24	28	29	31	19'-7"	B	25	27	29	30	18'-6"	C	26	27	29	30	17'-6"	C	26	27	28	29	16'-6"	C	27	26	28	29
16 G Steel C	N9, T	21'-1"	A2	24	30	32	34	18'-9"	A2	25	29	31	33	17'-3"	B	25	29	31	32	16'-0"	C	25	28	30	31	14'-9"	C	26	28	29	31
14 G Steel C	N9, T	24'-10"	C	26	32	33	35	22'-2"	C	26	31	33	34	20'-6"	C	26	30	32	33	19'-1"	C	27	30	31	33	17'-8"	C	27	29	31	32
12 G Steel C	N9, T	34'-0"	D	28	34	36	38	30'-9"	D	29	33	35	37	28'-8"	D	30	33	35	36	26'-10"	D	30	32	34	36	25'-0"	E	30	32	33	35
Double 16 G Steel C	N9, N25, T	37'-0"	D	29	35	37	39	33'-11"	D	30	34	36	38	31'-10"	E	31	34	36	37	30'-2"	E	31	33	35	37	28'-4"	E	32	33	35	36
Double 14 G Steel C	N9, N25, T	40'-0"	D	30	36	38	40	37'-9"	E	31	35	37	39	35'-7"	E	32	35	37	38	33'-8"	E	32	34	36	38	31'-9"	E	33	34	36	37
Double 12 G Steel C	N9, N25, T	40'-0"	D	30	36	38	40	40'-0"	E	32	36	38	40	40'-0"	E	33	36	38	40	40'-0"	F1	34	36	38	40	38'-10"	F1	35	35	37	39
Steel Cloverleaf	W	11'-3"	A1	20	20	21	22	10'-2"	A1	20	20	21	22	9'-5"	A1	20	19	20	21	8'-10"	A1	21	19	21	21	8'-2"	A1	21	20	21	22
DBL Steel Cloverleaf	AA	17'-5"	A2	23	22	24	25	16'-0"	A2	23	22	23	24	15'-1"	A2	24	22	23	24	14'-3"	A2	24	21	23	24	13'-6"	A2	25	21	22	23
4x3 I Beam	Y	14'-6"	A1	21	23	24	26	13'-1"	A1	22	22	24	25	12'-0"	A2	22	22	23	24	11'-1"	A2	22	22	23	24	10'-2"	A2	23	21	22	23
7x4 I Beam	Q	20'-7"	A2	24	29	31	32	19'-9"	B	25	29	31	32	19'-2"	C	26	29	30	32	18'-7"	C	27	28	30	31	18'-1"	C	27	28	30	31

Header	Detail	trib 5.5'	Min Post Type	Uplift Footing (in)	8'	10'	12'	trib 6'	Min Post Type	Uplift Footing (in)	8'	10'	12'	trib 6.5'	Min Post Type	Uplift Footing (in)	8'	10'	12'	trib 7'	Min Post Type	Uplift Footing (in)	8'	10'	12'	trib 7.5'	Min Post Type	Uplift Footing (in)	8'	10'	12'	trib 8'	Min Post Type	Uplift Footing (in)	8'	10'	12'
On Slab	On Slab	12'-4"	B					11'-4"	B					10'-5"	A1					9'-8"	B					9'-1"	B					8'-6"	B				
0.042"x3"x8"	N30	8'-0"	A1	22	24	25	26	7'-6"	A1	22	23	25	26	7'-2"	A2	22	23	24	26	6'-9"	A2	22	23	24	25	6'-6"	A2	22	22	24	25	6'-3"	A2	22	22	24	25
Double 3"x8"	N25	12'-2"	A2	25	26	28	29	11'-6"	B	25	26	28	29	11'-0"	C	25	26	27	29	10'-6"	C	26	25	27	28	10'-1"	C	26	25	27	28	9'-9"	C	26	25	26	28
Double 2"x6.625"	N25	10'-11"	A2	24	24	26	27	10'-4"	A2	24	24	26	27	9'-11"	A2	24	24	25	26	9'-6"	A2	25	24	25	26	9'-2"	B	25	23	25	26	8'-10"	B	25	23	25	26
5.5" Extruded Fascia	L	8'-11"	A2	22	22	23	25	8'-4"	A2	22	22	23	24	8'-0"	A2	23	22	23	24	7'-6"	A2	23	22	23	24	7'-3"	A2	23	22	23	24	6'-11"	A2	23	22	24	25
California Fascia	N10, G	8'-10"	A2	22	21	22	23	8'-3"	A2	22	21	22	23	7'-11"	A2	23	21	23	24	7'-5"	A2	23	22	23	24	7'-1"	A2	23	22	23	24	6'-10"	A2	23	22	24	25
Alaskan Fascia	K	10'-11"	A2	24	23	25	26	10'-4"	A2	24	23	24	25	9'-11"	A2	24	23	24	25	9'-5"	A2	25	22	24	25	9'-0"	B	25	22	23	25	8'-9"	B	25	22	24	25
Classic Fascia	H	15'-10"	C	27	26	27	29	15'-1"	C	27	26	27	28	14'-7"	D	28	25	27	28	14'-0"	D	28	25	27	28	13'-6"	D	28	25	26	28	13'-2"	D	29	25	26	27
16 G Steel C	N9, T	13'-10"	C	26	27	29	30	12'-11"	C	26	27	28	30	12'-3"	C	26	26	28	29	11'-4"	C	26	26	27	29	10'-8"	C	26	26	27	28	10'-1"	C	26	25	27	28
14 G Steel C	N9, T	16'-8"	C	27	29	30	32	15'-7"	C	28	28	30	31	14'-10"	D	28	28	29	31	13'-11"	D	28	27	29	30	13'-4"	D	28	27	29	30	12'-10"	D	28	27	28	30
12 G Steel C	N9, T	23'-9"	E	31	31	33	35	22'-4"	E	31	31	33	34	21'-4"	E	32	30	32	34	20'-3"	E	32	30	32	33	19'-6"	E	32	30	31	33	18'-9"	E	32	29	31	33
Double 16 G Steel C	N9, N25, T	27'-1"	E	32	32	34	36	25'-9"	E	33	32	34	35	24'-9"	E	33	32	33	35	23'-8"	E	33	31	33	35	22'-11"	E	34	31	33	34	22'-2"	F1	34	31	32	34
Double 14 G Steel C	N9, N25, T	30'-4"	E	34	33	35	37	28'-11"	F1	34	33	35	36	27'-10"	F1	34	33	34	36	26'-8"	F1	35	32	34	36	25'-10"	F1	35	32	34	35	25'-1"	F1	36	32	34	35
Double 12 G Steel C	N9, N25, T	37'-3"	F1	36	35	37	39	35'-5"	F1	36	35	37	38	34'-2"	F1	37	34	36	38	32'-10"	F1	37	34	36	38	31'-10"	F1	38	34	36	37	30'-11"	F2	38	33	35	37
Steel Cloverleaf	W	7'-9"	A1	21	20	22	23	7'-3"	A1	21	21	22	23	6'-11"	A1	22	21	23	24	6'-7"	A2	22	22	23	24	6'-4"	A2	22	22	23	24	6'-1"	A2	22	22	24	25
DBL Steel Cloverleaf	AA	12'-11"	B	25	21	22	23	12'-3"	C	26	21	22	23	11'-10"	C	26	21	23	24	11'-4"	C	26	22	23	24	11'-0"	C	27	22	23	24	10'-8"	C	27	22	24	25
4x3 I Beam	Y	9'-6"	A2	23	21	22	23	8'-10"	A2	23	21	22	23	8'-4"	A2	23	21	23	24	7'-9"	A2	23	22	23	24	7'-5"	A2	23	22	23	24	7'-1"	A2	23	22	24	25
7x4 I Beam	Q	17'-3"	D	28	28	29	31	16'-1"	D	28	27	29	30	15'-3"	D	28	27	29	30	14'-4"	D	28	27	28	29	13'-9"	D	29	26	28	29	13'-2"	D	29	26	28	29

Header	Detail	trib 8.5'	Min Post Type	Uplift Footing (in)	8'	10'	12'	trib 9'	Min Post Type	Uplift Footing (in)	8'	10'	12'	trib 10'	Min Post Type	Uplift Footing (in)	8'	10'	12'	trib 11'	Min Post Type	Uplift Footing (in)	8'	10'	12'	trib 12'	Min Post Type	Uplift Footing (in)	8'	10'	12'
On Slab	On Slab	8'-0"	B					7'-6"	B					6'-9"	B					6'-2"	B					5'-8"	B				
0.042"x3"x8"	N30	5'-11"	A2	23	23	24	25	5'-9"	A2	23	23	24	26	5'-4"	A2	22	24	25	26	4'-11"	A2	23	24	26	27	4'-7"	A2	23	25	26	28
Double 3"x8"	N25	9'-4"	C	26	25	26	27	9'-1"	C	26	24	26	27	8'-6"	C	26	24	25	27	8'-0"	C	27	24	26	27	7'-7"	C	27	25	26	28
Double 2"x6.625"	N25	8'-6"	C	25	23	24	25	8'-3"	C	26	23	24	26	7'-9"	C	25	24	25	26	7'-4"	C	26	24	26	27	6'-11"	C	26	25	26	28
5.5" Extruded Fascia	L	6'-7"	A2	23	23	24	25	6'-4"	A2	23	23	24	26	5'-11"	A2	23	24	25	26	5'-6"	A2	24	24	26	27	5'-1"	A2	24	25	26	28
California Fascia	N10, G	6'-6"	A2	23	23	24	25	6'-3"	A2	23	23	24	26	5'-9"	A2	23	24	25	26	5'-4"	A2	24	24	26	27	5'-0"	A2	23	25	26	28
Alaskan Fascia	K	8'-4"	B	25	23	24	25	8'-1"	C	25	23	24	26	7'-7"	C	25	24	25	26	7'-1"	C	26	24	26	27	6'-8"	C	26	25	26	28
Classic Fascia	H	12'-8"	D	29	25	26	27	12'-5"	D	29	24	26	27	11'-9"	D	29	24	25	27	11'-2"	D	30	24	26	27	10'-8"	E	30	25	26	28
16 G Steel C	N9, T	9'-5"	C	26	25	26	27	8'-11"	C	26	24	26	27	8'-0"	C	26	24	25	26	7'-4"	C	26	24	26	27	6'-8"	C	26	25	26	28
14 G Steel C	N9, T	12'-2"	D	29	26	28	29	11'-9"	D	29	26	28	29	10'-10"	D	28	26	27	28	9'-10"	D	29	25	26	28	9'-0"	D	28	25	26	28
12 G Steel C	N9, T	18'-0"	E	33	29	31	32	17'-5"	E	33	29	31	32	16'-3"	E	33	28	30	31	15'-3"	E	34	28	30	31	14'-4"	F1	33	28	29	30
Double 16 G Steel C	N9, N25, T	21'-4"	F1	34	30	32	34	20'-9"	F1	35	30	32	33	19'-7"	F1	35	30	31	33	18'-6"	F1	36	29	31	33	17'-8"	F1	36	29	31	32
Double 14 G Steel C	N9, N25, T	24'-2"	F1	36	31	33	35	23'-7"	F1	36	31	33	35	22'-3"	F1	36	31	33	34	21'-2"	F1	37	30	32	34	20'-2"	F2	37	30	32	33
Double 12 G Steel C	N9, N25, T	29'-10"	F2	39	33	35	37	29'-1"	F2	39	33	35	36	27'-7"	F2	39	32	34	36	26'-3"	F2	40	32	34	36	25'-1"	F3	40	32	34	35
Steel Cloverleaf	W	5'-10"	A2	22	23	24	25	5'-7"	A2	23	23	24	26	5'-3"	A2	22	24	25	26	4'-10"	A2	23	24	26	27	4'-7"	A2	23	25	26	28
DBL Steel Cloverleaf	AA	10'-4"	C	27	23	24	25	10'-1"	C	27	23	24	26	9'-7"	D	27	24	25	26	9'-1"	D	28	24	26	27	8'-8"	D	28	25	26	28
4x3 I Beam	Y	6'-8"	A2	23	23	24	25	6'-5"	A2	24	23	24	26	5'-10"	A2	23	24	25	26	5'-4"	A2	24	24	26	27	5'-0"	A2	23	25	26	28
7x4 I Beam	Q	12'-6"	D	29	26	27	28	12'-0"	D	29	25	27	28	11'-0"	D	29	25	26	28	10'-2"	D	29	24	26	27	9'-6"	D	29	25	26	28

Header	Detail	trib 13'	Min Post Type	Uplift Footing (in)	8'	10'	12'	trib 14'	Min Post Type	Uplift Footing (in)	8'	10'	12'	trib 15'	Min Post Type	Uplift Footing (in)	8'	10'	12'	trib 16'	Min Post Type	Uplift Footing (in)	8'	10'	12'	trib 17'	Min Post Type	Uplift Footing (in)	8'	10'	12'
On Slab	On Slab	5'-2"	B					4'-10"	B					4'-6"	B					4'-3"	B					4'-0"	B				
0.042"x3"x8"	N30	4'-4"	A2	23	25	27	28	4'-1"	A2	24	26	27	29	3'-10"	A2	24	26	28	29	3'-8"	A2	24	27	28	30	3'-6"	A2	24	27	29	30
Double 3"x8"	N25	7'-2"	C	28	25	27	28	6'-10"	D	28	26	27	29	6'-6"	D	28	26	28	29	6'-3"	D	28	27	28	30	6'-0"	D	28	27	29	30
Double 2"x6.625"	N25	6'-7"	C	27	25	27	28	6'-4"	C	27	26	27	29	6'-0"	C	27	26	28	29	5'-10"	C	28	27	28	30	5'-7"	D	28	27	29	30
5.5" Extruded Fascia	L	4'-10"	A2	24	25	27	28	4'-6"	A2	24	26	27	29	4'-3"	A2	24	26	28	29	4'-1"	A2	25	27	28	30	3'-11"	A2	25	27	29	30
California Fascia	N10, G	4'-8"	A2	24	25	27	28	4'-5"	A2	24	26	27	29	4'-2"	A2	24	26	28	29	4'-0"	A2	24	27	28	30	3'-9"	A2	24	27	29	30
Alaskan Fascia	K	6'-4"	C	27	25	27	28	6'-0"	C	27	26	27	29	5'-9"	C	27	26	28	29	5'-6"	C	27	27	28	30	5'-3"	C	27	27	29	30
Classic Fascia	H	10'-3"	E	31	25	27	28	9'-10"	E	31	26	27	29	9'-5"	E	32	26	28	29	9'-1"	E	32	27	28	30	8'-9"	E	32	27	29	30
16 G Steel C	N9, T	6'-2"	C	26	25	27	28	5'-9"	C	26	26	27	29	5'-4"	C	26	26	28	29	5'-0"	C	26	27	28	30	4'-9"	C	26	27	29	30
14 G Steel C	N9, T	8'-4"	D	29	25	27	28	7'-9"	D	29	26	27	29	7'-2"	D	29	26	28	29	6'-10"	D	29	27	28	30	6'-5"	D	29	27	29	30
12 G Steel C	N9, T	13'-7"	F1	34	27	29	30	12'-11"	F1	34	27	28	30	12'-4"	F1	35	26	28	29	11'-10"	F1	35	27	28	30	11'-4"	F1	35	27	29	30
Double 16 G Steel C	N9, N25, T	16'-10"	F1	37	29	30	32	16'-1"	F1	37	28	30	31	15'-6"	F1	37	28	30	31	14'-11"	F1	38	28	29	31	14'-5"	F2	38	28	29	31
Double 14 G Steel C	N9, N25, T	19'-4"	F2	38	30	31	33	18'-7"	F2	39	29	31	33	17'-11"	F2	39	29	31	32	17'-4"	F2	40	29	31	32	16'-10"	F2	40	29	30	32
Double 12 G Steel C	N9, N25, T	24'-1"	F3	41	31	33	35	23'-2"	F3	42	31	33	34	22'-5"	F3	42	31	33	34	21'-9"	F4	43	31	32	34	21'-1"	F4	43	30	32	34
Steel Cloverleaf	W	4'-4"	A2	23	25	27	28	4'-1"	A2	24	26	27	29	3'-11"	A2	24	26	28	29	3'-9"	A2	24	27	28	30	3'-7"	A2	24	27	29	30
DBL Steel Cloverleaf	AA	8'-4"	D	29	25	27	28	8'-1"	D	29	26	27	29	7'-9"	D	30	26	28	29	7'-7"	D	30	27	28	30	7'-4"	E	30	27	29	30
4x3 I Beam	Y	4'-7"	A2	24	25	27	28	4'-4"	A2	24	26	27	29	4'-1"	A2	24	26	28	29	3'-10"	A2	24	27	28	30	3'-8"	A2	24	27	29	30
7x4 I Beam	Q	8'-10"	D	30	25	27	28	8'-4"	D	30	26	27	29	7'-10"	D	30	26	28	29	7'-6"	D	30	27	28	30	7'-1"	D	30	27	29	30

Ground Snow Load: 0 psf Live Load: 20 psf Roof Design Load 25 psf Wind Speed: 115 MPH EXPOSURE B Seismic Ss= 150% Seismic Design Category D Freestanding or Attached Structures

Table 5.3b (cubic footing "d", Constrained Footing (in), Max Post Length)

Header	Detail	trib 3'	Min Post Type	Uplift Footing (in)	8'	12'	15'	trib 3.5'	Min Post Type	Uplift Footing (in)	8'	12'	15'	trib 4'	Min Post Type	Uplift Footing (in)	8'	12'	15'	trib 4.5'	Min Post Type	Uplift Footing (in)	8'	12'	15'	trib 5'	Min Post Type	Uplift Footing (in)	8'	12'	15'
On Slab	On Slab	11'-10"	A2					10'-2"	A2					8'-11"	A2					7'-11"	A2					7'-1"	A2				
0.042"x3"x8"	N30	9'-4"	A1	19	25	27	29	8'-5"	A1	19	24	27	28	7'-9"	A1	19	24	26	28	7'-3"	A2	19	23	26	27	6'-8"	A2	20	23	25	27
Double 3"x8"	N25	14'-0"	A2	21	27	30	32	12'-9"	A2	22	27	30	31	11'-10"	A2	22	26	29	31	11'-2"	C	22	26	29	30	10'-5"	C	23	25	28	30
Double 2"x6.625"	N25	12'-6"	A2	20	25	28	30	11'-5"	A2	21	25	27	29	10'-8"	A2	21	24	27	29	10'-0"	A2	22	24	27	28	9'-5"	A2	22	24	26	28
5.5" Extruded Fascia	L	10'-6"	A1	19	23	26	27	9'-5"	A2	20	22	25	26	8'-8"	A2	20	22	24	26	8'-1"	A2	20	22	24	25	7'-5"	A2	20	21	23	25
California Fascia	N10, G	10'-6"	A1	19	22	25	26	9'-5"	A2	20	21	24	25	8'-7"	A2	20	21	23	25	8'-0"	A2	20	21	23	24	7'-4"	A2	20	20	22	24
Alaskan Fascia	K	12'-4"	A2	20	24	27	28	11'-6"	A2	21	24	26	28	10'-8"	A2	21	23	26	27	10'-0"	A2	22	23	25	27	9'-4"	A2	22	22	25	26
Classic Fascia	H	14'-3"	A2	21	25	28	30	13'-6"	A2	22	25	28	29	13'-0"	C	23	25	27	29	12'-6"	C	23	24	27	29	12'-1"	C	24	24	27	28
16 G Steel C	N9, T	16'-8"	B	22	29	32	33	14'-9"	C	23	28	31	32	13'-6"	C	23	27	30	32	12'-5"	C	23	26	29	31	11'-2"	C	23	26	29	30
14 G Steel C	N9, T	19'-10"	C	24	30	33	35	17'-8"	C	24	29	32	34	16'-2"	C	24	28	31	33	15'-0"	D	25	28	31	33	13'-10"	D	25	27	30	32
12 G Steel C	N9, T	26'-4"	D	26	32	36	38	25'-0"	D	27	32	35	37	23'-2"	E	28	31	34	36	21'-7"	E	28	30	34	36	20'-1"	E	28	30	33	35
Double 16 G Steel C	N9, N25, T	27'-5"	D	26	32	36	38	26'-1"	E	27	32	35	38	25'-0"	E	28	32	35	37	24'-0"	E	29	31	35	37	23'-3"	E	30	31	34	36
Double 14 G Steel C	N9, N25, T	29'-3"	D	27	33	36	39	27'-10"	E	28	33	36	38	26'-7"	E	29	32	36	38	25'-7"	E	30	32	35	37	24'-9"	F1	30	32	35	37
Double 12 G Steel C	N9, N25, T	33'-3"	E	28	34	38	40	31'-7"	E	29	34	37	39	30'-3"	E	30	33	37	39	29'-2"	F1	31	33	36	39	28'-2"	F1	32	33	36	38
Steel Cloverleaf	W	9'-2"	A1	18	19	21	22	8'-2"	A1	19	19	21	22	7'-7"	A1	19	19	21	22	7'-0"	A1	19	19	21	23	6'-6"	A2	19	20	22	23
DBL Steel Cloverleaf	AA	12'-10"	A2	21	21	23	24	12'-3"	A2	21	21	23	24	11'-8"	A2	22	20	23	24	11'-3"	C	23	20	22	24	10'-11"	C	23	20	22	23
4x3 I Beam	Y	11'-6"	A2	20	22	24	26	10'-2"	A2	20	21	23	25	9'-3"	A2	20	21	23	24	8'-5"	A2	20	20	22	24	7'-8"	A2	21	20	22	23
7x4 I Beam	Q	18'-10"	C	23	28	32	33	17'-11"	C	24	28	31	33	16'-9"	D	25	28	31	32	15'-6"	D	25	27	30	32	14'-2"	D	25	27	29	31

Header	Detail	trib 5.5'	Min Post Type	Uplift Footing (in)	8'	12'	15'	trib 6'	Min Post Type	Uplift Footing (in)	8'	12'	15'	trib 6.5'	Min Post Type	Uplift Footing (in)	8'	12'	15'	trib 7'	Min Post Type	Uplift Footing (in)	8'	12'	15'	trib 7.5'	Min Post Type	Uplift Footing (in)	8'	12'	15'
On Slab	On Slab	6'-5"	A2					5'-11"	A2					5'-5"	A2					5'-1"	A2					4'-9"	A2				
0.042"x3"x8"	N30	6'-4"	A2	20	22	25	26	5'-11"	A2	20	22	24	26	5'-7"	A2	20	22	24	25	5'-4"	A2	20	22	24	25	5'-1"	A2	20	22	24	26
Double 3"x8"	N25	9'-10"	C	23	25	28	29	9'-4"	C	23	25	27	29	8'-11"	C	24	24	27	29	8'-6"	C	24	24	27	28	8'-2"	C	24	24	26	28
Double 2"x6.625"	N25	8'-11"	B	22	23	26	27	8'-6"	C	23	23	25	27	8'-1"	C	23	23	25	27	7'-9"	C	23	22	25	26	7'-5"	C	23	22	25	26
5.5" Extruded Fascia	L	7'-0"	A2	21	21	23	24	6'-7"	A2	21	21	23	24	6'-2"	A2	21	21	24	25	5'-11"	A2	21	22	24	25	5'-7"	A2	21	22	24	26
California Fascia	N10, G	6'-11"	A2	20	20	23	24	6'-6"	A2	21	21	23	24	6'-1"	A2	21	21	24	25	5'-9"	A2	21	22	24	25	5'-6"	A2	21	22	24	26
Alaskan Fascia	K	8'-10"	B	22	22	24	26	8'-4"	C	22	22	24	25	7'-11"	C	23	21	24	25	7'-7"	C	23	22	24	25	7'-3"	C	23	22	24	26
Classic Fascia	H	11'-8"	C	24	24	27	28	11'-4"	D	25	24	26	28	11'-1"	D	25	24	26	28	10'-9"	D	26	24	26	28	10'-7"	D	26	23	26	27
16 G Steel C	N9, T	10'-3"	C	23	25	28	30	9'-5"	C	23	25	27	29	8'-7"	C	23	24	27	28	8'-0"	C	23	24	26	28	7'-6"	C	23	23	26	27
14 G Steel C	N9, T	12'-11"	D	25	27	30	31	12'-2"	D	25	26	29	31	11'-5"	D	26	26	29	30	10'-10"	D	26	26	28	30	10'-2"	D	26	25	28	30
12 G Steel C	N9, T	19'-0"	E	29	30	33	35	18'-0"	E	29	29	32	34	17'-0"	E	29	29	32	34	16'-3"	E	29	28	31	33	15'-7"	E	30	28	31	33
Double 16 G Steel C	N9, N25, T	22'-4"	F1	30	31	34	36	21'-4"	F1	31	30	34	36	20'-4"	F1	31	30	33	35	19'-7"	F1	31	30	33	35	18'-10"	F1	32	29	33	35
Double 14 G Steel C	N9, N25, T	24'-0"	F1	31	31	35	37	23'-4"	F1	32	31	34	36	22'-9"	F1	32	31	34	36	22'-2"	F1	33	31	34	36	21'-6"	F1	33	30	34	36
Double 12 G Steel C	N9, N25, T	27'-3"	F1	32	32	36	38	26'-6"	F1	33	32	36	38	25'-10"	F1	34	32	35	37	25'-2"	F2	34	32	35	37	24'-8"	F2	35	32	35	37
Steel Cloverleaf	W	6'-2"	A2	20	20	23	24	5'-10"	A2	20	21	23	24	5'-6"	A2	20	21	24	25	5'-3"	A2	20	22	24	25	5'-0"	A2	20	22	24	26
DBL Steel Cloverleaf	AA	10'-7"	C	24	20	23	24	10'-3"	C	24	21	23	24	9'-11"	C	24	21	24	25	9'-7"	D	25	22	24	25	9'-3"	D	25	22	24	26
4x3 I Beam	Y	7'-2"	A2	21	20	23	24	6'-8"	A2	21	21	23	24	6'-2"	A2	21	21	24	25	5'-10"	A2	21	22	24	25	5'-6"	A2	21	22	24	26
7x4 I Beam	Q	13'-3"	D	25	26	29	31	12'-6"	D	26	26	28	30	11'-8"	D	26	25	28	30	11'-0"	D	26	25	28	29	10'-5"	D	26	25	27	29

Header	Detail	trib 8'	Min Post Type	Uplift Footing (in)	8'	12'	15'	trib 8.5'	Min Post Type	Uplift Footing (in)	8'	12'	15'	trib 9'	Min Post Type	Uplift Footing (in)	8'	12'	15'	trib 9.5'	Min Post Type	Uplift Footing (in)	8'	12'	15'	trib 10'	Min Post Type	Uplift Footing (in)	8'	12'	15'
On Slab	On Slab	4'-5"	A2					4'-2"	A2					3'-11"	A2					3'-9"	A2					3'-6"	A2				
0.042"x3"x8"	N30	4'-10"	A2	21	22	25	26	4'-7"	A2	21	23	25	27	4'-5"	A2	21	23	26	27	4'-3"	A2	21	23	26	28	4'-0"	A2	21	24	26	28
Double 3"x8"	N25	7'-10"	C	24	24	26	28	7'-6"	C	24	23	26	27	7'-3"	C	25	23	26	27	7'-0"	D	25	23	26	28	6'-9"	D	25	24	26	28
Double 2"x6.625"	N25	7'-2"	C	24	22	25	26	6'-11"	C	24	23	25	27	6'-8"	C	24	23	26	27	6'-6"	C	24	23	26	28	6'-3"	C	24	24	26	28
5.5" Extruded Fascia	L	5'-4"	A2	21	22	25	26	5'-1"	A2	21	23	25	27	4'-10"	A2	22	23	26	27	4'-8"	A2	22	23	26	28	4'-6"	A2	22	24	26	28
California Fascia	N10, G	5'-3"	A2	21	22	25	26	5'-0"	A2	21	23	25	27	4'-9"	A2	21	23	26	27	4'-7"	A2	21	23	26	28	4'-4"	A2	21	24	26	28
Alaskan Fascia	K	6'-11"	C	23	22	25	26	6'-8"	C	23	23	25	27	6'-5"	C	24	23	26	27	6'-2"	C	24	23	26	28	5'-11"	C	24	24	26	28
Classic Fascia	H	10'-4"	D	27	23	26	27	10'-1"	D	27	23	26	27	9'-11"	E	27	23	26	27	9'-9"	E	28	23	26	28	9'-7"	E	28	24	26	28
16 G Steel C	N9, T	7'-1"	C	23	23	25	27	6'-7"	C	23	23	25	27	6'-3"	C	23	23	26	27	5'-11"	C	23	23	26	28	5'-7"	C	23	24	26	28
14 G Steel C	N9, T	9'-7"	D	26	25	28	29	8'-11"	D	26	24	27	29	8'-6"	D	26	24	27	28	8'-1"	D	26	24	26	28	7'-7"	D	26	24	26	28
12 G Steel C	N9, T	14'-11"	E	30	28	31	33	14'-3"	F1	30	27	30	32	13'-9"	F1	30	27	30	32	13'-4"	F1	31	27	30	32	12'-9"	F1	31	27	30	31
Double 16 G Steel C	N9, N25, T	18'-3"	F1	32	29	32	34	17'-6"	F1	32	29	32	34	17'-0"	F1	33	29	32	34	16'-6"	F1	33	28	32	33	16'-0"	F1	33	28	31	33
Double 14 G Steel C	N9, N25, T	20'-10"	F1	34	30	34	35	20'-1"	F2	34	30	33	35	19'-6"	F2	34	30	33	35	19'-0"	F2	34	30	33	35	18'-5"	F2	35	29	32	34
Double 12 G Steel C	N9, N25, T	24'-1"	F2	35	31	35	37	23'-8"	F2	36	31	35	37	23'-2"	F3	36	31	34	36	22'-9"	F3	37	31	34	36	22'-5"	F3	37	31	34	36
Steel Cloverleaf	W	4'-9"	A2	21	22	25	26	4'-7"	A2	21	23	25	27	4'-5"	A2	21	23	26	27	4'-3"	A2	21	23	26	28	4'-1"	A2	21	24	26	28
DBL Steel Cloverleaf	AA	9'-0"	D	25	22	25	26	8'-8"	D	26	23	25	27	8'-5"	D	26	23	26	27	8'-3"	D	26	23	26	28	8'-0"	D	26	24	26	28
4x3 I Beam	Y	5'-3"	A2	21	22	25	26	4'-11"	A2	21	23	25	27	4'-8"	A2	21	23	26	27	4'-6"	A2	21	23	26	28	4'-3"	A2	21	24	26	28
7x4 I Beam	Q	9'-11"	D	26	24	27	28	9'-5"	D	26	24	26	28	9'-0"	D	26	24	26	28	8'-7"	D	26	23	26	28	8'-2"	D	26	24	26	28

Header	Detail	trib 11'	Min Post Type	Uplift Footing (in)	8'	12'	15'	trib 12'	Min Post Type	Uplift Footing (in)	8'	12'	15'	trib 13'	Min Post Type	Uplift Footing (in)	8'	12'	15'	trib 14'	Min Post Type	Uplift Footing (in)	8'	12'	15'	trib 15'	Min Post Type	Uplift Footing (in)	8'	12'	15'
On Slab	On Slab	3'-2"	A2					2'-11"	A2					2'-8"	A2					2'-6"	A2					2'-4"	A2				
0.042"x3"x8"	N30	3'-9"	A2	21	24	27	29	3'-6"	A2	21	25	28	29	3'-3"	A2	21	25	28	30	3'-1"	A2	21	26	29	30	2'-10"	A2	21	26	29	31
Double 3"x8"	N25	6'-4"	D	25	24	27	29	5'-11"	D	25	25	28	29	5'-7"	D	25	25	28	30	5'-4"	D	26	26	29	30	5'-1"	D	26	26	29	31
Double 2"x6.625"	N25	5'-11"	C	24	24	27	29	5'-7"	D	25	25	28	29	5'-3"	D	25	25	28	30	5'-0"	D	25	26	29	30	4'-9"	D	25	26	29	31
5.5" Extruded Fascia	L	4'-2"	A2	22	24	27	29	3'-11"	A2	22	25	28	29	3'-7"	A2	22	25	28	30	3'-5"	B	22	26	29	30	3'-3"	B	22	26	29	31
California Fascia	N10, G	4'-1"	A2	22	24	27	29	3'-9"	A2	22	25	28	29	3'-6"	A2	22	25	28	30	3'-4"	A2	22	26	29	30	3'-1"	A2	22	26	29	31
Alaskan Fascia	K	5'-7"	C	24	24	27	29	5'-3"	C	24	25	28	29	4'-11"	C	24	25	28	30	4'-8"	D	25	26	29	30	4'-6"	D	25	26	29	31
Classic Fascia	H	9'-2"	E	28	24	27	29	8'-8"	E	29	25	28	29	8'-3"	E	29	25	28	30	7'-11"	E	29	26	29	30	7'-6"	E	29	26	29	31
16 G Steel C	N9, T	5'-2"	C	23	24	27	29	4'-8"	C	23	25	28	29	4'-4"	C	23	25	28	30	4'-0"	C	23	26	29	30	3'-9"	C	23	26	29	31
14 G Steel C	N9, T	6'-11"	D	26	24	27	29	6'-4"	D	26	25	28	29	5'-10"	D	26	25	28	30	5'-5"	D	26	26	29	30	5'-1"	D	26	26	29	31
12 G Steel C	N9, T	12'-0"	F1	31	26	29	31	11'-4"	F1	31	26	29	30	10'-8"	F1	32	25	28	30	10'-2"	F1	32	26	29	30	9'-8"	F1	32	26	29	31
Double 16 G Steel C	N9, N25, T	15'-2"	F1	34	28	31	33	14'-4"	F2	34	28	30	32	13'-8"	F2	34	27	30	32	13'-1"	F2	35	27	30	32	12'-6"	F2	35	27	29	31
Double 14 G Steel C	N9, N25, T	17'-7"	F2	35	29	32	34	16'-9"	F2	36	29	32	34	16'-0"	F3	36	28	31	33	15'-5"	F3	37	28	31	33	14'-10"	F3	37	28	31	33
Double 12 G Steel C	N9, N25, T	21'-8"	F3	38	31	34	36	21'-0"	F4	38	30	34	36	20'-2"	F4	39	30	33	35	19'-5"	F4	39	30	33	35	18'-9"	F4	40	29	33	35
Steel Cloverleaf	W	3'-10"	A2	21	24	27	29	3'-7"	A2	21	25	28	29	3'-4"	A2	21	25	28	30	3'-2"	A2	22	26	29	30	3'-0"	A2	22	26	29	31
DBL Steel Cloverleaf	AA	7'-8"	D	27	24	27	29	7'-4"	E	27	25	28	29	7'-0"	E	27	25	28	30	6'-9"	E	28	26	29	30	6'-6"	E	28	26	29	31
4x3 I Beam	Y	3'-11"	A2	21	24	27	29	3'-7"	A2	21	25	28	29	3'-4"	A2	21	25	28	30	3'-2"	A2	22	26	29	30	2'-11"	A2	22	26	29	31
7x4 I Beam	Q	7'-7"	D	27	24	27	29	7'-0"	D	27	25	28	29	6'-6"	D	27	25	28	30	6'-2"	D	27	26	29	30	5'-9"	D	27	26	29	31

Amerimax Exterior Home Products
28921 US Hwy 74
Romoland, CA 92585

Carl Putnam, P. E.
3441 Ivylink Place
Lynchburg, VA 24503
(434) 384-2514
carlputnam@comcast.net

PROFESSIONAL ENGINEER
CARL PUTNAM
C 68139
EXP. 6/30/2019
CIVIL
STATE OF CALIFORNIA

Ground Snow Load: 0 psf   Live Load: 10 psf   Roof Design Load 21 psf   Wind Speed: 115 MPH EXPOSURE C or 130 MPH EXPOSURE B   Seismic Ss= 150%   Seismic Design Category D   Freestanding or Attached Structures

Table 5.4a

cubic footing "d" Constrained Footing (in) Max Post Length

Header	Detail	trib 3'	Min Post Type	Uplift Footing (in)	8'	10'	12'	trib 3.5'	Min Post Type	Uplift Footing (in)	8'	10'	12'	trib 4'	Min Post Type	Uplift Footing (in)	8'	10'	12'	trib 4.5'	Min Post Type	Uplift Footing (in)	8'	10'	12'	trib 5'	Min Post Type	Uplift Footing (in)	8'	10'	12'
On Slab	On Slab	22'-8"	C					19'-5"	C					17'-0"	C					15'-1"	C					13'-7"	C				
0.042"x3"x8"	N30	10'-2"	A1	21	27	29	30	9'-4"	A1	22	27	28	30	8'-8"	A1	22	26	28	29	8'-0"	A1	23	26	27	29	7'-6"	A1	23	25	27	28
Double 3"x8"	N25	15'-2"	A2	24	30	32	34	14'-0"	A2	25	30	32	33	13'-1"	A2	26	29	31	32	12'-2"	A2	26	29	30	32	11'-6"	B	26	28	30	31
Double 2"x6.625"	N25	13'-6"	A2	24	28	30	31	12'-6"	A2	24	28	29	31	11'-9"	A2	25	27	29	30	10'-11"	A2	25	27	28	30	10'-4"	A2	26	26	28	29
5.5" Extruded Fascia	L	11'-6"	A1	22	26	27	29	10'-6"	A1	23	25	27	28	9'-9"	A2	23	25	26	27	8'-11"	A2	23	24	26	27	8'-4"	A2	24	24	25	26
California Fascia	N10, G	11'-6"	A1	22	25	26	27	10'-6"	A1	23	24	26	27	9'-8"	A2	23	24	25	26	8'-10"	A2	23	23	24	26	8'-3"	A2	24	23	24	25
Alaskan Fascia	K	13'-9"	A2	24	27	28	30	12'-8"	A2	24	26	28	29	11'-10"	A2	25	26	27	29	10'-11"	A2	25	25	27	28	10'-4"	A2	25	25	26	28
Classic Fascia	H	18'-8"	A2	26	29	31	33	17'-7"	C	27	29	31	32	16'-10"	C	28	29	30	32	15'-10"	C	28	28	30	31	15'-1"	C	29	28	30	31
16 G Steel C	N9, T	18'-4"	A2	26	32	34	35	16'-8"	B	27	31	33	34	15'-3"	C	27	30	32	34	13'-10"	C	27	30	31	33	12'-11"	C	27	29	31	32
14 G Steel C	N9, T	21'-9"	C	28	33	35	37	19'-10"	C	28	32	34	36	18'-2"	C	29	32	34	35	16'-8"	C	29	31	33	34	15'-7"	D	29	31	32	34
12 G Steel C	N9, T	30'-2"	D	31	36	38	40	27'-9"	D	31	35	37	39	25'-9"	D	32	35	37	38	23'-9"	E	32	34	36	38	22'-4"	E	33	34	35	37
Double 16 G Steel C	N9, N25, T	33'-4"	D	32	37	39	41	31'-0"	E	33	36	39	40	29'-0"	E	33	36	38	40	27'-1"	E	34	35	37	39	25'-9"	E	35	35	37	38
Double 14 G Steel C	N9, N25, T	37'-2"	E	33	38	40	42	34'-7"	E	34	37	40	41	32'-6"	E	35	37	39	41	30'-4"	E	35	36	38	40	28'-11"	F1	36	36	38	40
Double 12 G Steel C	N9, N25, T	40'-0"	E	34	39	41	43	40'-0"	E	36	39	41	43	39'-9"	F1	37	39	41	43	37'-3"	F1	38	38	40	42	35'-5"	F1	38	38	40	42
Steel Cloverleaf	W	10'-0"	A1	21	21	23	24	9'-2"	A1	22	21	22	23	8'-5"	A1	22	20	22	23	7'-9"	A1	22	21	22	23	7'-3"	A1	23	22	23	24
DBL Steel Cloverleaf	AA	15'-9"	A2	25	24	25	26	14'-8"	A2	25	23	25	26	13'-9"	A2	26	23	24	26	12'-11"	B	27	23	24	25	12'-3"	C	27	22	24	25
4x3 I Beam	Y	12'-9"	A2	23	24	26	27	11'-6"	A2	23	24	25	26	10'-6"	A2	24	23	25	26	9'-6"	A2	24	23	24	25	8'-10"	A2	24	22	23	25
7x4 I Beam	Q	18'-11"	B	26	31	33	34	18'-1"	C	27	31	32	34	17'-6"	C	28	30	32	34	17'-1"	C	29	30	32	34	16'-1"	D	30	30	32	33

Header	Detail	trib 5.5'	Min Post Type	Uplift Footing (in)	8'	10'	12'	trib 6'	Min Post Type	Uplift Footing (in)	8'	10'	12'	trib 6.5'	Min Post Type	Uplift Footing (in)	8'	10'	12'	trib 7'	Min Post Type	Uplift Footing (in)	8'	10'	12'	trib 7.5'	Min Post Type	Uplift Footing (in)	8'	10'	12'	trib 8'	Min Post Type	Uplift Footing (in)	8'	10'	12'
On Slab	On Slab	12'-4"	C					11'-4"	C					10'-5"	A1					9'-8"	C					9'-1"	C					8'-6"	C				
0.042"x3"x8"	N30	7'-1"	A2	23	25	27	28	6'-8"	A2	23	25	26	27	6'-4"	A2	24	24	26	27	5'-11"	A2	24	24	25	27	5'-8"	A2	24	24	25	27	5'-5"	A2	24	24	26	27
Double 3"x8"	N25	10'-11"	C	27	28	30	31	10'-4"	C	27	28	29	31	9'-10"	C	27	27	29	30	9'-4"	C	28	27	28	30	9'-0"	C	28	27	28	30	8'-8"	C	28	26	28	29
Double 2"x6.625"	N25	9'-10"	A2	26	26	27	29	9'-4"	A2	26	26	27	28	8'-11"	B	27	25	27	28	8'-6"	C	27	25	26	28	8'-2"	C	27	25	26	27	7'-11"	C	27	25	26	27
5.5" Extruded Fascia	L	7'-11"	A2	24	23	25	26	7'-4"	A2	24	23	24	25	7'-0"	A2	24	23	25	26	6'-7"	A2	25	24	25	26	6'-4"	A2	25	24	25	27	6'-0"	A2	25	24	26	27
California Fascia	N10, G	7'-9"	A2	24	22	24	25	7'-3"	A2	24	23	24	25	6'-11"	A2	24	23	25	26	6'-6"	A2	24	24	25	26	6'-2"	A2	25	24	25	27	5'-11"	A2	25	24	26	27
Alaskan Fascia	K	9'-9"	A2	26	25	26	27	9'-3"	A2	26	24	26	27	8'-10"	B	26	24	25	27	8'-4"	B	27	24	25	26	8'-0"	C	27	24	25	27	7'-9"	C	27	24	26	27
Classic Fascia	H	14'-5"	D	29	28	29	31	13'-9"	D	30	27	29	30	13'-3"	D	30	27	29	30	12'-8"	D	31	27	28	30	12'-4"	D	31	26	28	29	11'-11"	D	31	26	28	29
16 G Steel C	N9, T	12'-1"	C	28	29	30	32	11'-0"	C	28	28	30	31	10'-3"	C	28	27	29	30	9'-5"	C	28	27	28	30	8'-10"	C	28	26	28	29	8'-4"	C	28	26	28	29
14 G Steel C	N9, T	14'-7"	D	30	30	32	33	13'-8"	D	30	30	31	33	12'-11"	D	30	29	31	32	12'-2"	D	30	29	30	32	11'-8"	D	30	28	30	31	11'-1"	D	31	28	30	31
12 G Steel C	N9, T	21'-2"	E	33	33	35	37	19'-11"	E	34	33	34	36	19'-0"	E	34	32	34	36	18'-0"	E	34	32	34	35	17'-3"	E	35	31	33	35	16'-7"	E	35	31	33	34
Double 16 G Steel C	N9, N25, T	24'-6"	E	35	34	36	38	23'-3"	E	35	34	36	38	22'-4"	F1	36	34	35	37	21'-4"	F1	36	33	35	37	20'-7"	F1	37	33	35	36	19'-11"	F1	37	33	34	36
Double 14 G Steel C	N9, N25, T	27'-7"	F1	36	35	37	39	26'-3"	F1	37	35	37	39	25'-3"	F1	37	35	37	38	24'-2"	F1	38	34	36	38	23'-5"	F1	38	34	36	38	22'-8"	F1	39	34	36	37
Double 12 G Steel C	N9, N25, T	33'-11"	F1	39	37	39	41	32'-3"	F1	40	37	39	41	31'-1"	F2	40	36	39	40	29'-10"	F2	41	36	38	40	28'-11"	F2	41	36	38	40	28'-0"	F2	42	35	38	39
Steel Cloverleaf	W	6'-11"	A1	23	22	24	25	6'-5"	A2	23	23	24	25	6'-2"	A2	23	23	25	26	5'-10"	A2	24	24	25	26	5'-7"	A2	24	24	25	27	5'-4"	A2	24	24	26	27
DBL Steel Cloverleaf	AA	11'-9"	C	27	22	24	25	11'-2"	C	28	23	24	25	10'-9"	C	28	23	25	26	10'-4"	C	29	24	25	26	10'-0"	C	29	24	25	27	9'-9"	D	29	24	26	27
4x3 I Beam	Y	8'-3"	A2	24	22	24	25	7'-7"	A2	24	23	24	25	7'-2"	A2	25	23	25	26	6'-8"	A2	25	24	25	26	6'-4"	A2	25	24	25	27	6'-0"	A2	25	24	26	27
7x4 I Beam	Q	15'-1"	D	30	29	31	33	14'-0"	D	30	29	30	32	13'-3"	D	30	28	30	31	12'-6"	D	30	28	30	31	11'-10"	D	31	28	29	31	11'-4"	D	31	27	29	30

Footing (in) Max Post Length

Header	Detail	trib 8.5'	Min Post Type	Uplift Footing (in)	8'	10'	12'	trib 9'	Min Post Type	Uplift Footing (in)	8'	10'	12'	trib 10'	Min Post Type	Uplift Footing (in)	8'	10'	12'	trib 11'	Min Post Type	Uplift Footing (in)	8'	10'	12'	trib 12'	Min Post Type	Uplift Footing (in)	8'	10'	12'
On Slab	On Slab	8'-0"	C					7'-6"	C					6'-9"	C					6'-2"	C					5'-8"	C				
0.042"x3"x8"	N30	5'-2"	A2	24	25	26	28	5'-0"	A2	24	25	27	28	4'-7"	A2	21	26	27	29	4'-3"	A2	25	27	28	29	4'-0"	A2	22	27	29	30
Double 3"x8"	N25	8'-4"	C	28	26	28	29	8'-1"	C	29	26	27	29	7'-6"	C	25	26	27	29	7'-1"	D	29	27	28	29	6'-8"	D	26	27	29	30
Double 2"x6.625"	N25	7'-7"	C	27	25	26	28	7'-4"	C	28	25	27	28	6'-11"	C	24	26	27	29	6'-6"	C	28	27	28	29	6'-2"	C	25	27	29	30
5.5" Extruded Fascia	L	5'-9"	A2	25	25	26	28	5'-6"	A2	25	25	27	28	5'-1"	A2	22	26	27	29	4'-9"	A2	26	27	28	29	4'-5"	A2	22	27	29	30
California Fascia	N10, G	5'-8"	A2	25	25	26	28	5'-5"	A2	25	25	27	28	5'-0"	A2	22	26	27	29	4'-8"	A2	25	27	28	29	4'-4"	A2	22	27	29	30
Alaskan Fascia	K	7'-5"	C	27	25	26	28	7'-2"	C	27	25	27	28	6'-8"	C	24	26	27	29	6'-3"	C	28	27	28	29	5'-11"	C	25	27	29	30
Classic Fascia	H	11'-7"	D	32	26	28	29	11'-3"	D	32	26	27	29	10'-8"	E	28	26	27	29	10'-2"	E	33	27	28	29	9'-7"	E	29	27	29	30
16 G Steel C	N9, T	7'-9"	C	28	26	27	28	7'-4"	C	28	25	27	28	6'-7"	C	24	26	27	29	6'-1"	C	28	27	28	29	5'-6"	C	24	27	29	30
14 G Steel C	N9, T	10'-6"	D	31	28	29	31	10'-0"	D	31	27	29	30	8'-11"	D	27	27	28	29	8'-2"	D	31	27	28	29	7'-6"	D	27	27	29	30
12 G Steel C	N9, T	15'-11"	E	35	31	33	34	15'-4"	E	35	30	32	34	14'-3"	F1	31	30	32	33	13'-5"	F1	36	29	31	33	12'-8"	F1	32	29	31	32
Double 16 G Steel C	N9, N25, T	19'-2"	F1	37	32	34	36	18'-8"	F1	38	32	34	35	17'-6"	F1	33	32	33	35	16'-8"	F1	39	31	33	34	15'-10"	F1	34	31	32	34
Double 14 G Steel C	N9, N25, T	21'-11"	F1	39	33	35	37	21'-3"	F1	39	33	35	37	20'-1"	F2	35	33	35	36	19'-2"	F2	41	32	34	36	18'-3"	F2	36	32	34	35
Double 12 G Steel C	N9, N25, T	27'-1"	F2	42	35	37	39	26'-5"	F2	42	35	37	39	25'-0"	F3	38	34	36	38	23'-11"	F3	44	34	36	38	22'-10"	F3	39	34	36	37
Steel Cloverleaf	W	5'-1"	A2	24	25	26	28	4'-11"	A2	24	25	27	28	4'-7"	A2	21	26	27	29	4'-3"	A2	25	27	28	29	4'-0"	A2	22	27	29	30
DBL Steel Cloverleaf	AA	9'-5"	D	29	25	26	28	9'-2"	D	30	25	27	28	8'-8"	D	26	26	27	29	8'-3"	D	31	27	28	29	7'-11"	D	27	27	29	30
4x3 I Beam	Y	5'-8"	A2	25	25	26	28	5'-5"	A2	25	25	27	28	4'-11"	A2	22	26	27	29	4'-7"	A2	25	27	28	29	4'-2"	A2	22	27	29	30
7x4 I Beam	Q	10'-9"	D	31	27	28	30	10'-3"	D	31	27	28	29	9'-5"	D	27	26	28	29	8'-9"	D	31	27	28	29	8'-1"	D	27	27	29	30

Header	Detail	trib 13'	Min Post Type	Uplift Footing (in)	8'	10'	12'	trib 14'	Min Post Type	Uplift Footing (in)	8'	10'	12'	trib 15'	Min Post Type	Uplift Footing (in)	8'	10'	12'	trib 16'	Min Post Type	Uplift Footing (in)	8'	10'	12'	trib 17'	Min Post Type	Uplift Footing (in)	8'	10'	12'
On Slab	On Slab	5'-2"	C					4'-10"	C					4'-6"	C					4'-3"	C					4'-0"	C				
0.042"x3"x8"	N30	3'-9"	A2	25	28	29	31	3'-6"	A2	25	28	30	31	3'-4"	A2	25	29	30	32	3'-2"	A2	25	29	31	32	3'-0"	A2	25	30	31	33
Double 3"x8"	N25	6'-4"	D	30	28	29	31	6'-0"	D	30	28	30	31	5'-8"	D	30	29	30	32	5'-5"	D	30	29	31	32	5'-2"	D	31	30	31	33
Double 2"x6.625"	N25	5'-10"	C	29	28	29	31	5'-7"	D	29	28	30	31	5'-4"	D	30	29	30	32	5'-1"	D	30	29	31	32	4'-11"	D	30	30	31	33
5.5" Extruded Fascia	L	4'-2"	A2	26	28	29	31	3'-11"	A2	26	28	30	31	3'-8"	A2	26	29	30	32	3'-6"	B	26	29	31	32	3'-4"	B	26	30	31	33
California Fascia	N10, G	4'-0"	A2	26	28	29	31	3'-9"	A2	26	28	30	31	3'-7"	A2	26	29	30	32	3'-5"	A2	26	29	31	32	3'-3"	A2	26	30	31	33
Alaskan Fascia	K	5'-7"	C	29	28	29	31	5'-3"	C	29	28	30	31	5'-0"	C	29	29	30	32	4'-10"	C	29	29	31	32	4'-7"	D	29	30	31	33
Classic Fascia	H	9'-2"	E	34	28	29	31	8'-9"	E	34	28	30	31	8'-4"	E	34	29	30	32	8'-0"	E	35	29	31	32	7'-9"	E	35	30	31	33
16 G Steel C	N9, T	5'-1"	C	28	28	29	31	4'-9"	C	28	28	30	31	4'-5"	C	28	29	30	32	4'-2"	C	28	29	31	32	3'-11"	C	28	30	31	33
14 G Steel C	N9, T	6'-11"	D	31	28	29	31	6'-5"	D	31	28	30	31	6'-0"	D	31	29	30	32	5'-7"	D	31	29	31	32	5'-3"	D	31	30	31	33
12 G Steel C	N9, T	12'-0"	F1	37	29	30	32	11'-4"	F1	37	28	30	31	10'-10"	F1	37	29	30	32	10'-4"	F1	38	29	31	32	9'-11"	F1	38	30	31	33
Double 16 G Steel C	N9, N25, T	15'-1"	F1	40	30	32	34	14'-5"	F2	40	30	32	33	13'-10"	F2	41	30	31	33	13'-4"	F2	41	29	31	33	12'-10"	F2	41	30	31	33
Double 14 G Steel C	N9, N25, T	17'-6"	F2	42	31	33	35	16'-10"	F2	42	31	33	35	16'-3"	F3	43	31	33	34	15'-8"	F3	43	31	32	34	15'-1"	F3	44	30	32	34
Double 12 G Steel C	N9, N25, T	21'-11"	F3	45	33	35	37	21'-1"	F4	46	33	35	37	20'-5"	F4	46	33	35	36	19'-9"	F4	47	32	34	36	19'-1"	F4	47	32	34	36
Steel Cloverleaf	W	3'-9"	A2	25	28	29	31	3'-7"	A2	25	28	30	31	3'-5"	A2	25	29	30	32	3'-3"	A2	26	29	31	32	3'-1"	A2	26	30	31	33
DBL Steel Cloverleaf	AA	7'-7"	D	32	28	29	31	7'-4"	D	32	28	30	31	7'-1"	E	32	29	30	32	6'-10"	E	33	29	31	32	6'-8"	E	33	30	31	33
4x3 I Beam	Y	3'-11"	A2	25	28	29	31	3'-8"	A2	25	28	30	31	3'-5"	A2	26	29	30	32	3'-3"	A2	26	29	31	32	3'-0"	A2	26	30	31	33
7x4 I Beam	Q	7'-7"	D	32	28	29	31	7'-1"	D	32	28	30	31	6'-8"	D	32	29	30	32	6'-4"	D	32	29	31	32	6'-0"	D	32	30	31	33

Ground Snow Load: 0 psf   Live Load: 20 psf   Roof Design Load 29 psf   Wind Speed: 115 MPH EXPOSURE C or 130 MPH EXPOSURE B   Seismic Ss= 150%   Seismic Design Category D   Freestanding or Attached Structures

Table 5.4b

cubic footing "d" Constrained Footing (in) Max Post Length

Header	Detail	trib 3'	Min Post Type	Uplift Footing (in)	8'	12'	15'	trib 3.5'	Min Post Type	Uplift Footing (in)	8'	12'	15'	trib 4'	Min Post Type	Uplift Footing (in)	8'	12'	15'	trib 4.5'	Min Post Type	Uplift Footing (in)	8'	12'	15'	trib 5'	Min Post Type	Uplift Footing (in)	8'	12'	15'
On Slab	On Slab	11'-10"	A2					10'-2"	A2					8'-11"	A2					7'-11"	A2					7'-1"	A2				
0.042"x3"x8"	N30	8'-7"	A1	20	26	29	31	7'-9"	A1	21	26	28	30	7'-2"	A2	21	25	28	29	6'-7"	A2	21	25	27	29	6'-1"	A2	21	24	27	28
Double 3"x8"	N25	12'-11"	A2	23	29	32	34	11'-10"	B	24	29	32	33	11'-0"	C	24	28	31	33	10'-2"	C	25	27	30	32	9'-7"	C	25	27	30	32
Double 2"x6.625"	N25	11'-7"	A2	22	27	30	32	10'-8"	A2	23	26	29	31	9'-11"	A2	23	26	29	31	9'-3"	B	24	26	28	30	8'-8"	B	24	25	28	30
5.5" Extruded Fascia	L	9'-7"	A2	21	25	27	29	8'-8"	A2	21	24	27	28	8'-0"	A2	22	23	26	28	7'-3"	A2	22	23	25	27	6'-9"	A2	22	23	25	26
California Fascia	N10, G	9'-6"	A2	21	24	26	28	8'-7"	A2	21	23	25	27	7'-11"	A2	22	22	25	26	7'-2"	A2	22	22	24	26	6'-8"	A2	22	22	24	25
Alaskan Fascia	K	11'-8"	A2	22	26	29	30	10'-8"	A2	23	25	28	30	9'-11"	A2	23	25	27	29	9'-1"	A2	24	24	27	28	8'-7"	B	24	24	26	28
Classic Fascia	H	14'-3"	B	24	27	30	32	13'-6"	C	25	27	30	32	13'-0"	C	26	27	30	31	12'-6"	C	26	27	29	31	12'-1"	D	27	26	29	31
16 G Steel C	N9, T	15'-0"	C	24	30	34	36	13'-6"	C	25	29	33	35	12'-3"	C	25	29	32	34	10'-10"	C	25	28	31	33	9'-10"	C	25	27	30	32
14 G Steel C	N9, T	17'-11"	C	26	32	35	37	16'-2"	C	26	31	34	36	14'-10"	D	27	30	33	35	13'-6"	D	27	29	33	35	12'-7"	D	27	29	32	34
12 G Steel C	N9, T	25'-4"	D	29	35	38	41	23'-2"	E	30	34	37	40	21'-4"	E	30	33	37	39	19'-8"	E	31	32	36	38	18'-5"	E	31	32	35	37
Double 16 G Steel C	N9, N25, T	27'-5"	E	30	35	39	41	26'-1"	E	31	35	39	41	24'-9"	E	32	34	38	40	23'-1"	E	32	34	37	40	21'-10"	F1	33	33	37	39
Double 14 G Steel C	N9, N25, T	29'-3"	E	30	36	40	42	27'-10"	E	31	35	39	42	26'-7"	F1	32	35	39	41	25'-7"	F1	33	35	38	41	24'-8"	F1	34	34	38	40
Double 12 G Steel C	N9, N25, T	33'-3"	E	32	37	41	43	31'-7"	F1	33	37	41	43	30'-3"	F1	34	36	40	42	29'-2"	F1	35	36	40	42	28'-2"	F1	36	36	39	42
Steel Cloverleaf	W	8'-4"	A1	20	20	23	24	7'-7"	A1	20	20	22	23	6'-11"	A1	21	20	23	24	6'-5"	A2	21	21	23	25	6'-0"	A2	21	22	24	25
DBL Steel Cloverleaf	AA	12'-10"	A2	23	23	25	27	12'-3"	B	24	22	25	26	11'-8"	C	25	22	25	26	11'-1"	C	25	22	24	26	10'-7"	C	26	22	24	25
4x3 I Beam	Y	10'-4"	A2	22	23	26	27	9'-3"	A2	22	22	25	26	8'-4"	A2	22	22	24	26	7'-6"	A2	22	21	24	25	6'-11"	A2	22	22	24	25
7x4 I Beam	Q	18'-8"	C	26	31	34	36	16'-9"	D	27	30	33	35	15'-3"	D	27	29	33	35	13'-11"	D	27	29	32	34	12'-10"	D	27	28	31	33

Header	Detail	trib 5.5'	Min Post Type	Uplift Footing (in)	8'	12'	15'	trib 6'	Min Post Type	Uplift Footing (in)	8'	12'	15'	trib 6.5'	Min Post Type	Uplift Footing (in)	8'	12'	15'	trib 7'	Min Post Type	Uplift Footing (in)	8'	12'	15'	trib 7.5'	Min Post Type	Uplift Footing (in)	8'	12'	15'
On Slab	On Slab	6'-5"	A2					5'-11"	A2					5'-5"	A2					5'-1"	A2					4'-9"	A2				
0.042"x3"x8"	N30	5'-9"	A2	22	24	26	28	5'-5"	A2	22	23	26	27	5'-1"	A2	22	23	26	27	4'-9"	A2	22	24	26	28	4'-7"	A2	22	24	27	28
Double 3"x8"	N25	9'-1"	C	25	27	30	31	8'-7"	C	26	26	29	31	8'-2"	C	26	26	29	30	7'-9"	C	26	26	28	30	7'-6"	C	26	25	28	30
Double 2"x6.625"	N25	8'-3"	C	24	25	28	29	7'-10"	C	25	25	27	29	7'-5"	C	25	24	27	28	7'-2"	C	25	24	27	28	6'-10"	C	25	24	27	28
5.5" Extruded Fascia	L	6'-4"	A2	22	22	25	26	6'-0"	A2	23	23	25	27	5'-7"	A2	23	23	26	27	5'-4"	A2	23	24	26	28	5'-1"	A2	23	24	27	28
California Fascia	N10, G	6'-3"	A2	22	22	25	26	5'-10"	A2	22	23	25	27	5'-6"	A2	23	23	26	27	5'-2"	A2	23	24	26	28	4'-11"	A2	23	24	27	28
Alaskan Fascia	K	8'-1"	C	24	23	26	27	7'-8"	C	25	23	26	27	7'-3"	C	25	23	26	27	6'-11"	C	25	24	26	28	6'-7"	C	25	24	27	28
Classic Fascia	H	11'-8"	D	27	26	29	31	11'-4"	D	28	26	29	30	11'-1"	D	28	26	29	30	10'-9"	D	29	26	28	30	10'-7"	E	29	25	28	30
16 G Steel C	N9, T	8'-11"	C	25	27	29	31	8'-3"	C	25	26	29	31	7'-6"	C	25	25	28	30	7'-0"	C	25	25	28	29	6'-7"	C	25	25	27	29
14 G Steel C	N9, T	11'-9"	D	27	28	32	33	11'-0"	D	28	28	31	33	10'-2"	D	28	27	30	32	9'-6"	D	28	27	30	32	8'-10"	D	28	27	29	31
12 G Steel C	N9, T	17'-5"	E	31	31	35	37	16'-6"	E	32	31	34	36	15'-7"	E	32	31	34	36	14'-10"	E	32	30	33	35	14'-2"	F1	32	30	33	35
Double 16 G Steel C	N9, N25, T	20'-9"	F1	33	33	36	39	19'-10"	F1	34	33	36	38	18'-10"	F1	34	32	36	38	18'-1"	F1	34	32	35	37	17'-5"	F1	35	31	35	37
Double 14 G Steel C	N9, N25, T	23'-7"	F1	35	34	38	40	22'-6"	F1	35	34	37	39	21'-6"	F1	36	33	37	39	20'-9"	F1	36	33	36	39	20'-0"	F2	36	33	36	38
Double 12 G Steel C	N9, N25, T	27'-3"	F2	36	35	39	41	26'-6"	F2	37	35	39	41	25'-10"	F2	38	35	39	41	25'-2"	F2	38	35	38	41	24'-8"	F3	39	34	38	40
Steel Cloverleaf	W	5'-7"	A2	21	22	25	26	5'-4"	A2	22	23	25	27	5'-0"	A2	22	23	26	27	4'-9"	A2	22	24	26	28	4'-6"	A2	22	24	27	28
DBL Steel Cloverleaf	AA	10'-1"	C	26	22	25	26	9'-8"	D	27	23	25	27	9'-3"	D	27	23	26	27	8'-11"	D	27	24	26	28	8'-8"	D	27	24	27	28
4x3 I Beam	Y	6'-5"	A2	22	22	25	26	5'-11"	A2	23	23	25	27	5'-6"	A2	23	23	26	27	5'-2"	A2	23	24	26	28	4'-11"	A2	23	24	27	28
7x4 I Beam	Q	12'-0"	D	28	28	31	32	11'-2"	D	28	27	30	32	10'-5"	D	28	27	30	31	9'-10"	D	28	26	29	31	9'-4"	D	28	26	29	30

Footing (in) Max Post Length

Header	Detail	trib 8'	Min Post Type	Uplift Footing (in)	8'	12'	15'	trib 8.5'	Min Post Type	Uplift Footing (in)	8'	12'	15'	trib 9'	Min Post Type	Uplift Footing (in)	8'	12'	15'	trib 9.5'	Min Post Type	Uplift Footing (in)	8'	12'	15'	trib 10'	Min Post Type	Uplift Footing (in)	8'	12'	15'
On Slab	On Slab	4'-5"	A2					4'-2"	A2					3'-11"	A2					3'-9"	A2					3'-6"	A2				
0.042"x3"x8"	N30	4'-4"	A2	22	24	27	29	4'-1"	A2	22	25	28	29	3'-11"	A2	23	25	28	30	3'-9"	A2	23	26	28	30	3'-7"	A2	23	26	29	30
Double 3"x8"	N25	7'-2"	D	26	25	28	29	6'-10"	D	27	25	28	29	6'-7"	D	27	25	28	30	6'-4"	D	27	26	28	30	6'-2"	D	27	26	29	30
Double 2"x6.625"	N25	6'-7"	C	26	24	27	29	6'-4"	C	26	25	28	29	6'-1"	C	26	25	28	30	5'-11"	C	26	26	28	30	5'-9"	D	26	26	29	30
5.5" Extruded Fascia	L	4'-10"	A2	23	24	27	29	4'-7"	A2	23	25	28	29	4'-4"	A2	23	25	28	30	4'-2"	A2	23	26	28	30	4'-0"	A2	24	26	29	30
California Fascia	N10, G	4'-8"	A2	23	24	27	29	4'-5"	A2	23	25	28	29	4'-3"	A2	23	25	28	30	4'-1"	A2	23	26	28	30	3'-11"	A2	23	26	29	30
Alaskan Fascia	K	6'-4"	C	25	24	27	29	6'-1"	C	25	25	28	29	5'-10"	C	26	25	28	30	5'-7"	C	26	26	28	30	5'-5"	C	26	26	29	30
Classic Fascia	H	10'-3"	E	30	25	28	30	9'-10"	E	30	25	28	29	9'-6"	E	30	25	28	30	9'-3"	E	30	26	28	30	8'-11"	E	31	26	29	30
16 G Steel C	N9, T	6'-2"	C	25	24	27	29	5'-9"	C	25	25	28	29	5'-5"	C	25	25	28	30	5'-2"	C	25	26	28	30	4'-11"	C	25	26	29	30
14 G Steel C	N9, T	8'-4"	D	28	26	29	31	7'-9"	D	28	26	28	30	7'-4"	D	28	25	28	30	7'-0"	D	28	26	28	30	6'-8"	D	28	26	29	30
12 G Steel C	N9, T	13'-7"	F1	33	30	33	35	13'-0"	F1	33	29	32	34	12'-6"	F1	33	29	32	34	12'-1"	F1	33	29	32	34	11'-8"	F1	33	28	32	33
Double 16 G Steel C	N9, N25, T	16'-10"	F1	35	31	35	37	16'-2"	F1	35	31	34	36	15'-8"	F1	36	31	34	36	15'-3"	F1	36	30	34	36	14'-9"	F1	36	30	33	35
Double 14 G Steel C	N9, N25, T	19'-4"	F2	37	32	36	38	18'-8"	F2	37	32	35	38	18'-2"	F2	37	32	35	37	17'-8"	F2	38	32	35	37	17'-2"	F2	38	31	35	37
Double 12 G Steel C	N9, N25, T	24'-1"	F3	40	34	38	40	23'-4"	F3	40	34	38	40	22'-8"	F3	40	34	37	39	22'-1"	F3	41	33	37	39	21'-6"	F4	41	33	37	39
Steel Cloverleaf	W	4'-4"	A2	22	24	27	29	4'-1"	A2	22	25	28	29	4'-0"	A2	23	25	28	30	3'-10"	A2	23	26	28	30	3'-8"	A2	23	26	29	30
DBL Steel Cloverleaf	AA	8'-4"	D	28	24	27	29	8'-1"	D	28	25	28	29	7'-10"	D	28	25	28	30	7'-8"	D	29	26	28	30	7'-6"	D	29	26	29	30
4x3 I Beam	Y	4'-7"	A2	23	24	27	29	4'-4"	A2	23	25	28	29	4'-2"	A2	23	25	28	30	3'-11"	A2	23	26	28	30	3'-9"	A2	23	26	29	30
7x4 I Beam	Q	8'-10"	D	28	26	28	30	8'-5"	D	28	25	28	30	8'-0"	D	28	25	28	30	7'-8"	D	29	26	28	30	7'-4"	D	29	26	29	30

Header	Detail	trib 11'	Min Post Type	Uplift Footing (in)	8'	12'	15'	trib 12'	Min Post Type	Uplift Footing (in)	8'	12'	15'	trib 13'	Min Post Type	Uplift Footing (in)	8'	12'	15'	trib 14'	Min Post Type	Uplift Footing (in)	8'	12'	15'	trib 15'	Min Post Type	Uplift Footing (in)	8'	12'	15'
On Slab	On Slab	3'-2"	A2					2'-11"	A2					2'-8"	A2					2'-6"	A2					2'-4"	A2				
0.042"x3"x8"	N30	3'-4"	A2	23	27	29	31	3'-1"	A2	23	27	30	32	2'-11"	A2	23	28	31	32	2'-8"	A2	23	28	31	33	2'-6"	A2	23	29	32	34
Double 3"x8"	N25	5'-9"	D	27	27	29	31	5'-5"	D	28	27	30	32	5'-1"	D	28	28	31	32	4'-10"	D	28	28	31	33	4'-7"	D	28	29	32	34
Double 2"x6.625"	N25	5'-5"	D	27	27	29	31	5'-1"	D	27	27	30	32	4'-10"	D	27	28	31	32	4'-7"	D	27	28	31	33	4'-4"	D	28	29	32	34
5.5" Extruded Fascia	L	3'-9"	A2	24	27	29	31	3'-6"	B	24	27	30	32	3'-3"	B	24	28	31	32	3'-0"	B	24	28	31	33	2'-10"	B	24	29	32	34
California Fascia	N10, G	3'-7"	A2	23	27	29	31	3'-4"	A2	24	27	30	32	3'-1"	A2	24	28	31	32	2'-11"	B	24	28	31	33	2'-9"	B	24	29	32	34
Alaskan Fascia	K	5'-1"	C	26	27	29	31	4'-9"	D	26	27	30	32	4'-6"	D	27	28	31	32	4'-3"	D	27	28	31	33	4'-0"	D	27	29	32	34
Classic Fascia	H	8'-5"	E	31	27	29	31	8'-0"	E	31	27	30	32	7'-7"	E	32	28	31	32	7'-2"	E	32	28	31	33	6'-11"	E	32	29	32	34
16 G Steel C	N9, T	4'-5"	C	25	27	29	31	4'-1"	C	25	27	30	32	3'-9"	C	25	28	31	32	3'-6"	C	25	28	31	33	3'-3"	C	25	29	32	34
14 G Steel C	N9, T	6'-0"	D	28	27	29	31	5'-6"	D	28	27	30	32	5'-1"	D	28	28	31	32	4'-9"	D	28	28	31	33	4'-5"	D	28	29	32	34
12 G Steel C	N9, T	10'-11"	F1	34	28	31	33	10'-3"	F1	34	28	31	32	9'-8"	F1	34	28	31	32	9'-2"	F1	35	28	31	33	8'-9"	F1	35	29	32	34
Double 16 G Steel C	N9, N25, T	13'-11"	F2	37	30	33	35	13'-3"	F2	37	29	33	34	12'-7"	F2	37	29	32	34	12'-0"	F2	38	29	32	34	11'-6"	F2	38	29	32	34
Double 14 G Steel C	N9, N25, T	16'-3"	F3	39	31	34	36	15'-6"	F3	39	31	34	36	14'-10"	F3	40	30	33	35	14'-3"	F3	40	30	33	35	13'-9"	F3	40	30	33	35
Double 12 G Steel C	N9, N25, T	20'-6"	F4	42	33	36	38	19'-7"	F4	42	32	36	38	18'-10"	F4	43	32	36	38	18'-2"	F5	43	32	35	37	17'-6"	F5	44	31	35	37
Steel Cloverleaf	W	3'-5"	A2	23	27	29	31	3'-3"	A2	23	27	30	32	3'-0"	A2	23	28	31	32	2'-10"	A2	23	28	31	33	2'-8"	A2	24	29	32	34
DBL Steel Cloverleaf	AA	7'-1"	E	29	27	29	31	6'-10"	E	30	27	30	32	6'-6"	E	30	28	31	32	6'-3"	E	30	28	31	33	6'-0"	E	31	29	32	34
4x3 I Beam	Y	3'-5"	A2	23	27	29	31	3'-2"	A2	23	27	30	32	2'-11"	A2	23	28	31	32	2'-9"	A2	23	28	31	33	2'-7"	A2	23	29	32	34
7x4 I Beam	Q	6'-9"	D	29	27	29	31	6'-3"	D	29	27	30	32	5'-10"	D	29	28	31	32	5'-5"	D	29	28	31	33	5'-1"	E	29	29	32	34

Amerimax Exterior Home Products
28921 US Hwy 74
Romoland, CA 92585

Carl Putnam, P. E.
3441 Ivylink Place
Lynchburg, VA 24503
(434) 384-2514
carlputnam@comcast.net

PROFESSIONAL ENGINEER
CARL PUTNAM
C 68139
EXP. 6/30/2019
CIVIL
STATE OF CALIFORNIA

May 27 2017

SECTION 5.0 POST SPACING, POST TYPE AND FOOTING SIZE FOR SOLID COVERS

Ground Snow Load: 0 psf   Live Load: 10 psf   Roof Design Load 25 psf   Wind Speed: 130 MPH EXPOSURE C or 150 MPH EXPOSURE B   Seismic Ss= 150%   Seismic Design Category D   Freestanding or Attached Structures

Table 5.5a (cubic footing "d"; Constrained Footing (in), Max Post Length 8', 10', 12')

Header	Detail	trib 3'	Min Post Type	Uplift Footing (in)	8'	10'	12'	trib 3.5'	Min Post Type	Uplift Footing (in)	8'	10'	12'	trib 4'	Min Post Type	Uplift Footing (in)	8'	10'	12'	trib 4.5'	Min Post Type	Uplift Footing (in)	8'	10'	12'	trib 5'	Min Post Type	Uplift Footing (in)	8'	10'	12'	trib 5.5'	Min Post Type	Uplift Footing (in)	8'	10'	12'	trib 6'	Min Post Type	Uplift Footing (in)	8'	10'	12'	trib 6.5'	Min Post Type	Uplift Footing (in)	8'	10'	12'	trib 7'	Min Post Type	Uplift Footing (in)	8'	10'	12'	trib 7.5'	Min Post Type	Uplift Footing (in)	8'	10'	12'	trib 8'	Min Post Type	Uplift Footing (in)	8'	10'	12'
On Slab	On Slab	22'-8"	D					19'-5"	D					17'-0"	D					15'-1"	D					13'-7"	D					12'-4"	D					11'-4"	D					10'-5"	A1					9'-8"	D					9'-1"	D					8'-6"	D				
0.042"x3"x8"	N30	9'-4"	A1	23	29	30	32	8'-7"	A1	23	28	30	31	7'-9"	A1	23	27	29	30	7'-3"	A1	24	27	28	30	6'-9"	A2	24	26	28	29	6'-4"	A2	24	26	27	29	5'-11"	A2	25	26	27	28	5'-8"	A2	25	25	27	28	5'-4"	A2	25	25	27	28	5'-1"	A2	25	26	27	28	4'-10"	A2	25	26	28	29
Double 3"x8"	N25	14'-0"	A2	26	32	34	35	12'-11"	A2	27	31	33	34	11'-10"	A2	27	30	32	34	11'-2"	B	27	30	32	33	10'-6"	C	28	29	31	33	9'-11"	C	28	29	31	32	9'-4"	C	29	29	30	32	8'-11"	C	29	28	30	31	8'-7"	C	29	28	30	31	8'-2"	C	29	28	29	31	7'-10"	C	30	27	29	30
Double 2"x6.625"	N25	12'-6"	A2	25	29	31	33	11'-7"	A2	26	29	30	32	10'-8"	A2	26	28	30	31	10'-0"	A2	27	28	29	31	9'-6"	A2	27	27	29	30	9'-0"	B	27	27	29	30	8'-6"	C	28	27	28	30	8'-2"	C	28	26	28	29	7'-10"	C	28	26	28	29	7'-6"	C	29	26	27	29	7'-2"	C	29	26	28	29
5.5" Extruded Fascia	L	10'-6"	A1	24	27	28	30	9'-7"	A2	24	26	28	29	8'-8"	A2	24	26	27	28	8'-1"	A2	25	25	27	28	7'-6"	A2	25	25	26	27	7'-1"	A2	25	24	26	27	6'-7"	A2	25	24	26	27	6'-3"	A2	26	25	26	27	5'-11"	A2	26	25	27	28	5'-8"	A2	26	26	27	28	5'-4"	A2	26	26	28	29
California Fascia	N10, G	10'-6"	A1	24	26	27	28	9'-6"	A2	24	25	26	28	8'-7"	A2	24	24	26	27	8'-0"	A2	25	24	25	27	7'-5"	A2	25	24	25	26	7'-0"	A2	25	24	25	26	6'-6"	A2	25	24	26	27	6'-2"	A2	25	25	26	27	5'-10"	A2	26	25	27	28	5'-6"	A2	26	26	27	28	5'-3"	A2	26	26	28	29
Alaskan Fascia	K	12'-8"	A2	25	28	30	31	11'-8"	A2	26	27	29	30	10'-8"	A2	26	27	28	30	10'-0"	A2	26	26	28	29	9'-5"	A2	27	26	27	29	8'-10"	B	27	26	27	28	8'-4"	B	27	25	27	28	7'-11"	C	28	25	26	28	7'-7"	C	28	25	27	28	7'-3"	C	28	26	27	28	6'-11"	C	28	26	28	29
Classic Fascia	H	17'-1"	C	28	31	32	34	16'-3"	C	29	30	32	34	15'-6"	C	29	30	32	33	14'-8"	C	30	29	31	33	14'-0"	D	31	29	31	32	13'-4"	D	31	29	30	32	12'-8"	D	32	28	30	32	12'-3"	D	32	28	30	31	11'-10"	D	32	28	30	31	11'-5"	D	33	28	29	31	11'-0"	D	33	27	29	30
16 G Steel C	N9, T	16'-8"	B	27	33	35	37	15'-0"	C	28	32	34	36	13'-6"	C	28	31	33	35	12'-5"	C	28	31	33	34	11'-4"	C	29	30	32	33	10'-5"	C	29	29	31	33	9'-5"	C	29	29	30	32	8'-9"	C	29	28	30	31	8'-2"	C	29	28	29	31	7'-7"	C	29	27	29	30	7'-1"	C	29	27	28	30
14 G Steel C	N9, T	19'-10"	C	29	35	37	38	17'-11"	C	30	34	36	37	16'-2"	C	30	33	35	36	15'-0"	D	30	32	34	36	13'-11"	D	31	32	33	35	13'-1"	D	31	31	33	35	12'-2"	D	31	31	32	34	11'-6"	D	31	30	32	33	10'-11"	D	32	30	31	33	10'-3"	D	32	29	31	32	9'-7"	D	32	29	30	32
12 G Steel C	N9, T	27'-9"	D	32	38	40	42	25'-4"	E	33	37	39	41	23'-2"	E	34	36	38	40	21'-7"	E	34	35	37	39	20'-3"	E	35	35	37	39	19'-2"	E	35	34	36	38	18'-0"	E	35	34	36	37	17'-1"	E	36	33	35	37	16'-4"	E	36	33	35	37	15'-8"	E	36	33	34	36	14'-11"	E	37	32	34	36
Double 16 G Steel C	N9, N25, T	31'-0"	E	34	39	41	43	28'-8"	E	35	38	40	42	26'-6"	E	35	37	39	41	25'-0"	E	36	37	39	41	23'-8"	E	37	36	38	40	22'-6"	F1	37	36	38	40	21'-4"	F1	38	35	37	39	20'-6"	F1	38	35	37	39	19'-8"	F1	38	35	37	38	19'-0"	F1	39	34	36	38	18'-3"	F1	39	34	36	38
Double 14 G Steel C	N9, N25, T	34'-7"	E	35	40	42	44	32'-1"	E	36	39	41	43	29'-9"	E	37	38	41	42	28'-1"	F1	37	38	40	42	26'-8"	F1	38	37	39	41	25'-5"	F1	39	37	39	41	24'-2"	F1	39	36	38	40	23'-3"	F1	40	36	38	40	22'-5"	F1	40	36	38	40	21'-8"	F1	41	35	37	39	20'-10"	F1	41	35	37	39
Double 12 G Steel C	N9, N25, T	40'-0"	E	37	41	44	46	39'-4"	F1	38	41	44	46	36'-6"	F1	39	40	43	45	34'-6"	F1	40	40	42	44	32'-10"	F1	41	39	42	44	31'-4"	F2	41	39	41	43	29'-10"	F2	42	38	41	43	28'-9"	F2	43	38	40	42	27'-9"	F2	43	38	40	42	26'-10"	F2	44	37	40	41	25'-10"	F3	44	37	39	41
Steel Cloverleaf	W	9'-2"	A1	22	22	23	25	8'-4"	A1	23	22	23	24	7'-7"	A1	23	22	23	24	7'-0"	A1	24	22	24	25	6'-7"	A2	24	23	24	26	6'-2"	A2	24	24	25	26	5'-10"	A2	24	24	26	27	5'-6"	A2	25	25	26	27	5'-3"	A2	25	25	27	28	5'-0"	A2	25	26	27	28	4'-9"	A2	25	26	28	29
DBL Steel Cloverleaf	AA	14'-8"	A2	26	25	26	28	13'-7"	A2	27	25	26	27	12'-8"	C	28	24	25	27	11'-11"	C	28	24	25	26	11'-4"	C	29	23	25	26	10'-10"	C	29	24	25	26	10'-4"	C	29	24	26	27	9'-11"	C	30	25	26	27	9'-7"	D	30	25	27	28	9'-4"	D	31	26	27	28	9'-0"	D	31	26	28	29
4x3 I Beam	Y	11'-6"	A2	24	25	27	28	10'-4"	A2	25	25	26	27	9'-3"	A2	25	24	25	26	8'-5"	A2	25	23	25	26	7'-9"	A2	25	23	24	26	7'-3"	A2	25	24	25	26	6'-8"	A2	26	24	26	27	6'-3"	A2	26	25	26	27	5'-11"	A2	26	25	27	28	5'-7"	A2	26	26	27	28	5'-3"	A2	26	26	28	29
7x4 I Beam	Q	17'-8"	C	28	32	34	36	17'-1"	C	29	32	34	36	16'-6"	C	30	32	34	35	15'-6"	D	31	31	33	35	14'-4"	D	31	31	33	34	13'-5"	D	31	30	32	34	12'-6"	D	31	30	31	33	11'-9"	D	32	29	31	32	11'-1"	D	32	29	31	32	10'-6"	D	32	28	30	32	9'-11"	D	32	28	30	31

Header	Detail	trib 8.5'	Min Post Type	Uplift Footing (in)	8'	10'	12'	trib 9'	Min Post Type	Uplift Footing (in)	8'	10'	12'	trib 10'	Min Post Type	Uplift Footing (in)	8'	10'	12'	trib 11'	Min Post Type	Uplift Footing (in)	8'	10'	12'	trib 12'	Min Post Type	Uplift Footing (in)	8'	10'	12'	trib 13'	Min Post Type	Uplift Footing (in)	8'	10'	12'	trib 14'	Min Post Type	Uplift Footing (in)	8'	10'	12'	trib 15'	Min Post Type	Uplift Footing (in)	8'	10'	12'	trib 16'	Min Post Type	Uplift Footing (in)	8'	10'	12'	trib 17'	Min Post Type	Uplift Footing (in)	8'	10'	12'
On Slab	On Slab	8'-0"	D					7'-6"	D					6'-9"	D					6'-2"	D					5'-8"	D					5'-2"	D					4'-10"	D					4'-6"	D					4'-3"	D					4'-0"	D				
0.042"x3"x8"	N30	4'-7"	A2	25	26	28	29	4'-5"	A2	25	27	28	30	4'-1"	A2	21	28	29	31	3'-9"	A2	26	28	30	31	3'-6"	A2	21	29	31	32	3'-3"	A2	26	29	31	33	3'-1"	A2	26	30	32	33	2'-11"	A2	26	31	32	34	2'-9"	A2	26	31	33	34	2'-7"	A2	26	32	33	35
Double 3"x8"	N25	7'-7"	C	30	27	29	30	7'-3"	C	30	27	28	30	6'-9"	D	24	28	29	31	6'-4"	D	31	28	30	31	6'-0"	D	25	29	31	32	5'-8"	D	31	29	31	33	5'-4"	D	31	30	32	33	5'-1"	D	32	31	32	34	4'-10"	D	32	31	33	34	4'-8"	D	32	32	33	35
Double 2"x6.625"	N25	6'-11"	C	29	26	28	29	6'-9"	C	29	27	28	30	6'-3"	C	24	28	29	31	5'-11"	C	30	28	30	31	5'-7"	D	24	29	31	32	5'-4"	D	31	29	31	33	5'-1"	D	31	30	32	33	4'-10"	D	31	31	32	34	4'-7"	D	31	31	33	34	4'-5"	D	31	32	33	35
5.5" Extruded Fascia	L	5'-1"	A2	26	26	28	29	4'-11"	A2	26	27	28	30	4'-6"	A2	21	28	29	31	4'-2"	A2	27	28	30	31	3'-11"	A2	22	29	31	32	3'-8"	A2	27	29	31	33	3'-5"	B	27	30	32	33	3'-3"	B	27	31	32	34	3'-1"	B	27	31	33	34	2'-11"	B	27	32	33	35
California Fascia	N10, G	5'-0"	A2	26	26	28	29	4'-10"	A2	26	27	28	30	4'-5"	A2	21	28	29	31	4'-1"	A2	27	28	30	31	3'-9"	A2	21	29	31	32	3'-7"	A2	27	29	31	33	3'-4"	A2	27	30	32	33	3'-2"	A2	27	31	32	34	3'-0"	A2	27	31	33	34	2'-10"	B	27	32	33	35
Alaskan Fascia	K	6'-8"	C	29	26	28	29	6'-5"	C	29	27	28	30	6'-0"	C	23	28	29	31	5'-7"	C	29	28	30	31	5'-3"	C	24	29	31	32	5'-0"	C	30	29	31	33	4'-9"	D	30	30	32	33	4'-6"	D	30	31	32	34	4'-3"	D	31	31	33	34	4'-1"	D	31	32	33	35
Classic Fascia	H	10'-8"	E	34	27	29	30	10'-5"	E	34	27	29	30	9'-9"	E	27	28	29	31	9'-3"	E	35	28	30	31	8'-9"	E	28	29	31	32	8'-4"	E	35	29	31	33	7'-11"	E	36	30	32	33	7'-7"	E	36	31	32	34	7'-3"	E	36	31	33	34	7'-0"	E	37	32	33	35
16 G Steel C	N9, T	6'-8"	C	29	26	28	29	6'-4"	C	29	27	28	30	5'-8"	C	23	28	29	31	5'-2"	C	29	28	30	31	4'-9"	C	23	29	31	32	4'-4"	C	29	29	31	33	4'-1"	C	29	30	32	33	3'-9"	C	29	31	32	34	3'-6"	C	29	31	33	34	3'-4"	C	29	32	33	35
14 G Steel C	N9, T	9'-0"	D	32	28	30	31	8'-7"	D	32	28	30	31	7'-8"	D	25	28	29	31	7'-0"	D	32	28	30	31	6'-5"	D	25	29	31	32	5'-11"	D	32	29	31	33	5'-6"	D	32	30	32	33	5'-1"	D	32	31	32	34	4'-9"	D	32	31	33	34	4'-6"	D	32	32	33	35
12 G Steel C	N9, T	14'-4"	E	37	32	34	35	13'-10"	F1	37	32	33	35	12'-10"	F1	30	31	33	34	12'-1"	F1	38	31	32	34	11'-4"	F1	31	30	32	33	10'-9"	F1	39	30	31	33	10'-2"	F1	39	30	32	33	9'-9"	F1	39	31	32	34	9'-3"	F1	39	31	33	34	8'-11"	F1	40	32	33	35
Double 16 G Steel C	N9, N25, T	17'-8"	F1	40	34	36	37	17'-1"	F1	40	33	35	37	16'-1"	F1	32	33	35	36	15'-3"	F1	41	32	34	36	14'-5"	F2	33	32	34	35	13'-9"	F2	42	32	33	35	13'-2"	F2	42	31	33	35	12'-7"	F2	43	31	33	34	12'-1"	F2	43	31	33	34	11'-8"	F2	43	32	33	35
Double 14 G Steel C	N9, N25, T	20'-2"	F2	41	35	37	39	19'-8"	F2	42	35	37	38	18'-6"	F2	34	34	36	38	17'-8"	F2	43	34	36	37	16'-10"	F2	35	33	35	37	16'-1"	F3	44	33	35	36	15'-5"	F3	45	32	34	36	14'-11"	F3	45	32	34	36	14'-4"	F3	46	32	34	35	13'-11"	F3	46	32	33	35
Double 12 G Steel C	N9, N25, T	25'-1"	F3	44	37	39	41	24'-5"	F3	45	36	39	40	23'-1"	F3	37	36	38	40	22'-1"	F3	46	36	38	39	21'-1"	F4	38	35	37	39	20'-3"	F4	48	35	37	39	19'-6"	F4	48	34	36	38	18'-10"	F4	49	34	36	38	18'-3"	F5	49	34	36	38	17'-8"	F5	50	34	36	37
Steel Cloverleaf	W	4'-7"	A2	25	26	28	29	4'-5"	A2	25	27	28	30	4'-1"	A2	21	28	29	31	3'-10"	A2	26	28	30	31	3'-7"	A2	21	29	31	32	3'-4"	A2	26	29	31	33	3'-2"	A2	26	30	32	33	3'-0"	A2	27	31	32	34	2'-11"	A2	27	31	33	34	2'-9"	A2	27	32	33	35
DBL Steel Cloverleaf	AA	8'-8"	D	31	26	28	29	8'-6"	D	32	27	28	30	8'-0"	D	26	28	29	31	7'-8"	D	33	28	30	31	7'-4"	D	27	29	31	32	7'-0"	E	34	29	31	33	6'-9"	E	34	30	32	33	6'-7"	E	34	31	32	34	6'-4"	E	35	31	33	34	6'-1"	E	35	32	33	35
4x3 I Beam	Y	5'-0"	A2	26	26	28	29	4'-9"	A2	26	27	28	30	4'-3"	A2	21	28	29	31	3'-11"	A2	26	28	30	31	3'-8"	A2	21	29	31	32	3'-5"	A2	26	29	31	33	3'-2"	A2	26	30	32	33	2'-11"	A2	26	31	32	34	2'-9"	A2	26	31	33	34	2'-7"	A2	27	32	33	35
7x4 I Beam	Q	9'-6"	D	32	28	29	31	9'-1"	D	32	27	29	30	8'-3"	D	26	28	29	31	7'-8"	D	33	28	30	31	7'-1"	D	26	29	31	32	6'-7"	D	33	29	31	33	6'-2"	D	33	30	32	33	5'-10"	D	33	31	32	34	5'-6"	D	33	31	33	34	5'-2"	E	33	32	33	35

Ground Snow Load: 0 psf   Live Load: 20 psf   Roof Design Load 33 psf   Wind Speed: 130 MPH EXPOSURE C or 150 MPH EXPOSURE B   Seismic Ss= 150%   Seismic Design Category D   Freestanding or Attached Structures

Table 5.5b (cubic footing "d"; Constrained Footing (in), Max Post Length 8', 12', 15')

Header	Detail	trib 3'	Min Post Type	Uplift Footing (in)	8'	12'	15'	trib 3.5'	Min Post Type	Uplift Footing (in)	8'	12'	15'	trib 4'	Min Post Type	Uplift Footing (in)	8'	12'	15'	trib 4.5'	Min Post Type	Uplift Footing (in)	8'	12'	15'	trib 5'	Min Post Type	Uplift Footing (in)	8'	12'	15'	trib 5.5'	Min Post Type	Uplift Footing (in)	8'	12'	15'	trib 6'	Min Post Type	Uplift Footing (in)	8'	12'	15'	trib 6.5'	Min Post Type	Uplift Footing (in)	8'	12'	15'	trib 7'	Min Post Type	Uplift Footing (in)	8'	12'	15'	trib 7.5'	Min Post Type	Uplift Footing (in)	8'	12'	15'
On Slab	On Slab	11'-10"	A2					10'-2"	A2					8'-11"	A2					7'-11"	A2					7'-1"	A2					6'-5"	A2					5'-11"	A2					5'-5"	A2					5'-1"	A2					4'-9"	A2				
0.042"x3"x8"	N30	8'-0"	A1	21	27	30	32	7'-3"	A2	22	27	30	31	6'-7"	A2	22	26	29	31	6'-1"	A2	22	26	28	30	5'-8"	A2	23	25	28	30	5'-3"	A2	23	25	27	29	4'-11"	A2	23	24	27	29	4'-8"	A2	23	25	27	29	4'-5"	A2	23	25	28	30	4'-2"	A2	23	26	28	30
Double 3"x8"	N25	12'-2"	A2	25	31	34	36	11'-2"	C	25	30	33	35	10'-2"	C	26	29	32	34	9'-6"	C	26	29	32	34	8'-11"	C	26	28	31	33	8'-5"	C	27	28	31	33	8'-0"	C	27	27	30	32	7'-7"	C	27	27	30	32	7'-3"	C	28	27	30	31	6'-11"	D	28	26	29	31
Double 2"x6.625"	N25	10'-11"	A2	24	28	31	33	10'-0"	A2	24	28	31	33	9'-3"	B	25	27	30	32	8'-8"	C	25	27	30	31	8'-2"	C	26	26	29	31	7'-8"	C	26	26	29	30	7'-4"	C	26	26	28	30	7'-0"	C	27	25	28	30	6'-8"	C	27	25	28	30	6'-4"	C	27	26	28	30
5.5" Extruded Fascia	L	8'-11"	A2	22	26	28	30	8'-1"	A2	23	25	28	29	7'-3"	A2	23	24	27	29	6'-9"	A2	23	24	27	28	6'-3"	A2	23	23	26	28	5'-10"	A2	24	24	26	28	5'-6"	A2	24	24	27	28	5'-2"	A2	24	25	27	29	4'-10"	A2	24	25	28	30	4'-7"	A2	24	26	28	30
California Fascia	N10, G	8'-10"	A2	22	25	27	29	8'-0"	A2	23	24	27	28	7'-2"	A2	23	23	26	27	6'-7"	A2	23	23	25	27	6'-2"	A2	23	23	26	27	5'-9"	A2	24	24	26	28	5'-4"	A2	24	24	27	28	5'-1"	A2	24	25	27	29	4'-9"	A2	24	25	28	30	4'-6"	A2	24	26	28	30
Alaskan Fascia	K	10'-11"	A2	24	27	30	32	10'-0"	A2	24	26	29	31	9'-1"	A2	25	26	29	30	8'-6"	B	25	25	28	30	7'-11"	C	25	25	28	29	7'-6"	C	26	24	27	29	7'-1"	C	26	24	27	28	6'-9"	C	26	25	27	29	6'-5"	C	26	25	28	30	6'-1"	C	27	26	28	30
Classic Fascia	H	14'-3"	C	26	29	32	34	13'-6"	C	27	29	32	34	13'-0"	D	28	29	32	34	12'-6"	D	29	28	31	33	12'-1"	D	29	28	31	33	11'-8"	D	30	28	31	33	11'-2"	D	30	28	31	32	10'-9"	E	31	27	30	32	10'-4"	E	31	27	30	32	9'-11"	E	31	27	30	31
16 G Steel C	N9, T	13'-10"	C	26	32	35	37	12'-5"	C	26	31	34	36	10'-10"	C	26	30	33	35	9'-8"	C	26	29	32	34	8'-9"	C	26	28	31	33	7'-11"	C	26	27	30	32	7'-4"	C	26	27	30	32	6'-9"	C	26	26	29	31	6'-3"	C	26	26	29	30	5'-10"	C	26	26	28	30
14 G Steel C	N9, T	16'-8"	C	27	33	37	39	15'-0"	D	28	32	36	38	13'-6"	D	28	31	35	37	12'-5"	D	28	31	34	36	11'-6"	D	29	30	33	35	10'-9"	D	29	30	33	35	9'-10"	D	29	29	32	34	9'-1"	D	29	28	32	33	8'-6"	D	29	28	31	33	7'-10"	D	29	27	30	32
12 G Steel C	N9, T	23'-9"	E	31	36	40	42	21'-7"	E	31	35	39	41	19'-8"	E	32	35	38	40	18'-4"	E	32	34	38	40	17'-1"	E	33	33	37	39	16'-1"	E	33	33	36	38	15'-3"	E	34	32	36	38	14'-5"	E	34	32	35	37	13'-9"	F1	34	32	35	37	13'-1"	F1	34	31	35	37
Double 16 G Steel C	N9, N25, T	27'-1"	E	32	37	41	44	25'-0"	E	33	37	41	43	23'-1"	E	34	36	40	42	21'-8"	F1	34	35	39	41	20'-6"	F1	35	35	39	41	19'-5"	F1	35	34	38	40	18'-6"	F1	36	34	38	40	17'-9"	F1	36	34	37	39	17'-0"	F1	37	33	37	39	16'-3"	F1	37	33	36	39
Double 14 G Steel C	N9, N25, T	29'-3"	E	33	38	42	45	27'-10"	F1	34	38	42	44	26'-0"	F1	35	37	41	43	24'-6"	F1	36	37	40	43	23'-3"	F1	36	36	40	42	22'-2"	F1	37	36	39	42	21'-2"	F1	37	35	39	41	20'-4"	F2	38	35	39	41	19'-6"	F2	38	34	38	40	18'-9"	F2	39	34	38	40
Double 12 G Steel C	N9, N25, T	33'-3"	F1	35	39	44	46	31'-7"	F1	36	39	43	46	30'-3"	F1	37	39	43	45	29'-2"	F1	38	38	42	45	28'-2"	F2	39	38	42	44	27'-3"	F2	40	38	42	44	26'-3"	F2	40	37	41	44	25'-3"	F3	41	37	41	43	24'-4"	F3	41	36	40	43	23'-5"	F3	42	36	40	42
Steel Cloverleaf	W	7'-9"	A1	21	21	24	25	7'-0"	A1	22	21	23	25	6'-5"	A2	22	22	24	26	5'-11"	A2	22	22	25	26	5'-6"	A2	23	23	26	27	5'-2"	A2	23	24	26	28	4'-10"	A2	23	24	27	28	4'-7"	A2	23	25	27	29	4'-5"	A2	23	25	28	30	4'-2"	A2	23	26	28	30
DBL Steel Cloverleaf	AA	12'-10"	B	25	24	27	28	11'-11"	C	26	24	26	28	11'-1"	C	26	23	26	27	10'-6"	C	27	23	25	27	9'-11"	C	27	23	26	27	9'-6"	D	28	24	26	28	9'-1"	D	28	24	27	28	8'-9"	D	29	25	27	29	8'-5"	D	29	25	28	30	8'-1"	D	29	26	28	30
4x3 I Beam	Y	9'-6"	A2	23	24	27	28	8'-5"	A2	23	23	26	27	7'-6"	A2	23	23	25	27	6'-10"	A2	23	22	25	26	6'-3"	A2	23	23	26	27	5'-9"	A2	24	24	26	28	5'-4"	A2	24	24	27	28	5'-0"	A2	24	25	27	29	4'-8"	A2	24	25	28	30	4'-5"	A2	24	26	28	30
7x4 I Beam	Q	17'-3"	D	28	32	36	38	15'-6"	D	28	31	35	37	13'-11"	D	28	31	34	36	12'-9"	D	29	30	33	35	11'-9"	D	29	29	32	34	10'-11"	D	29	29	32	34	10'-2"	D	29	28	31	33	9'-7"	D	30	28	31	33	9'-0"	D	30	27	30	32	8'-5"	D	30	27	30	32

Header	Detail	trib 8'	Min Post Type	Uplift Footing (in)	8'	12'	15'	trib 8.5'	Min Post Type	Uplift Footing (in)	8'	12'	15'	trib 9'	Min Post Type	Uplift Footing (in)	8'	12'	15'	trib 9.5'	Min Post Type	Uplift Footing (in)	8'	12'	15'	trib 10'	Min Post Type	Uplift Footing (in)	8'	12'	15'	trib 10.5'	Min Post Type	Uplift Footing (in)	8'	12'	15'	trib 11'	Min Post Type	Uplift Footing (in)	8'	12'	15'	trib 12'	Min Post Type	Uplift Footing (in)	8'	12'	15'	trib 13'	Min Post Type	Uplift Footing (in)	8'	12'	15'	trib 13.5'	Min Post Type	Uplift Footing (in)	8'	12'	15'
On Slab	On Slab	4'-5"	A2					4'-2"	A2					3'-11"	A2					3'-9"	A2					3'-6"	A2					3'-4"	A2					3'-2"	A2					2'-11"	A2					2'-8"	A2					2'-7"	A2				
0.042"x3"x8"	N30	3'-11"	A2	24	26	29	31	3'-9"	A2	24	26	29	31	3'-7"	A2	24	27	30	31	3'-5"	A2	24	27	30	32	3'-3"	A2	24	28	31	32	3'-2"	A2	24	28	31	33	3'-0"	A2	24	28	31	33	2'-9"	A2	24	29	32	34	2'-7"	A2	24	29	33	35	2'-6"	A2	24	30	33	35
Double 3"x8"	N25	6'-7"	D	28	26	29	31	6'-4"	D	28	26	29	31	6'-1"	D	28	27	30	31	5'-10"	D	28	27	30	32	5'-8"	D	29	28	31	32	5'-6"	D	29	28	31	33	5'-3"	D	29	28	31	33	4'-11"	D	29	29	32	34	4'-8"	D	29	29	33	35	4'-6"	D	29	30	33	35
Double 2"x6.625"	N25	6'-1"	C	27	26	29	31	5'-11"	C	27	26	29	31	5'-8"	D	28	27	30	31	5'-6"	D	28	27	30	32	5'-4"	D	28	28	31	32	5'-2"	D	28	28	31	33	5'-0"	D	28	28	31	33	4'-8"	D	29	29	32	34	4'-5"	D	29	29	33	35	4'-4"	D	29	30	33	35
5.5" Extruded Fascia	L	4'-4"	A2	24	26	29	31	4'-2"	A2	25	26	29	31	4'-0"	A2	25	27	30	31	3'-10"	A2	25	27	30	32	3'-8"	A2	25	28	31	32	3'-6"	B	25	28	31	33	3'-5"	B	25	28	31	33	3'-2"	B	25	29	32	34	2'-11"	B	25	29	33	35	2'-10"	B	25	30	33	35
California Fascia	N10, G	4'-3"	A2	24	26	29	31	4'-1"	A2	24	26	29	31	3'-10"	A2	24	27	30	31	3'-8"	A2	24	27	30	32	3'-7"	A2	25	28	31	32	3'-5"	A2	25	28	31	33	3'-3"	A2	25	28	31	33	3'-0"	A2	25	29	32	34	2'-10"	B	25	29	33	35	2'-9"	B	25	30	33	35
Alaskan Fascia	K	5'-10"	C	27	26	29	31	5'-7"	C	27	26	29	31	5'-5"	C	27	27	30	31	5'-2"	C	27	27	30	32	5'-0"	C	27	28	31	32	4'-10"	C	28	28	31	33	4'-8"	D	28	28	31	33	4'-4"	D	28	29	32	34	4'-1"	D	28	29	33	35	4'-0"	D	28	30	33	35
Classic Fascia	H	9'-6"	E	32	26	29	31	9'-2"	E	32	26	29	31	8'-10"	E	32	27	30	31	8'-7"	E	32	27	30	32	8'-4"	E	33	28	31	32	8'-1"	E	33	28	31	33	7'-10"	E	33	28	31	33	7'-4"	E	33	29	32	34	7'-0"	E	34	29	33	35	6'-10"	E	34	30	33	35
16 G Steel C	N9, T	5'-5"	C	26	26	29	31	5'-2"	C	26	26	29	31	4'-10"	C	26	27	30	31	4'-7"	C	26	27	30	32	4'-4"	C	26	28	31	32	4'-2"	C	26	28	31	33	4'-0"	C	26	28	31	33	3'-8"	C	26	29	32	34	3'-4"	C	26	29	33	35	3'-3"	C	26	30	33	35
14 G Steel C	N9, T	7'-4"	D	29	27	30	32	6'-11"	D	29	27	29	31	6'-7"	D	29	27	30	31	6'-3"	D	29	27	30	32	5'-11"	D	29	28	31	32	5'-8"	D	29	28	31	33	5'-5"	D	29	28	31	33	4'-11"	D	29	29	32	34	4'-6"	D	29	29	33	35	4'-4"	D	29	30	33	35
12 G Steel C	N9, T	12'-6"	F1	35	31	34	36	12'-0"	F1	35	30	34	36	11'-7"	F1	35	30	33	35	11'-2"	F1	35	30	33	35	10'-9"	F1	35	30	33	35	10'-5"	F1	36	29	33	34	10'-1"	F1	36	29	32	34	9'-5"	F1	36	29	32	34	8'-11"	F1	36	29	33	35	8'-8"	F1	36	30	33	35
Double 16 G Steel C	N9, N25, T	15'-8"	F1	37	33	36	38	15'-2"	F1	38	32	36	38	14'-8"	F2	38	32	36	38	14'-2"	F2	38	32	35	37	13'-9"	F2	38	32	35	37	13'-5"	F2	39	31	35	37	13'-0"	F2	39	31	34	36	12'-4"	F2	39	31	34	36	11'-8"	F2	40	30	34	36	11'-5"	F2	40	30	33	35
Double 14 G Steel C	N9, N25, T	18'-2"	F2	39	34	37	40	17'-7"	F2	40	34	37	39	17'-0"	F2	40	33	37	39	16'-7"	F2	40	33	37	39	16'-1"	F3	41	33	36	38	15'-8"	F3	41	33	36	38	15'-4"	F3	41	32	36	38	14'-7"	F3	42	32	35	38	13'-11"	F3	42	32	35	37	13'-8"	F3	42	31	35	37
Double 12 G Steel C	N9, N25, T	22'-8"	F3	42	36	40	42	22'-0"	F3	43	36	39	42	21'-4"	F4	43	35	39	41	20'-10"	F4	43	35	39	41	20'-3"	F4	44	35	39	41	19'-9"	F4	44	35	38	41	19'-4"	F4	44	34	38	40	18'-5"	F5	45	34	38	40	17'-9"	F5	46	34	37	39	17'-5"	F5	46	33	37	39
Steel Cloverleaf	W	4'-0"	A2	24	26	29	31	3'-10"	A2	24	26	29	31	3'-8"	A2	24	27	30	31	3'-6"	A2	24	27	30	32	3'-4"	A2	24	28	31	32	3'-3"	A2	24	28	31	33	3'-2"	A2	24	28	31	33	2'-11"	A2	25	29	32	34	2'-9"	A2	25	29	33	35	2'-8"	A2	25	30	33	35
DBL Steel Cloverleaf	AA	7'-10"	D	30	26	29	31	7'-8"	D	30	26	29	31	7'-5"	D	30	27	30	31	7'-3"	E	31	27	30	32	7'-0"	E	31	28	31	32	6'-10"	E	31	28	31	33	6'-9"	E	31	28	31	33	6'-5"	E	32	29	32	34	6'-1"	E	32	29	33	35	6'-0"	E	32	30	33	35
4x3 I Beam	Y	4'-2"	A2	24	26	29	31	3'-11"	A2	24	26	29	31	3'-9"	A2	24	27	30	31	3'-7"	A2	24	27	30	32	3'-5"	A2	24	28	31	32	3'-3"	A2	24	28	31	33	3'-1"	A2	24	28	31	33	2'-10"	A2	24	29	32	34	2'-8"	A2	24	29	33	35	2'-7"	A2	24	30	33	35
7x4 I Beam	Q	8'-0"	D	30	27	29	31	7'-7"	D	30	26	29	31	7'-3"	D	30	27	30	31	6'-11"	D	30	27	30	32	6'-7"	D	30	28	31	32	6'-4"	D	30	28	31	33	6'-1"	D	30	28	31	33	5'-7"	D	30	29	32	34	5'-3"	E	30	29	33	35	5'-1"	E	30	30	33	35

Amerimax Exterior Home Products
28921 US Hwy 74
Romoland, CA 92585

Carl Putnam, P. E.
3441 Ivylink Place
Lynchburg, VA 24503
(434) 384-2514
carlputnam@comcast.net

PROFESSIONAL ENGINEER
CARL PUTNAM
C 68139
EXP. 6/30/2019
CIVIL
STATE OF CALIFORNIA

May 27 2017

SECTION 5.0 POST SPACING, POST TYPE AND FOOTING SIZE FOR SOLID COVERS

Ground Snow Load: 0 psf   Live Load: 10 psf   Roof Design Load 28 psf   Wind Speed: 140 MPH EXPOSURE C or 160 MPH EXPOSURE B   Seismic Ss= 150%   Seismic Design Category D   Freestanding or Attached Structures

Table 5.6a (cubic footing "d"; Constrained Footing (in) Max Post Length 8', 10', 12')

Header	Detail	trib 3'	Min Post Type	Uplift Footing (in)	8'	10'	12'	trib 3.5'	Min Post Type	Uplift Footing (in)	8'	10'	12'	trib 4'	Min Post Type	Uplift Footing (in)	8'	10'	12'	trib 4.5'	Min Post Type	Uplift Footing (in)	8'	10'	12'
On Slab	On Slab	22'-8"	D					19'-5"	D					17'-0"	D					15'-1"	D				
0.042"x3"x8"	N30	8'-10"	A1	23	29	31	32	8'-0"	A1	24	29	30	32	7'-4"	A1	24	28	30	31	6'-9"	A2	24	27	29	30
Double 3"x8"	N25	13'-3"	A2	27	32	34	36	12'-2"	A2	27	32	34	35	11'-3"	B	28	31	33	34	10'-6"	C	28	31	32	34
Double 2"x6.625"	N25	11'-10"	A2	26	30	32	33	10'-11"	A2	26	29	31	33	10'-1"	A2	27	29	31	32	9'-6"	A2	27	28	30	31
5.5" Extruded Fascia	L	9'-11"	A2	24	27	29	30	8'-11"	A2	25	27	28	30	8'-2"	A2	25	26	28	29	7'-6"	A2	25	26	27	28
California Fascia	N10, G	9'-10"	A1	24	26	28	29	8'-10"	A2	25	26	27	28	8'-1"	A2	25	25	26	28	7'-5"	A2	25	24	26	27
Alaskan Fascia	K	12'-0"	A2	26	29	30	32	10'-11"	A2	26	28	30	31	10'-1"	A2	27	27	29	30	9'-5"	A2	27	27	28	30
Classic Fascia	H	16'-3"	C	29	31	33	35	15'-6"	C	30	31	33	34	14'-10"	C	31	31	32	34	14'-0"	D	31	30	32	34
16 G Steel C	N9, T	15'-6"	C	28	34	36	37	13'-10"	C	29	33	35	36	12'-7"	C	29	32	34	35	11'-4"	C	29	31	33	35
14 G Steel C	N9, T	18'-6"	C	30	35	37	39	16'-8"	C	30	34	36	38	15'-2"	D	31	34	36	37	13'-11"	D	31	33	35	36
12 G Steel C	N9, T	26'-1"	D	33	39	41	43	23'-9"	E	34	38	40	42	21'-10"	E	35	37	39	41	20'-3"	E	35	36	38	40
Double 16 G Steel C	N9, N25, T	29'-5"	E	35	40	42	44	27'-1"	E	36	39	41	43	25'-3"	E	36	38	40	42	23'-8"	E	37	38	40	42
Double 14 G Steel C	N9, N25, T	32'-10"	E	36	41	43	45	30'-4"	E	37	40	42	44	28'-4"	F1	38	39	42	44	26'-8"	F1	39	39	41	43
Double 12 G Steel C	N9, N25, T	40'-0"	F1	39	43	45	48	37'-3"	F1	40	42	45	47	34'-10"	F1	41	41	44	46	32'-10"	F1	41	41	43	45
Steel Cloverleaf	W	8'-7"	A1	23	23	24	25	7'-9"	A1	24	22	23	24	7'-1"	A1	24	23	24	25	6'-7"	A2	24	23	25	26
DBL Steel Cloverleaf	AA	13'-11"	A2	27	26	27	28	12'-11"	B	28	25	27	28	12'-1"	C	29	25	26	27	11'-4"	C	29	24	26	27
4x3 I Beam	Y	10'-8"	A2	25	26	27	29	9'-6"	A2	25	25	26	28	8'-7"	A2	25	24	26	27	7'-9"	A2	26	24	25	26
7x4 I Beam	Q	17'-1"	C	29	33	35	37	16'-5"	C	30	33	35	37	15'-8"	D	31	33	35	36	14'-4"	D	31	32	34	35

Header	Detail	trib 5'	Min Post Type	Uplift Footing (in)	8'	10'	12'	trib 5.5'	Min Post Type	Uplift Footing (in)	8'	10'	12'	trib 6'	Min Post Type	Uplift Footing (in)	8'	10'	12'	trib 6.5'	Min Post Type	Uplift Footing (in)	8'	10'	12'
On Slab	On Slab	13'-7"	D					12'-4"	D					11'-4"	D					10'-5"	A1				
0.042"x3"x8"	N30	6'-4"	A2	25	27	28	30	5'-11"	A2	25	26	28	29	5'-6"	A2	25	26	28	29	5'-3"	A2	25	26	27	28
Double 3"x8"	N25	9'-10"	C	29	30	32	33	9'-4"	C	29	30	31	33	8'-10"	C	29	29	31	32	8'-5"	C	30	29	31	32
Double 2"x6.625"	N25	8'-11"	B	28	28	30	31	8'-5"	C	28	28	29	31	8'-0"	C	29	27	29	30	7'-8"	C	29	27	29	30
5.5" Extruded Fascia	L	7'-0"	A2	26	25	27	28	6'-6"	A2	26	25	26	27	6'-2"	A2	26	25	27	28	5'-10"	A2	26	26	27	28
California Fascia	N10, G	6'-11"	A2	26	24	25	27	6'-5"	A2	26	25	26	27	6'-0"	A2	26	25	27	28	5'-9"	A2	26	26	27	28
Alaskan Fascia	K	8'-10"	B	28	26	28	29	8'-3"	B	28	26	28	29	7'-10"	C	28	26	27	28	7'-6"	C	29	26	27	28
Classic Fascia	H	13'-3"	D	32	30	32	33	12'-8"	D	32	29	31	33	12'-1"	D	33	29	31	32	11'-8"	D	33	29	31	32
16 G Steel C	N9, T	10'-3"	C	29	30	32	34	9'-4"	C	29	30	31	33	8'-6"	C	29	29	31	32	7'-11"	C	29	28	30	32
14 G Steel C	N9, T	12'-11"	D	31	32	34	36	12'-1"	D	32	32	34	35	11'-4"	D	32	31	33	35	10'-9"	D	32	31	33	34
12 G Steel C	N9, T	19'-0"	E	36	36	38	39	17'-10"	E	36	35	37	39	16'-10"	E	36	34	36	38	16'-1"	E	37	34	36	38
Double 16 G Steel C	N9, N25, T	22'-4"	F1	38	37	39	41	21'-2"	F1	38	37	39	40	20'-2"	F1	39	36	38	40	19'-5"	F1	39	36	38	40
Double 14 G Steel C	N9, N25, T	25'-3"	F1	39	38	40	42	24'-0"	F1	40	38	40	42	22'-11"	F1	40	37	39	41	22'-2"	F1	41	37	39	41
Double 12 G Steel C	N9, N25, T	31'-1"	F2	42	40	43	45	29'-8"	F2	43	40	42	44	28'-4"	F2	43	39	42	44	27'-5"	F2	44	39	41	43
Steel Cloverleaf	W	6'-2"	A2	25	24	25	27	5'-9"	A2	25	25	26	27	5'-5"	A2	25	25	27	28	5'-2"	A2	25	26	27	28
DBL Steel Cloverleaf	AA	10'-9"	C	30	24	25	27	10'-3"	C	30	25	26	27	9'-10"	C	31	25	27	28	9'-6"	D	31	26	27	28
4x3 I Beam	Y	7'-2"	A2	26	24	25	27	6'-7"	A2	26	25	26	27	6'-2"	A2	26	25	27	28	5'-9"	A2	26	26	27	28
7x4 I Beam	Q	13'-3"	D	32	31	33	35	12'-4"	D	32	31	33	34	11'-6"	D	32	30	32	34	10'-11"	D	32	30	32	33

Header	Detail	trib 7'	Min Post Type	Uplift Footing (in)	8'	10'	12'	trib 7.5'	Min Post Type	Uplift Footing (in)	8'	10'	12'	trib 8'	Min Post Type	Uplift Footing (in)	8'	10'	12'
On Slab	On Slab	9'-8"	D					9'-1"	D					8'-6"	D				
0.042"x3"x8"	N30	5'-0"	A2	26	26	28	29	4'-9"	A2	26	27	28	29	4'-6"	A2	26	27	29	30
Double 3"x8"	N25	8'-1"	C	30	29	30	32	7'-8"	C	30	28	30	31	7'-4"	C	31	28	30	31
Double 2"x6.625"	N25	7'-4"	C	29	27	28	30	7'-1"	C	29	27	28	29	6'-9"	C	30	27	29	30
5.5" Extruded Fascia	L	5'-6"	A2	27	26	28	29	5'-3"	A2	27	27	28	29	5'-0"	A2	27	27	29	30
California Fascia	N10, G	5'-5"	A2	26	26	28	29	5'-1"	A2	26	27	28	29	4'-10"	A2	27	27	29	30
Alaskan Fascia	K	7'-2"	C	29	26	28	29	6'-10"	C	29	27	28	29	6'-6"	C	29	27	29	30
Classic Fascia	H	11'-3"	D	34	29	30	32	10'-10"	E	34	28	30	31	10'-6"	E	34	28	30	31
16 G Steel C	N9, T	7'-4"	C	29	28	30	31	6'-10"	C	29	27	29	30	6'-5"	C	29	27	29	30
14 G Steel C	N9, T	10'-0"	D	32	30	32	33	9'-4"	D	32	30	31	33	8'-8"	D	32	29	31	32
12 G Steel C	N9, T	15'-4"	E	37	34	36	37	14'-8"	E	38	33	35	37	14'-0"	F1	38	33	35	36
Double 16 G Steel C	N9, N25, T	18'-8"	F1	40	35	37	39	17'-11"	F1	40	35	37	39	17'-3"	F1	40	35	37	38
Double 14 G Steel C	N9, N25, T	21'-3"	F1	42	37	39	41	20'-6"	F1	42	36	38	40	19'-10"	F2	42	36	38	40
Double 12 G Steel C	N9, N25, T	26'-5"	F2	45	39	41	43	25'-6"	F3	45	38	40	42	24'-8"	F3	46	38	40	42
Steel Cloverleaf	W	4'-11"	A2	26	26	28	29	4'-8"	A2	26	27	28	29	4'-6"	A2	26	27	29	30
DBL Steel Cloverleaf	AA	9'-2"	D	31	26	28	29	8'-10"	D	32	27	28	29	8'-7"	D	32	27	29	30
4x3 I Beam	Y	5'-5"	A2	26	26	28	29	5'-1"	A2	26	27	28	29	4'-10"	A2	26	27	29	30
7x4 I Beam	Q	10'-3"	D	33	29	31	33	9'-8"	D	33	29	31	32	9'-2"	D	33	29	30	32

Header	Detail	trib 8.5'	Min Post Type	Uplift Footing (in)	8'	10'	12'	trib 9'	Min Post Type	Uplift Footing (in)	8'	10'	12'	trib 9.5'	Min Post Type	Uplift Footing (in)	8'	10'	12'	trib 10'	Min Post Type	Uplift Footing (in)	8'	10'	12'
On Slab	On Slab	8'-0"	D					7'-6"	D					7'-2"	D					6'-9"	D				
0.042"x3"x8"	N30	4'-3"	A2	26	27	29	30	4'-1"	A2	26	28	29	31	3'-11"	A2	20	28	30	31	3'-9"	A2	26	29	30	32
Double 3"x8"	N25	7'-1"	D	31	28	29	31	6'-10"	D	31	28	29	31	6'-7"	D	24	28	30	31	6'-4"	D	31	29	30	32
Double 2"x6.625"	N25	6'-6"	C	30	27	29	30	6'-4"	C	30	28	29	31	6'-1"	C	23	28	30	31	5'-11"	C	31	29	30	32
5.5" Extruded Fascia	L	4'-9"	A2	27	27	29	30	4'-6"	A2	27	28	29	31	4'-4"	A2	21	28	30	31	4'-2"	A2	27	29	30	32
California Fascia	N10, G	4'-8"	A2	27	27	29	30	4'-5"	A2	27	28	29	31	4'-3"	A2	20	28	30	31	4'-1"	A2	27	29	30	32
Alaskan Fascia	K	6'-3"	C	30	27	29	30	6'-0"	C	30	28	29	31	5'-10"	C	23	28	30	31	5'-7"	C	30	29	30	32
Classic Fascia	H	10'-2"	E	35	28	30	31	9'-10"	E	35	28	29	31	9'-6"	E	27	28	30	31	9'-2"	E	35	29	30	32
16 G Steel C	N9, T	6'-1"	C	29	27	29	30	5'-9"	C	29	28	29	31	5'-5"	C	22	28	30	31	5'-2"	C	29	29	30	32
14 G Steel C	N9, T	8'-2"	D	32	29	30	32	7'-9"	D	32	28	30	31	7'-4"	D	25	28	30	31	6'-11"	D	32	29	30	32
12 G Steel C	N9, T	13'-5"	F1	38	33	34	36	12'-11"	F1	38	32	34	36	12'-5"	F1	29	32	34	35	12'-0"	F1	39	32	33	35
Double 16 G Steel C	N9, N25, T	16'-8"	F1	41	34	36	38	16'-1"	F1	41	34	36	38	15'-7"	F1	32	34	36	37	15'-2"	F1	42	34	36	37
Double 14 G Steel C	N9, N25, T	19'-2"	F2	43	36	38	39	18'-7"	F2	43	35	37	39	18'-1"	F2	33	35	37	39	17'-7"	F2	44	35	37	39
Double 12 G Steel C	N9, N25, T	23'-11"	F3	46	38	40	42	23'-2"	F3	46	37	40	41	22'-7"	F3	36	37	39	41	22'-0"	F3	47	37	39	41
Steel Cloverleaf	W	4'-3"	A2	26	27	29	30	4'-1"	A2	26	28	29	31	3'-11"	A2	20	28	30	31	3'-10"	A2	26	29	30	32
DBL Steel Cloverleaf	AA	8'-3"	D	32	27	29	30	8'-1"	D	33	28	29	31	7'-10"	D	25	28	30	31	7'-8"	D	33	29	30	32
4x3 I Beam	Y	4'-7"	A2	27	27	29	30	4'-4"	A2	27	28	29	31	4'-1"	A2	20	28	30	31	3'-11"	A2	27	29	30	32
7x4 I Beam	Q	8'-9"	D	33	28	30	31	8'-4"	D	33	28	29	31	7'-11"	D	25	28	30	31	7'-7"	D	33	29	30	32

Header	Detail	trib 10.5'	Min Post Type	Uplift Footing (in)	8'	10'	12'	trib 11'	Min Post Type	Uplift Footing (in)	8'	10'	12'	trib 11.5'	Min Post Type	Uplift Footing (in)	8'	10'	12'
On Slab	On Slab	6'-5"	D					6'-2"	D					5'-11"	D				
0.042"x3"x8"	N30	3'-7"	A2	20	29	31	32	3'-5"	A2	26	29	31	33	3'-4"	A2	26	30	31	33
Double 3"x8"	N25	6'-1"	D	24	29	31	32	5'-11"	D	32	29	31	33	5'-9"	D	32	30	31	33
Double 2"x6.625"	N25	5'-8"	D	23	29	31	32	5'-6"	D	31	29	31	33	5'-5"	D	31	30	31	33
5.5" Extruded Fascia	L	4'-0"	A2	21	29	31	32	3'-10"	A2	27	29	31	33	3'-9"	A2	27	30	31	33
California Fascia	N10, G	3'-11"	A2	21	29	31	32	3'-9"	A2	27	29	31	33	3'-7"	A2	27	30	31	33
Alaskan Fascia	K	5'-5"	C	23	29	31	32	5'-3"	C	30	29	31	33	5'-1"	C	30	30	31	33
Classic Fascia	H	8'-11"	E	27	29	31	32	8'-8"	E	36	29	31	33	8'-5"	E	36	30	31	33
16 G Steel C	N9, T	4'-11"	C	22	29	31	32	4'-8"	C	29	29	31	33	4'-5"	C	29	30	31	33
14 G Steel C	N9, T	6'-7"	D	25	29	31	32	6'-4"	D	32	29	31	33	6'-0"	D	32	30	31	33
12 G Steel C	N9, T	11'-7"	F1	30	31	33	35	11'-3"	F1	39	31	33	34	10'-11"	F1	39	31	33	34
Double 16 G Steel C	N9, N25, T	14'-9"	F1	32	33	35	37	14'-4"	F2	42	33	35	37	13'-11"	F2	43	33	35	36
Double 14 G Steel C	N9, N25, T	17'-1"	F2	34	35	37	38	16'-8"	F2	45	34	36	38	16'-3"	F3	45	34	36	38
Double 12 G Steel C	N9, N25, T	21'-5"	F4	36	37	39	41	20'-11"	F4	48	36	39	40	20'-6"	F4	48	36	38	40
Steel Cloverleaf	W	3'-8"	A2	20	29	31	32	3'-6"	A2	27	29	31	33	3'-5"	A2	27	30	31	33
DBL Steel Cloverleaf	AA	7'-5"	D	26	29	31	32	7'-3"	E	34	29	31	33	7'-1"	E	34	30	31	33
4x3 I Beam	Y	3'-9"	A2	20	29	31	32	3'-7"	A2	27	29	31	33	3'-5"	A2	27	30	31	33
7x4 I Beam	Q	7'-3"	D	25	29	31	32	7'-0"	D	33	29	31	33	6'-9"	D	33	30	31	33

Header	Detail	trib 12'	Min Post Type	Uplift Footing (in)	8'	10'	12'	trib 13'	Min Post Type	Uplift Footing (in)	8'	10'	12'	trib 14'	Min Post Type	Uplift Footing (in)	8'	10'	12'
On Slab	On Slab	5'-8"	D					5'-2"	D					4'-10"	D				
0.042"x3"x8"	N30	3'-2"	A2	27	30	32	33	3'-0"	A2	27	31	32	34	2'-10"	A2	27	31	33	35
Double 3"x8"	N25	5'-7"	D	32	30	32	33	5'-3"	D	32	31	32	34	5'-0"	D	32	31	33	35
Double 2"x6.625"	N25	5'-3"	D	31	30	32	33	5'-0"	D	31	31	32	34	4'-9"	D	32	31	33	35
5.5" Extruded Fascia	L	3'-7"	A2	28	30	32	33	3'-4"	B	28	31	32	34	3'-2"	B	28	31	33	35
California Fascia	N10, G	3'-6"	A2	27	30	32	33	3'-3"	A2	27	31	32	34	3'-1"	A2	27	31	33	35
Alaskan Fascia	K	4'-11"	C	31	30	32	33	4'-8"	D	31	31	32	34	4'-5"	D	31	31	33	35
Classic Fascia	H	8'-2"	E	36	30	32	33	7'-10"	E	37	31	32	34	7'-5"	E	37	31	33	35
16 G Steel C	N9, T	4'-3"	C	29	30	32	33	3'-11"	C	29	31	32	34	3'-8"	C	29	31	33	35
14 G Steel C	N9, T	5'-9"	D	32	30	32	33	5'-4"	D	32	31	32	34	5'-0"	D	32	31	33	35
12 G Steel C	N9, T	10'-7"	F1	39	31	32	34	10'-0"	F1	40	31	32	34	9'-6"	F1	40	31	33	35
Double 16 G Steel C	N9, N25, T	13'-7"	F2	43	33	35	36	13'-0"	F2	43	32	34	36	12'-4"	F2	44	32	34	35
Double 14 G Steel C	N9, N25, T	15'-11"	F3	45	34	36	38	15'-3"	F3	46	34	36	37	14'-8"	F3	46	33	35	37
Double 12 G Steel C	N9, N25, T	20'-0"	F4	49	36	38	40	19'-3"	F4	49	36	38	40	18'-7"	F4	50	35	37	39
Steel Cloverleaf	W	3'-4"	A2	27	30	32	33	3'-2"	A2	27	31	32	34	2'-11"	A2	27	31	33	35
DBL Steel Cloverleaf	AA	6'-11"	E	34	30	32	33	6'-8"	E	35	31	32	34	6'-5"	E	35	31	33	35
4x3 I Beam	Y	3'-4"	A2	27	30	32	33	3'-1"	A2	27	31	32	34	2'-10"	A2	27	31	33	35
7x4 I Beam	Q	6'-6"	D	33	30	32	33	6'-1"	D	34	31	32	34	5'-8"	D	34	31	33	35

Ground Snow Load: 0 psf   Live Load: 20 psf   Roof Design Load 35 psf   Wind Speed: 140 MPH EXPOSURE C or 160 MPH EXPOSURE B   Seismic Ss= 150%   Seismic Design Category D   Freestanding or Attached Structures

Table 5.6b (cubic footing "d"; Constrained Footing (in) Max Post Length 8', 12', 15')

Header	Detail	trib 2'	Min Post Type	Uplift Footing (in)	8'	12'	15'	trib 2.5'	Min Post Type	Uplift Footing (in)	8'	12'	15'	trib 3'	Min Post Type	Uplift Footing (in)	8'	12'	15'	trib 3.5'	Min Post Type	Uplift Footing (in)	8'	12'	15'
On Slab	On Slab	17'-10"	B					14'-3"	B					11'-10"	B					10'-2"	B				
0.042"x3"x8"	N30	9'-8"	A1	21	30	33	35	8'-7"	A1	22	29	32	34	7'-7"	A1	22	28	31	33	6'-10"	A2	23	27	30	32
Double 3"x8"	N25	14'-5"	A2	24	33	37	39	12'-11"	A2	25	32	36	38	11'-7"	B	26	31	35	37	10'-7"	C	26	31	34	36
Double 2"x6.625"	N25	12'-11"	A2	23	31	34	36	11'-7"	A2	24	30	33	35	10'-5"	A2	25	29	32	34	9'-7"	A2	25	28	32	33
5.5" Extruded Fascia	L	10'-11"	A1	22	28	31	33	9'-7"	A2	23	27	30	32	8'-6"	A2	23	26	29	31	7'-7"	A2	23	26	28	30
California Fascia	N10, G	10'-10"	A1	22	27	30	32	9'-6"	A2	23	26	29	31	8'-5"	A2	23	25	28	30	7'-6"	A2	23	24	27	29
Alaskan Fascia	K	13'-1"	A2	23	29	32	34	11'-8"	A2	24	28	32	33	10'-5"	A2	25	28	31	32	9'-6"	A2	25	27	30	32
Classic Fascia	H	16'-3"	A2	25	31	35	37	15'-1"	C	26	31	34	36	14'-3"	C	27	30	34	36	13'-6"	D	28	30	33	35
16 G Steel C	N9, T	17'-3"	B	26	35	38	41	15'-0"	C	26	33	37	39	13'-1"	C	27	32	36	38	11'-7"	C	27	31	35	37
14 G Steel C	N9, T	20'-6"	C	27	36	40	42	17'-11"	C	28	35	39	41	15'-9"	D	28	34	38	40	14'-1"	D	29	33	37	39
12 G Steel C	N9, T	28'-8"	D	30	39	44	46	25'-4"	E	31	38	42	45	22'-7"	E	32	37	41	44	20'-6"	E	33	36	40	42
Double 16 G Steel C	N9, N25, T	31'-3"	D	31	40	45	47	28'-8"	E	33	39	44	46	26'-0"	E	33	38	43	45	23'-10"	E	34	38	42	44
Double 14 G Steel C	N9, N25, T	33'-3"	E	32	41	45	48	31'-0"	E	33	40	45	47	29'-2"	F1	35	40	44	46	26'-11"	F1	36	39	43	45
Double 12 G Steel C	N9, N25, T	37'-10"	E	33	42	47	50	35'-3"	F1	35	42	46	49	33'-3"	F1	36	41	45	48	31'-7"	F1	38	40	45	47
Steel Cloverleaf	W	9'-5"	A1	21	23	26	27	8'-4"	A1	22	22	25	26	7'-5"	A1	22	22	24	26	6'-8"	A2	22	22	24	26
DBL Steel Cloverleaf	AA	14'-8"	A2	24	26	29	30	13'-7"	A2	25	25	28	30	12'-5"	C	26	25	28	29	11'-6"	C	27	24	27	29
4x3 I Beam	Y	12'-0"	A2	23	27	29	31	10'-4"	A2	23	26	28	30	8'-11"	A2	23	25	27	29	7'-11"	A2	24	24	26	28
7x4 I Beam	Q	18'-11"	C	26	34	38	40	17'-10"	C	28	34	37	40	16'-4"	D	29	33	37	39	14'-7"	D	29	32	36	38

Header	Detail	trib 4'	Min Post Type	Uplift Footing (in)	8'	12'	15'	trib 4.5'	Min Post Type	Uplift Footing (in)	8'	12'	15'	trib 5'	Min Post Type	Uplift Footing (in)	8'	12'	15'
On Slab	On Slab	8'-11"	B					7'-11"	B					7'-1"	B				
0.042"x3"x8"	N30	6'-3"	A2	23	27	30	31	5'-9"	A2	23	26	29	31	5'-4"	A2	23	26	29	30
Double 3"x8"	N25	9'-9"	C	27	30	33	35	9'-1"	C	27	29	33	35	8'-7"	C	27	29	32	34
Double 2"x6.625"	N25	8'-10"	B	26	28	31	33	8'-3"	C	26	27	30	32	7'-10"	C	27	27	30	32
5.5" Extruded Fascia	L	6'-11"	A2	24	25	28	29	6'-4"	A2	24	24	27	29	5'-11"	A2	24	24	27	28
California Fascia	N10, G	6'-10"	A2	24	24	26	28	6'-3"	A2	24	23	26	27	5'-10"	A2	24	24	27	28
Alaskan Fascia	K	8'-9"	B	26	26	29	31	8'-1"	C	26	26	29	30	7'-7"	C	26	26	28	30
Classic Fascia	H	13'-0"	D	29	30	33	35	12'-5"	D	30	29	33	34	11'-10"	D	31	29	32	34
16 G Steel C	N9, T	10'-1"	C	27	30	34	36	8'-11"	C	27	29	33	34	8'-2"	C	27	29	32	34
14 G Steel C	N9, T	12'-10"	D	29	32	36	38	11'-9"	D	29	31	35	37	10'-11"	D	30	31	34	36
12 G Steel C	N9, T	18'-9"	E	33	35	39	42	17'-5"	E	34	35	39	41	16'-4"	E	34	34	38	40
Double 16 G Steel C	N9, N25, T	22'-2"	F1	35	37	41	43	20'-9"	F1	36	36	40	43	19'-8"	F1	36	36	40	42
Double 14 G Steel C	N9, N25, T	25'-1"	F1	36	38	42	45	23'-7"	F1	37	38	42	44	22'-5"	F1	38	37	41	43
Double 12 G Steel C	N9, N25, T	30'-3"	F1	39	40	44	47	29'-1"	F2	40	40	44	46	27'-9"	F2	41	39	43	46
Steel Cloverleaf	W	6'-1"	A2	23	23	25	27	5'-7"	A2	23	23	26	27	5'-3"	A2	23	24	27	28
DBL Steel Cloverleaf	AA	10'-8"	C	27	24	27	28	10'-1"	C	28	24	26	28	9'-7"	D	28	24	27	28
4x3 I Beam	Y	7'-1"	A2	24	23	26	27	6'-5"	A2	24	23	26	27	5'-11"	A2	24	24	27	28
7x4 I Beam	Q	13'-2"	D	29	31	35	37	12'-0"	D	30	31	34	36	11'-1"	D	30	30	33	35

Header	Detail	trib 5.5'	Min Post Type	Uplift Footing (in)	8'	12'	15'	trib 6'	Min Post Type	Uplift Footing (in)	8'	12'	15'	trib 6.5'	Min Post Type	Uplift Footing (in)	8'	12'	15'
On Slab	On Slab	6'-5"	B					5'-11"	B					5'-5"	B				
0.042"x3"x8"	N30	5'-0"	A2	24	25	28	30	4'-8"	A2	24	25	28	29	4'-4"	A2	24	26	28	30
Double 3"x8"	N25	8'-1"	C	28	29	32	34	7'-7"	C	28	28	31	33	7'-2"	C	28	28	31	33
Double 2"x6.625"	N25	7'-4"	C	27	27	30	31	7'-0"	C	27	26	29	31	6'-8"	C	28	26	29	30
5.5" Extruded Fascia	L	5'-6"	A2	24	25	27	29	5'-2"	A2	25	25	28	29	4'-10"	A2	25	26	28	30
California Fascia	N10, G	5'-5"	A2	24	25	27	29	5'-1"	A2	24	25	28	29	4'-9"	A2	25	26	28	30
Alaskan Fascia	K	7'-2"	C	27	25	28	29	6'-9"	C	27	25	28	29	6'-4"	C	27	26	28	30
Classic Fascia	H	11'-3"	D	31	29	32	34	10'-9"	E	31	28	31	33	10'-4"	E	32	28	31	33
16 G Steel C	N9, T	7'-4"	C	27	28	31	33	6'-9"	C	27	27	30	32	6'-3"	C	27	27	30	31
14 G Steel C	N9, T	10'-0"	D	30	30	33	35	9'-1"	D	30	30	33	35	8'-5"	D	30	29	32	34
12 G Steel C	N9, T	15'-4"	E	34	34	37	39	14'-5"	E	35	33	37	39	13'-8"	F1	35	33	36	38
Double 16 G Steel C	N9, N25, T	18'-8"	F1	37	35	39	41	17'-9"	F1	37	35	39	41	16'-11"	F1	38	35	38	40
Double 14 G Steel C	N9, N25, T	21'-3"	F1	38	37	41	43	20'-4"	F2	39	36	40	42	19'-5"	F2	39	36	40	42
Double 12 G Steel C	N9, N25, T	26'-5"	F2	41	39	43	45	25'-3"	F3	42	38	42	45	24'-2"	F3	42	38	42	44
Steel Cloverleaf	W	4'-11"	A2	24	25	27	29	4'-7"	A2	24	25	28	29	4'-4"	A2	24	26	28	30
DBL Steel Cloverleaf	AA	9'-2"	D	29	25	27	29	8'-9"	D	29	25	28	29	8'-5"	D	30	26	28	30
4x3 I Beam	Y	5'-5"	A2	24	25	27	29	5'-0"	A2	24	25	28	29	4'-8"	A2	24	26	28	30
7x4 I Beam	Q	10'-3"	D	30	29	33	34	9'-7"	D	30	29	32	34	8'-11"	D	30	28	31	33

Header	Detail	trib 7'	Min Post Type	Uplift Footing (in)	8'	12'	15'	trib 7.5'	Min Post Type	Uplift Footing (in)	8'	12'	15'	trib 8'	Min Post Type	Uplift Footing (in)	8'	12'	15'	trib 8.5'	Min Post Type	Uplift Footing (in)	8'	12'	15'
On Slab	On Slab	5'-1"	B					4'-9"	B					4'-5"	B					4'-2"	B				
0.042"x3"x8"	N30	4'-1"	A2	24	26	29	31	3'-11"	A2	24	27	29	31	3'-8"	A2	24	27	30	32	3'-6"	A2	24	27	30	32
Double 3"x8"	N25	6'-10"	D	28	27	30	32	6'-7"	D	29	27	30	32	6'-3"	D	29	27	30	32	6'-0"	D	29	27	30	32
Double 2"x6.625"	N25	6'-4"	C	28	26	29	31	6'-1"	C	28	27	29	31	5'-10"	C	28	27	30	32	5'-7"	D	28	27	30	32
5.5" Extruded Fascia	L	4'-7"	A2	25	26	29	31	4'-4"	A2	25	27	29	31	4'-1"	A2	25	27	30	32	3'-11"	A2	25	27	30	32
California Fascia	N10, G	4'-5"	A2	25	26	29	31	4'-3"	A2	25	27	29	31	4'-0"	A2	25	27	30	32	3'-10"	A2	25	27	30	32
Alaskan Fascia	K	6'-1"	C	27	26	29	31	5'-10"	C	28	27	29	31	5'-6"	C	28	27	30	32	5'-4"	C	28	27	30	32
Classic Fascia	H	9'-10"	E	32	28	31	32	9'-6"	E	32	27	30	32	9'-1"	E	33	27	30	32	8'-9"	E	33	27	30	32
16 G Steel C	N9, T	5'-9"	C	27	26	29	31	5'-5"	C	27	27	29	31	5'-1"	C	27	27	30	32	4'-9"	C	27	27	30	32
14 G Steel C	N9, T	7'-9"	D	30	28	31	33	7'-4"	D	30	28	31	33	6'-10"	D	30	27	30	32	6'-5"	D	30	27	30	32
12 G Steel C	N9, T	13'-0"	F1	35	32	36	38	12'-5"	F1	36	32	35	37	11'-11"	F1	36	32	35	37	11'-5"	F1	36	31	35	37
Double 16 G Steel C	N9, N25, T	16'-2"	F1	38	34	38	40	15'-7"	F1	38	34	37	40	15'-0"	F1	39	33	37	39	14'-6"	F2	39	33	37	39
Double 14 G Steel C	N9, N25, T	18'-8"	F2	40	35	39	41	18'-1"	F2	40	35	39	41	17'-5"	F2	41	35	39	41	16'-10"	F2	41	34	38	40
Double 12 G Steel C	N9, N25, T	23'-4"	F3	43	37	41	44	22'-7"	F3	43	37	41	44	21'-10"	F3	44	37	41	43	21'-2"	F4	44	37	40	43
Steel Cloverleaf	W	4'-1"	A2	24	26	29	31	3'-11"	A2	24	27	29	31	3'-9"	A2	24	27	30	32	3'-7"	A2	25	27	30	32
DBL Steel Cloverleaf	AA	8'-1"	D	30	26	29	31	7'-10"	D	30	27	29	31	7'-7"	D	31	27	30	32	7'-4"	D	31	27	30	32
4x3 I Beam	Y	4'-4"	A2	25	26	29	31	4'-1"	A2	25	27	29	31	3'-10"	A2	25	27	30	32	3'-8"	A2	25	27	30	32
7x4 I Beam	Q	8'-5"	D	30	28	31	33	7'-11"	D	31	28	31	32	7'-6"	D	31	27	30	32	7'-1"	D	31	27	30	32

Header	Detail	trib 9'	Min Post Type	Uplift Footing (in)	8'	12'	15'	trib 9.5'	Min Post Type	Uplift Footing (in)	8'	12'	15'	trib 10'	Min Post Type	Uplift Footing (in)	8'	12'	15'
On Slab	On Slab	3'-11"	B					3'-9"	B					3'-6"	B				
0.042"x3"x8"	N30	3'-4"	A2	24	28	31	33	3'-2"	A2	25	28	31	33	3'-1"	A2	25	29	32	34
Double 3"x8"	N25	5'-9"	D	29	28	31	33	5'-6"	D	29	28	31	33	5'-4"	D	30	29	32	34
Double 2"x6.625"	N25	5'-5"	D	29	28	31	33	5'-2"	D	29	28	31	33	5'-1"	D	29	29	32	34
5.5" Extruded Fascia	L	3'-9"	A2	25	28	31	33	3'-7"	B	25	28	31	33	3'-5"	B	26	29	32	34
California Fascia	N10, G	3'-7"	A2	25	28	31	33	3'-6"	A2	25	28	31	33	3'-4"	A2	25	29	32	34
Alaskan Fascia	K	5'-1"	C	28	28	31	33	4'-11"	C	28	28	31	33	4'-9"	D	28	29	32	34
Classic Fascia	H	8'-5"	E	33	28	31	33	8'-2"	E	33	28	31	33	7'-11"	E	34	29	32	34
16 G Steel C	N9, T	4'-6"	C	27	28	31	33	4'-3"	C	27	28	31	33	4'-1"	C	27	29	32	34
14 G Steel C	N9, T	6'-1"	D	30	28	31	33	5'-9"	D	30	28	31	33	5'-6"	D	30	29	32	34
12 G Steel C	N9, T	10'-11"	F1	36	31	34	36	10'-6"	F1	36	31	34	36	10'-2"	F1	37	30	34	36
Double 16 G Steel C	N9, N25, T	14'-0"	F2	39	33	36	39	13'-6"	F2	40	33	36	38	13'-2"	F2	40	32	36	38
Double 14 G Steel C	N9, N25, T	16'-4"	F2	41	34	38	40	15'-10"	F3	42	34	38	40	15'-5"	F3	42	34	37	40
Double 12 G Steel C	N9, N25, T	20'-6"	F4	45	36	40	42	20'-0"	F4	45	36	40	42	19'-6"	F4	45	36	40	42
Steel Cloverleaf	W	3'-5"	A2	25	28	31	33	3'-4"	A2	25	28	31	33	3'-2"	A2	25	29	32	34
DBL Steel Cloverleaf	AA	7'-2"	E	31	28	31	33	6'-11"	E	32	28	31	33	6'-9"	E	32	29	32	34
4x3 I Beam	Y	3'-6"	A2	25	28	31	33	3'-3"	A2	25	28	31	33	3'-2"	A2	25	29	32	34
7x4 I Beam	Q	6'-9"	D	31	28	31	33	6'-5"	D	31	28	31	33	6'-2"	D	31	29	32	34

Header	Detail	trib 10.5'	Min Post Type	Uplift Footing (in)	8'	12'	15'	trib 11'	Min Post Type	Uplift Footing (in)	8'	12'	15'	trib 11.5'	Min Post Type	Uplift Footing (in)	8'	12'	15'
On Slab	On Slab	3'-4"	B					3'-2"	B					3'-1"	B				
0.042"x3"x8"	N30	2'-11"	A2	25	29	32	34	2'-10"	A2	25	29	33	34	2'-8"	A2	25	30	33	35
Double 3"x8"	N25	5'-2"	D	30	29	32	34	5'-0"	D	30	29	33	34	4'-10"	D	30	30	33	35
Double 2"x6.625"	N25	4'-11"	D	29	29	32	34	4'-9"	D	29	29	33	34	4'-7"	D	29	30	33	35
5.5" Extruded Fascia	L	3'-3"	B	26	29	32	34	3'-2"	B	26	29	33	34	3'-0"	B	26	30	33	35
California Fascia	N10, G	3'-2"	A2	25	29	32	34	3'-1"	A2	25	29	33	34	2'-11"	A2	25	30	33	35
Alaskan Fascia	K	4'-7"	D	28	29	32	34	4'-5"	D	29	29	33	34	4'-3"	D	29	30	33	35
Classic Fascia	H	7'-8"	E	34	29	32	34	7'-5"	E	34	29	33	34	7'-2"	E	34	30	33	35
16 G Steel C	N9, T	3'-10"	C	27	29	32	34	3'-8"	C	27	29	33	34	3'-6"	C	27	30	33	35
14 G Steel C	N9, T	5'-2"	D	30	29	32	34	5'-0"	D	30	29	33	34	4'-9"	D	30	30	33	35
12 G Steel C	N9, T	9'-10"	F1	37	30	33	35	9'-6"	F1	37	30	33	35	9'-2"	F1	37	30	33	35
Double 16 G Steel C	N9, N25, T	12'-9"	F2	40	32	36	38	12'-4"	F2	40	32	35	37	12'-0"	F2	41	32	35	37
Double 14 G Steel C	N9, N25, T	15'-0"	F3	42	33	37	39	14'-8"	F3	43	33	37	39	14'-3"	F3	43	33	37	39
Double 12 G Steel C	N9, N25, T	19'-0"	F4	46	36	39	42	18'-7"	F4	46	35	39	41	18'-2"	F5	46	35	39	41
Steel Cloverleaf	W	3'-1"	A2	25	29	32	34	2'-11"	A2	25	29	33	34	2'-10"	A2	25	30	33	35
DBL Steel Cloverleaf	AA	6'-7"	E	32	29	32	34	6'-5"	E	32	29	33	34	6'-3"	E	33	30	33	35
4x3 I Beam	Y	3'-0"	A2	25	29	32	34	2'-10"	A2	25	29	33	34	2'-9"	A2	25	30	33	35
7x4 I Beam	Q	5'-11"	D	31	29	32	34	5'-8"	D	31	29	33	34	5'-5"	D	31	30	33	35

Amerimax Exterior Home Products
28921 US Hwy 74
Romoland, CA 92585

Carl Putnam, P. E.
3441 Ivylink Place
Lynchburg, VA 24503
(434) 384-2514
carlputnam@comcast.net

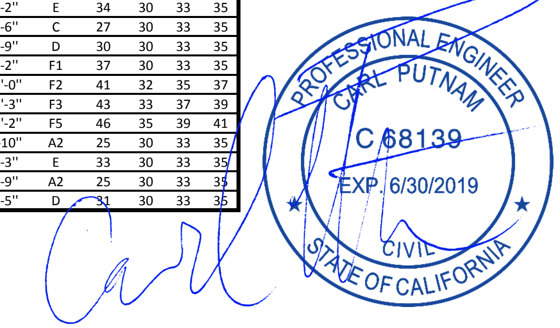

USE OF FOAM CORE SANDWICH PANELS WILL REQUIRE THE USE OF A REGISTERED DESIGN PROFESSIONAL TO COMPLY WITH EXISTING ICC ESR

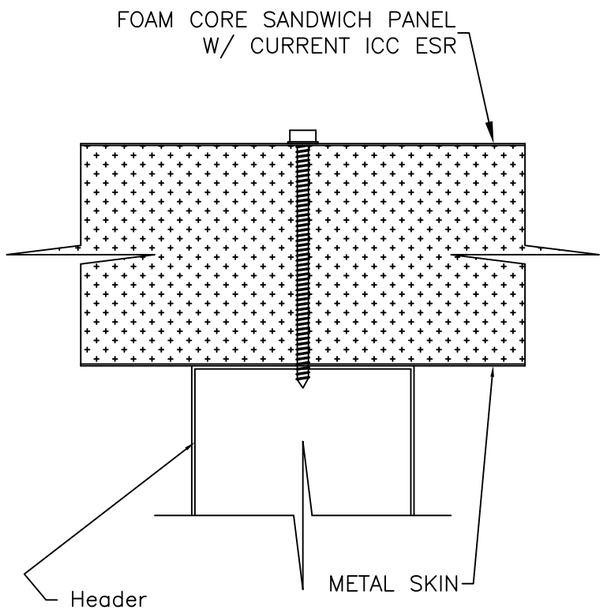

N1 SANDWICH PANEL TO HEADER CONNECTION

N2 2"x6" ALUM FLAT PANEL
t=0.018" 3004H36
t>0.018" 3004H34

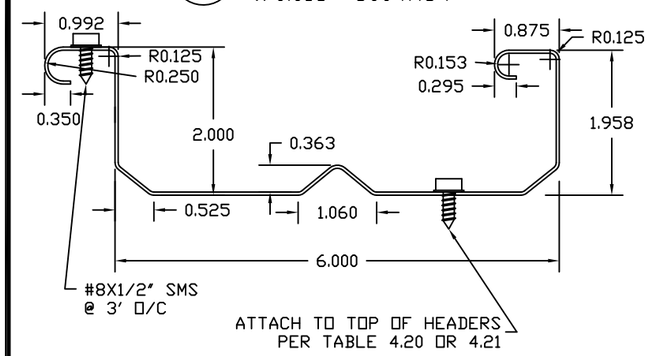

N3 2.5"x6" ALUM FLAT PANEL
t=0.018" 3004H36
t>0.018" 3004H34

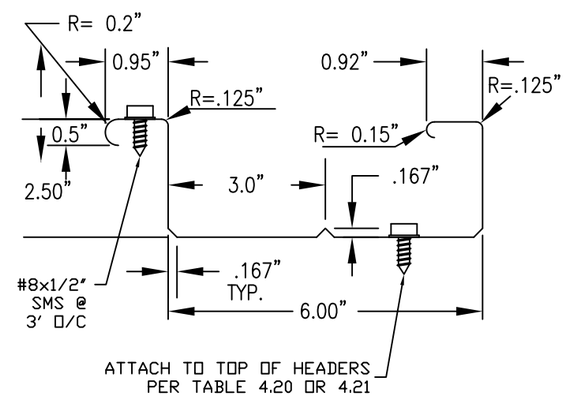

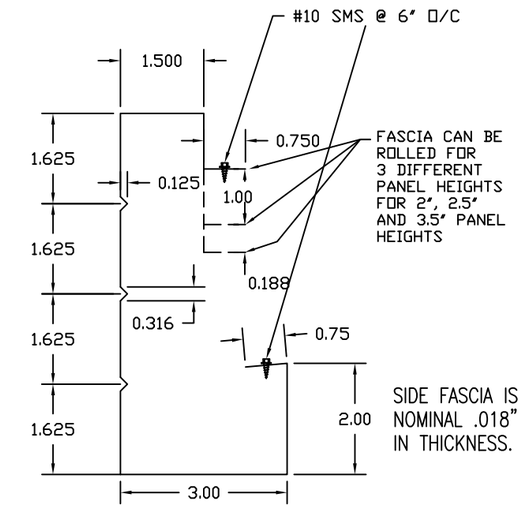

N4 6 1/2" ROLLFORMED HEADER
(3004-H34 ALUM. ALLOY)

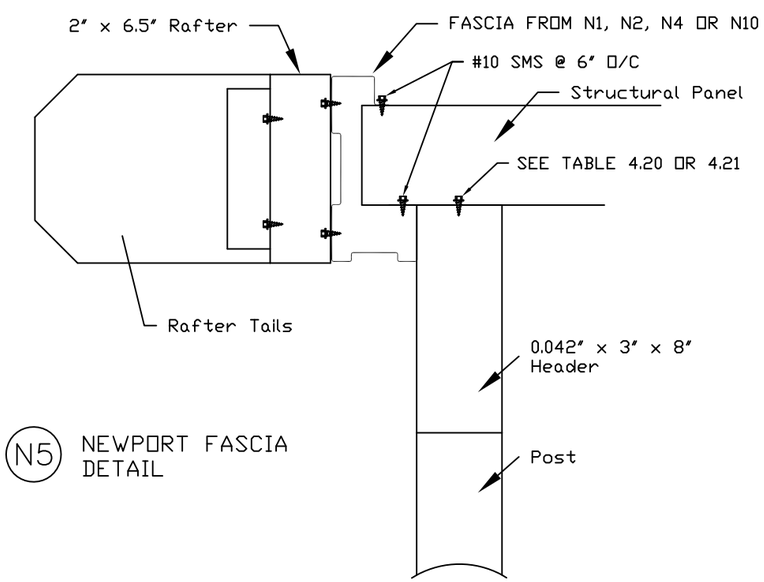

N5 NEWPORT FASCIA DETAIL

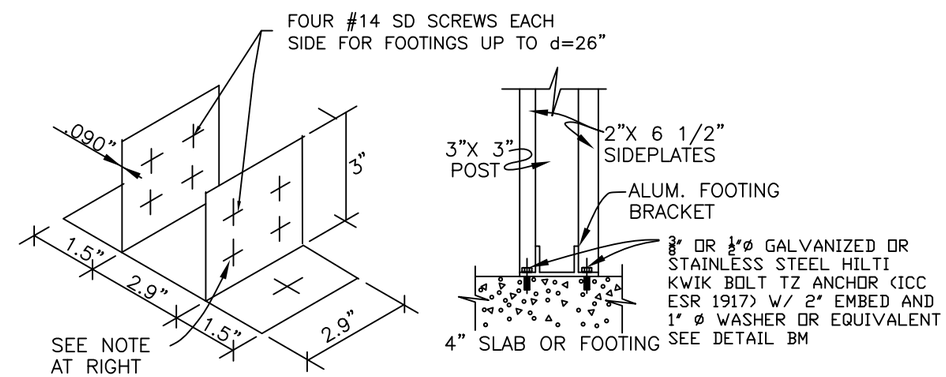

N8 BRACKET FOR CONNECTING POST TO SLAB OR FOOTING (6063-T6 ALUM ALLOY) SINGLE SPAN ATTACHED UNITS ONLY

PROFESSIONAL ENGINEER
CARL PUTNAM
C 68139
EXP. 6/30/2019
CIVIL
STATE OF CALIFORNIA

May 27 2017
Engineer's Stamp

Amerimax EXTERIOR HOME PRODUCTS
28921 US Hwy 74
Romoland, CA 92585

DRAWN BY: BEJ/CP	TYPE:	
SCALE: NTS	NAME: Component Parts & Connection Details for Newport Patio Structures	
DATE:	FILE#: NP01-2015	SHEET: 1 of 4

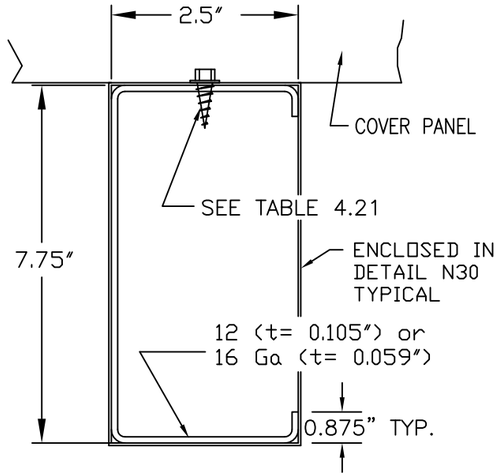

N9 STEEL "C"– CHANNEL HEADER
(STEEL A–653 Fy=50 KSI)

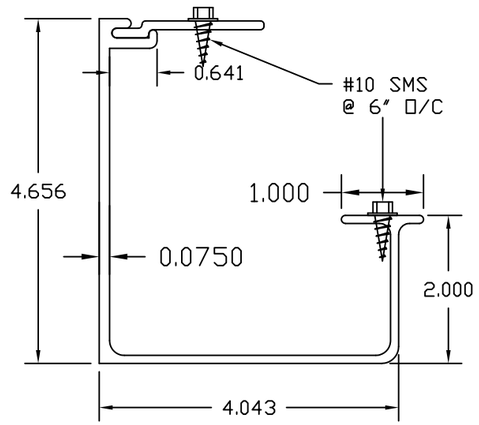

N10 CALIFORNIA FASCIA
(ALUM 6063 T6)

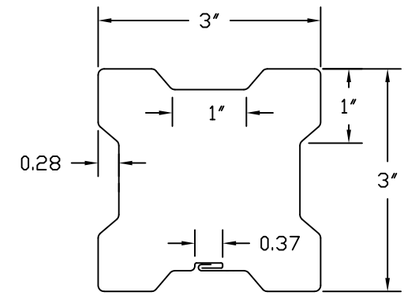

t= 0.030" ALUM
= 0.040" ALUM
= 0.041" STEEL

NOTE:
POSTS MAY BE TRIMMED w/FLEX ALUM. FACING.

N11 3" ALTERNATE POST
(3105–H25 ALUM. ALLOY OR A–653 Fy=40 KSI STEEL)

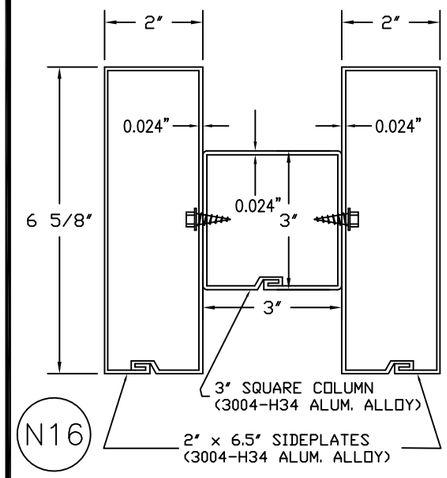

N16 SIDEPLATE CONNECTION DETAIL

Live Load (psf)	Wind Speed and Exposure	MAX "L" FOR TOP OR SIDE MOUNT 16" o/c	24"o/c
10	110 mph Exp B	19'-4"	12'-10"
	115 mph Exp B	17'-10"	11'-10"
	130 mph Exp B	14'-2"	9'-6"
	140 mph Exp B	12'-4"	8'-2"
	110 mph Exp C	16'-2"	10'-9"
	115 mph Exp C	14'-10"	9'-10"
20	130 mph Exp C	11'-4"	7'-6"
	140 mph Exp C	10'-3"	6'-10"

TOP MOUNT BRACKET NOT ALLOWED IN SNOW LOAD AREAS
SEE GENERAL NOTE #9 FOR CORROSION PROTECTION

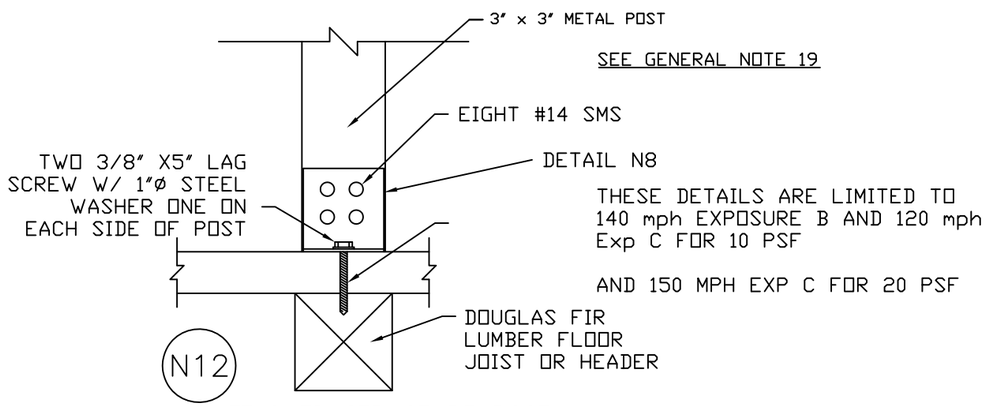

N12 ATTACHED STRUCTURE POST TO DECK FLOOR JOIST

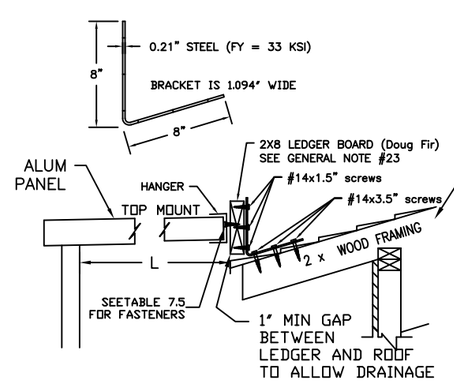

TOP MOUNT BRACKET

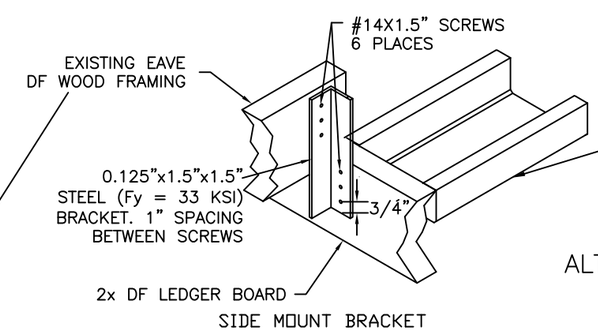

SIDE MOUNT BRACKET

EAVE OVERHANG AND "L" MUST ALSO COMPLY WITH DETAIL N21

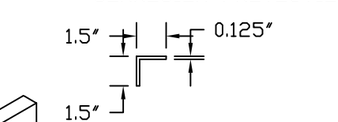

N18 ALTERNATIVE EAVE ATTACHMENT

ALL HOUSE PENETRATIONS MUST BE COMPLETELY AND PERMANENTLY SEALED

N14

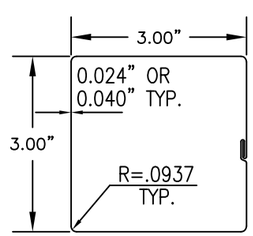

3" ALUM SQUARE POST
t =0.024" 3004H34
t =0.040" 3105H26

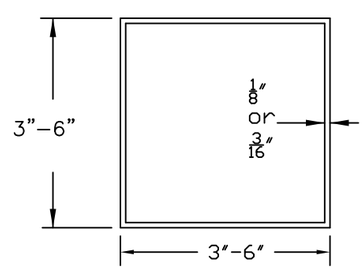

N17 ASTM A500 GRADE B STEEL POST
SEE GENERAL NOTE #9 FOR CORROSION PROTECTION

PROFESSIONAL ENGINEER
CARL PUTNAM
C 68139
EXP. 6/30/2019
CIVIL
STATE OF CALIFORNIA

May 27 2017
Engineer's Stamp

Amerimax EXTERIOR HOME PRODUCTS
28921 US Hwy 74
Romoland, CA 92585

DRAWN BY: BEJ/CP	TYPE:
SCALE: NTS	NAME: Component Parts & Connection Details for Newport Patio Structures
DATE:	FILE#: NP02–2015 — SHEET: 2 of 4

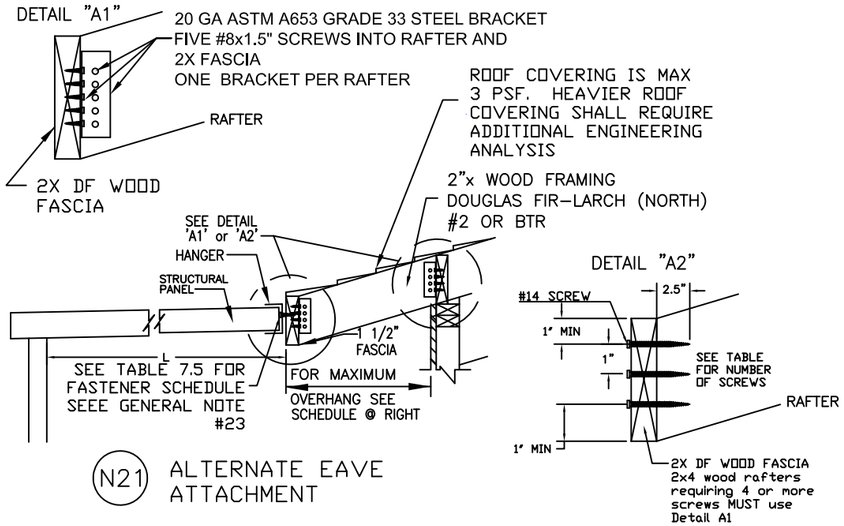

N21 ALTERNATE EAVE ATTACHMENT

Live/Snow Load Solid Cover Wind (psf)	RAFTER SIZE (24" O/C)	MAX DISTANCE TO FIRST ROW OF POSTS "L" EAVE OVERHANG 6"	12"	18"	24"	30"	# of #14 Screws
10 110 MPH EXP B	2x4	17'-8"	15'-4"	8'-10"	5'-3"	2'-9"	3
	2x6	17'-8"	17'-8"	17'-8"	17'-8"	12'-8"	
	2x8	17'-8"	17'-8"	17'-8"	17'-8"	17'-8"	
10 110 MPH EXP C	2x4	17'-8"	13'-8"	7'-9"	4'-7"	2'-5"	3
	2x6	17'-8"	17'-8"	17'-8"	15'-6"	11'-1"	
	2x8	17'-8"	17'-8"	17'-8"	17'-8"	17'-8"	
10 115 MPH EXP B	2x4	17' 8"	14' 6"	8' 4"	4' 11"	2' 7"	3
	2x6	17'-8"	17'-8"	17'-8"	16'-8"	11'-11"	
	2x8	17'-8"	17'-8"	17'-8"	17'-8"	17'-8"	
10 115 MPH EXP C	2x4	17'-8"	12'-8"	7'-4"	4'-4"	2'-3"	3
	2x6	17' 8"	17' 8"	17' 8"	14' 7"	10' 5"	
	2x8	17'-8"	17'-8"	17'-8"	17'-8"	17'-8"	
10 130 MPH EXP C	2x4	17'-8"	10'-7"	6'-1"	3'-7"	1'-10"	4
	2x6	17'-8"	17'-8"	17'-8"	12'-2"	8'-8"	
	2x8	17' 8"	17' 8"	17' 8"	17' 8"	17' 2"	
10 140 MPH EXP C	2x4	17'-8"	9'-4"	5'-3"	3'-0"	1'-5"	4
	2x6	17'-8"	17'-8"	10'-6"	10'-8"	7'-6"	
	2x8	17'-8"	17'-8"	17'-8"	17'-8"	15'-1"	
20 110 MPH EXP C	2x4	15'-6"	10'-4"	5'-11"	3'-6"	1'-10"	4
	2x6	15'-6"	15'-6"	15'-6"	11'-10"	8'-6"	
	2x8	15'-6"	15'-6"	15'-6"	15'-6"	15'-6"	
20 115 MPH EXP C	2x4	15' 6"	9' 9"	5' 7"	3' 3"	1' 7"	4
	2x6	15'-6"	15'-6"	15'-6"	11'-2"	8'-0"	
	2x8	15'-6"	15'-6"	15'-6"	15'-6"	15'-6"	
20 130 MPH EXP C	2x4	15' 6"	8' 4"	4' 8"	2' 6"	1' 1"	4
	2x6	15' 6"	15' 6"	13' 10"	9' 5"	6' 7"	
	2x8	15'-6"	15'-6"	15'-6"	15'-6"	13'-5"	
25 115 MPH EXP C	2x4	15'-6"	9'-6"	5'-5"	3'-1"	1'-6"	4
	2x6	15'-6"	15'-6"	15'-6"	10'-11"	7'-9"	
	2x8	15' 6"	15' 6"	15' 6"	15' 6"	15' 6"	
25 130 MPH EXP C	2x4	15'-6"	8'-2"	4'-6"	2'-5"	1'-0"	4
	2x6	15'-6"	15'-6"	13'-7"	9'-3"	6'-5"	
	2x8	15'-6"	15'-6"	15'-6"	15'-6"	13'-1"	
25 140 MPH EXP C	2x4	15'-6"	7'-4"	4'-0"	2'-1"	0'-8"	4
	2x6	15'-6"	15'-6"	12'-3"	8'-3"	5'-7"	
	2x8	15'-6"	15'-6"	15'-6"	15'-6"	11'-9"	
30 115 MPH EXP C	2x4	14' 9"	8' 8"	4' 10"	2' 8"	1' 2"	4
	2x6	14'-9"	14'-9"	14'-5"	9'-10"	6'-11"	
	2x8	14'-9"	14'-9"	14'-9"	14'-9"	14'-0"	
30 130 MPH EXP C	2x4	14' 9"	7' 6"	4' 1"	2' 1"	0' 9"	4
	2x6	14' 9"	14' 9"	12' 6"	8' 5"	5' 9"	
	2x8	14'-9"	14'-9"	14'-9"	14'-9"	11'-11"	
30 140 MPH EXP C	2x4	14'-9"	6'-9"	3'-7"	1'-9"	0'-5"	4
	2x6	14'-9"	14'-9"	11'-4"	7'-6"	5'-1"	
	2x8	14' 9"	14' 9"	14' 9"	14' 8"	10' 9"	
35.7 110 MPH EXP C	2x4	14'-3"	7'-8"	4'-3"	2'-3"	0'-10"	4
	2x6	14'-3"	14'-3"	12'-10"	8'-8"	5'-11"	
	2x8	14' 3"	14' 3"	14' 3"	14' 3"	12' 4"	
35.7 140 MPH EXP C	2x4	14'-1"	6'-3"	3'-3"	1'-6"	0'-3"	5
	2x6	14'-3"	14'-3"	10'-5"	6'-10"	4'-6"	
	2x8	14'-3"	14'-3"	14'-3"	13'-6"	9'-10"	
42 130 MPH EXP C	2x4	13'-8"	6'-2"	3'-3"	1'-6"	0'-3"	5
	2x6	13'-8"	13'-8"	10'-4"	6'-10"	4'-6"	
	2x8	13'-8"	13'-8"	13'-8"	13'-5"	9'-9"	
42 140 MPH EXP C	2x4	13' 0"	5' 8"	2' 11"	1' 3"	0' 0"	5
	2x6	13'-8"	13'-8"	9'-6"	6'-2"	4'-0"	
	2x8	13'-8"	13'-8"	13'-8"	12'-4"	8'-11"	
50 130 MPH EXP C	2x4	12'-0"	5'-2"	2'-7"	1'-0"	0'-0"	5
	2x6	12' 8"	12' 8"	8' 9"	5' 7"	3' 6"	
	2x8	12' 8"	12' 8"	12' 8"	11' 4"	8' 1"	
60 140 MPH EXP C	2x4	9'-11"	4'-2"	1'-11"	0'-6"	0'-0"	5
	2x6	11'-8"	11'-8"	7'-0"	4'-4"	2'-0"	
	2x8	11' 8"	11' 8"	11' 8"	9' 1"	6' 4"	

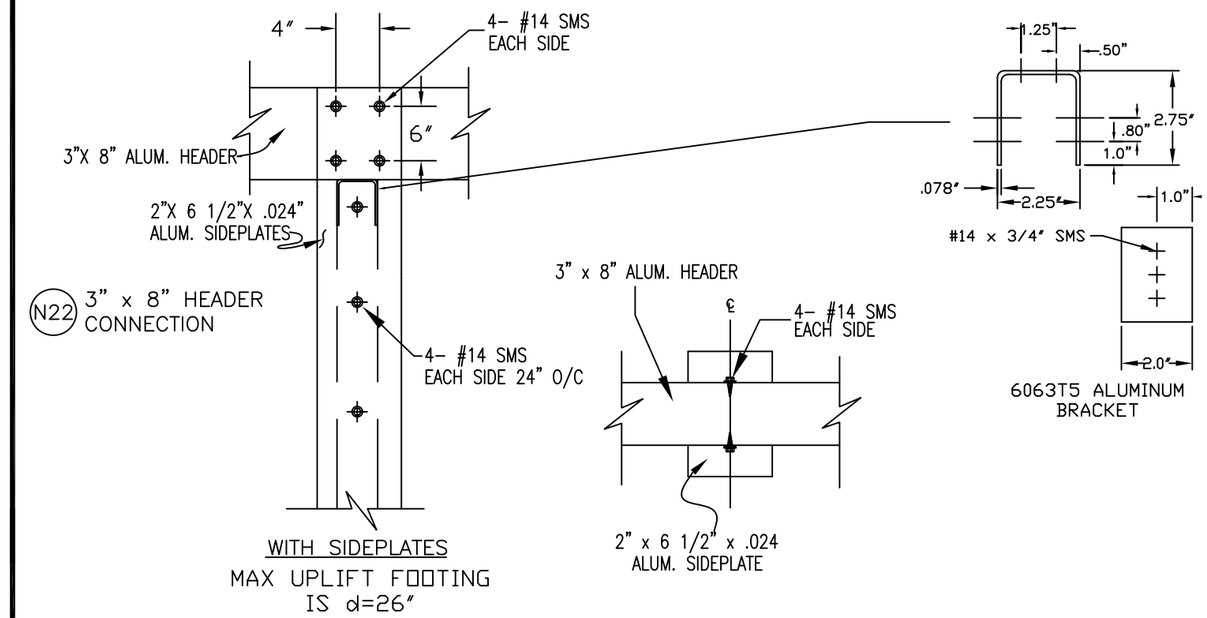

N22 3" x 8" HEADER CONNECTION

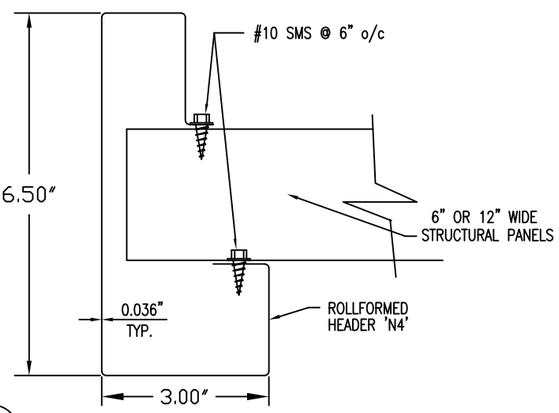

N23 ROLLFORMED HEADER 'N4' CONN. DETAILS TO STRUCTURAL PANELS

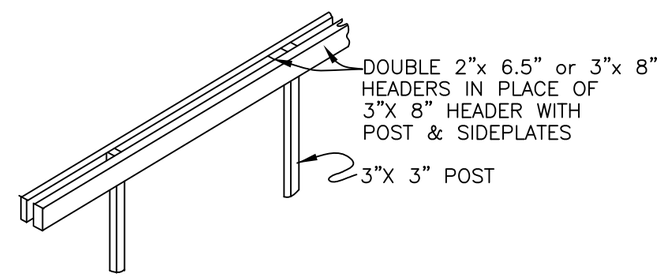

N25 DOUBLE 2"X6.625" HEADERS (DETAIL N31)
DOUBLE 3"X8" HEADER (DETAIL N30)

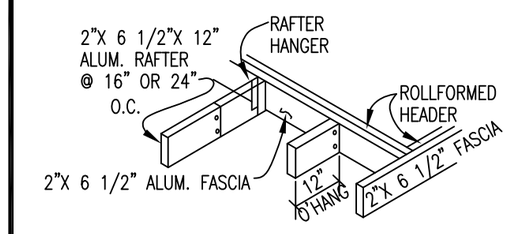

N28 ALTERNATE-DECORATIVE FASCIA TRIM

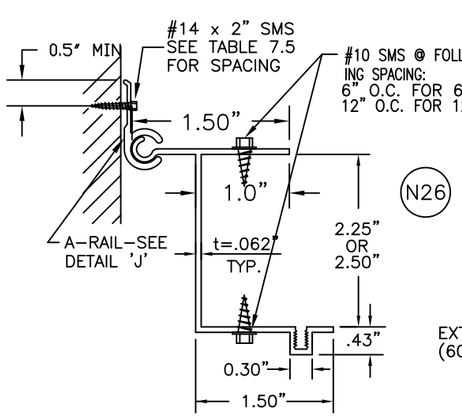

N26

MAX LOADS
10 PSF 140 MPH EXP C
30 PSF 140 MPH EXP B
20 PSF 135 MPH EXP C
25 PSF 130 MPH EXP C
30 PSF 120 MPH EXP C

EXTRUDED HANGER (6063-T6 ALUM. ALLOY)

ICC ESR 1398 (2015 IBC) 1/12/2017

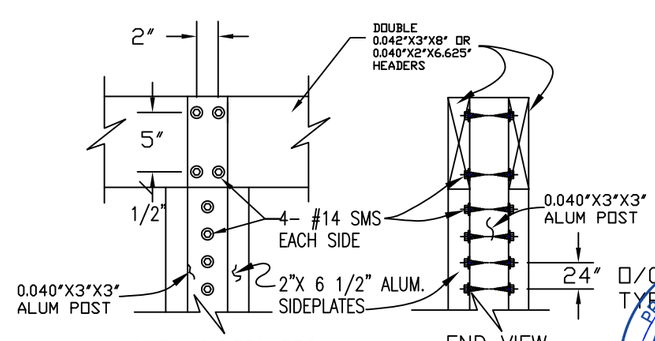

N24 DOUBLE ALUM HEADER CONNECTION

MAX UPLIFT FOOTING SIZE d=31"

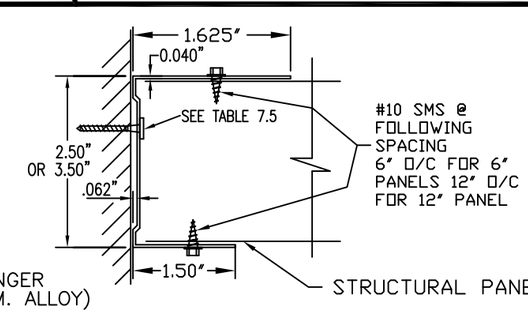

N27 ROLLFORMED HANGER (3004-H34 ALUM. ALLOY)

PROFESSIONAL ENGINEER CARL PUTNAM C 68139 EXP. 6/30/2019 CIVIL STATE OF CALIFORNIA

May 27 2017

Engineer's Stamp

Amerimax EXTERIOR HOME PRODUCTS
28921 US Hwy 74
Romoland, CA 92585

DRAWN BY: BEJ/CP	TYPE:	
SCALE: NTS	NAME: Component Parts & Connection Details for Newport Patio Structures	
DATE:	FILE#: NP03-2015	SHEET: 3 of 4

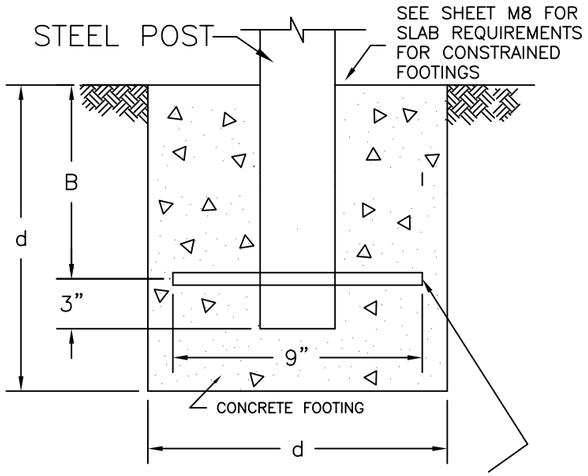

3/8" x 9" STEEL REBAR EMBEDDED AT "B"
d < 33" B = 9"
d < 38" B = 12"
d < 46" B = 18"

N29 FREESTANDING OR ATTACHED POST/FOOTING CONNECTION

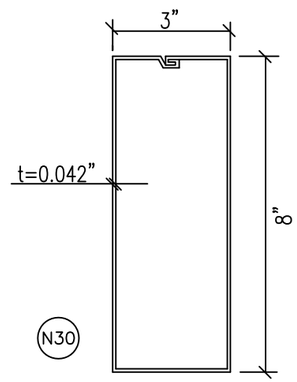

N30

HEADER
(3004-H34 ALUM. ALLOY)

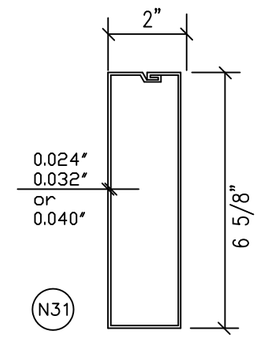

N31

RAFTER & SIDEPLATES
(3004-H34 ALUM. ALLOY)

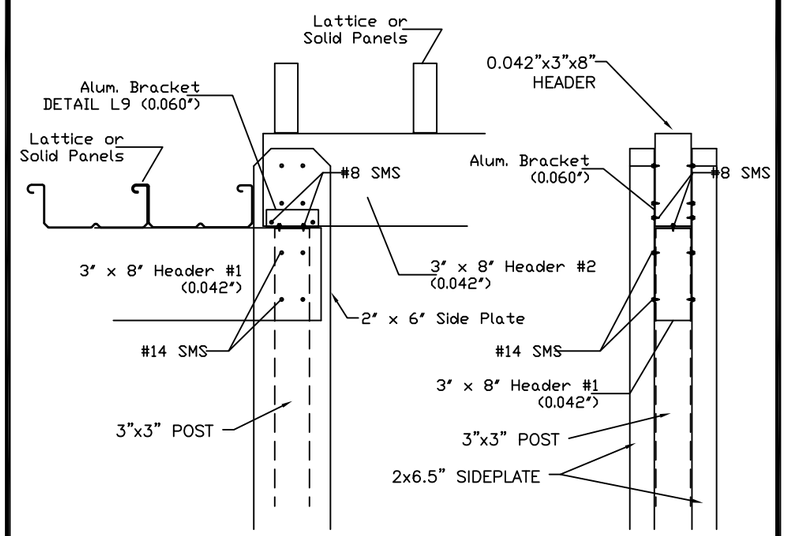

N32 ALTERNATIVE SPLICE FOR ATTACHED UNITS

MAXIMUM UPLIFT FOOTING IS d=26"

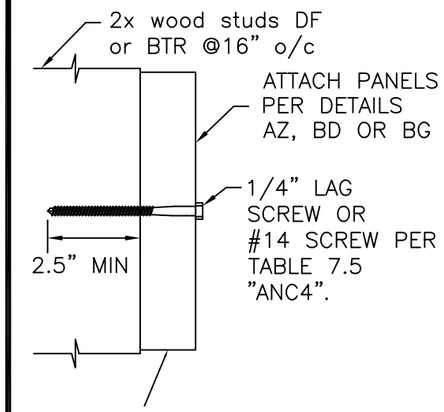

CONTINUOUS 2x DF WOOD LEDGER OR PROVIDE SIMPSON STRONG TIE MSTA36 (ICC ESR 2105 AT SPLICE LOCATION)
COVER W/ 0.019" ALUMINUM

N34 LEDGER BOARD ATTACHMENT

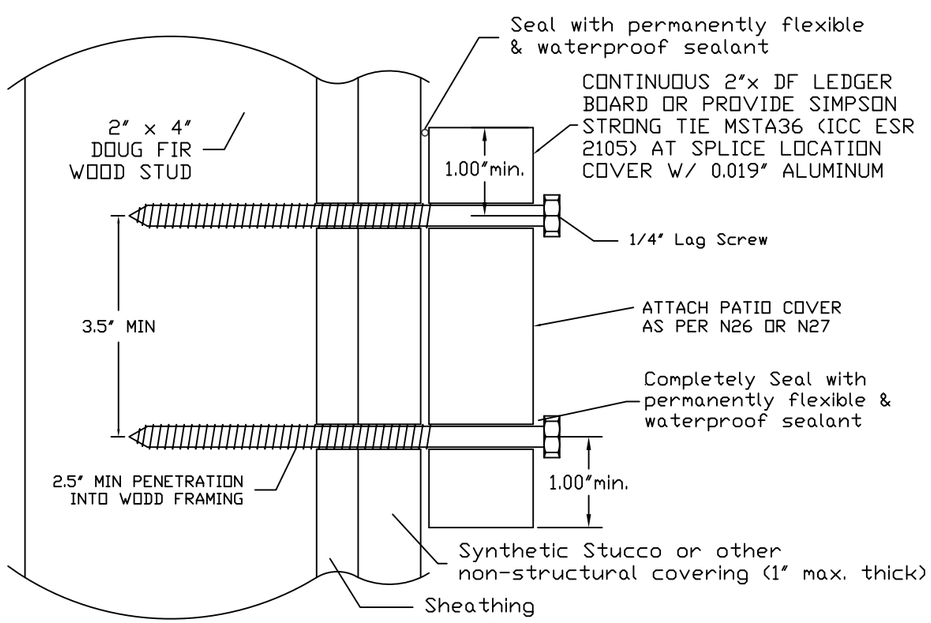

SEE ALLOWABLE DISTANCE TO FIRST ROW OF POSTS IN TABLE 7.7

N33 STUCCO ATTACHMENT DETAIL W/ LEDGER BOARD

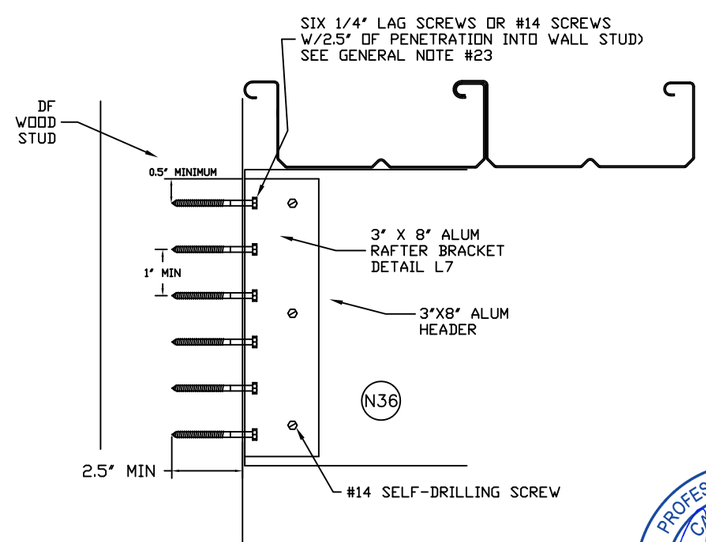

POST ALTERNATIVE FOR SLAB ATTACHMENT
MAX WIND LOAD IS 120 MPH EXP B

PROFESSIONAL ENGINEER
CARL PUTNAM
C 68139
EXP. 6/30/2019
CIVIL
STATE OF CALIFORNIA

May 27 2017
Engineer's Stamp

Amerimax EXTERIOR HOME PRODUCTS
28921 US Hwy 74
Romoland, CA 92585

DRAWN BY: BEJ/CP	TYPE:	
SCALE: NTS	NAME: Component Parts & Connection Details for Newport Patio Structures	
DATE:	FILE#: NP04-2015	SHEET: 4 of 4

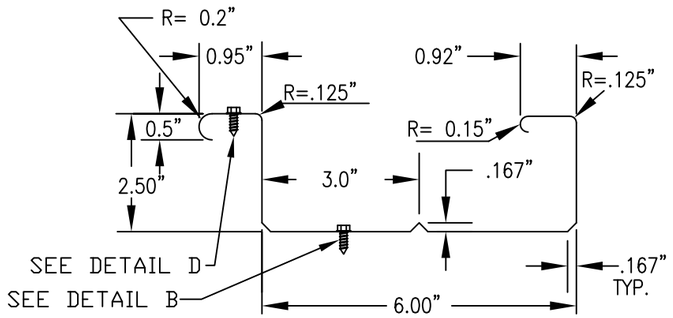

(A) 2.5"x6" SUPER SIX PANEL
t = 0.018" 3004H36
t >0.018" 3004H34

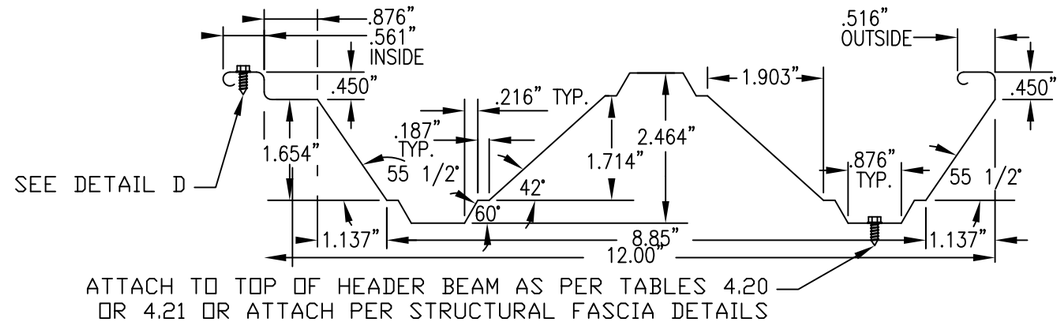

(B) 2.5"X12" MARK X ALUMINUM PANEL
0.018"-0.032" 3004 H36
0.036" 3004 H34

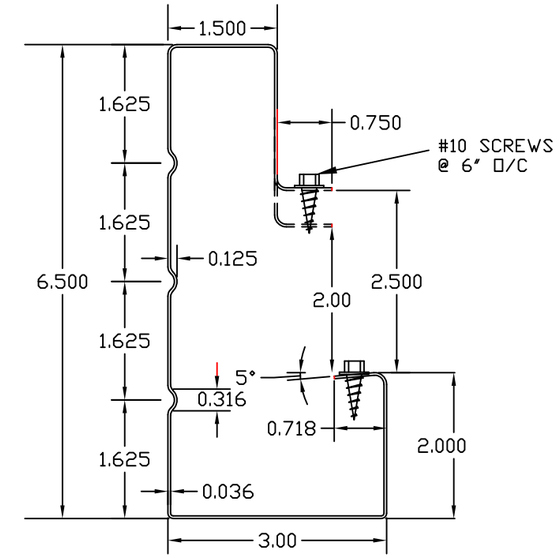

(E) 6 1/2" ROLLFORMED FASCIA 3004H34 ALLOY

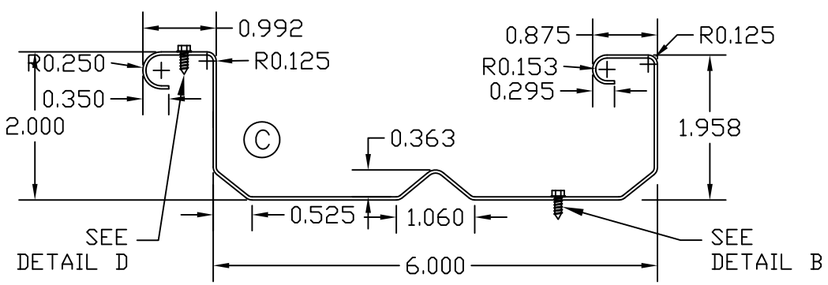

2"x6" FLAT PANEL
t = 0.018" 3004H36 ALUMINUM
t > 0.018" 3004H34 ALUMINUM

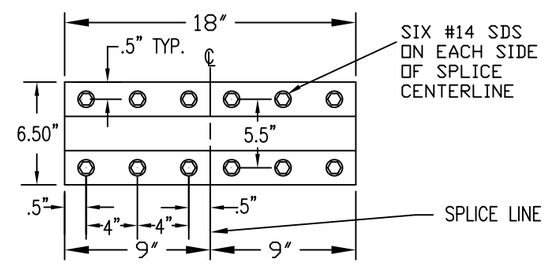

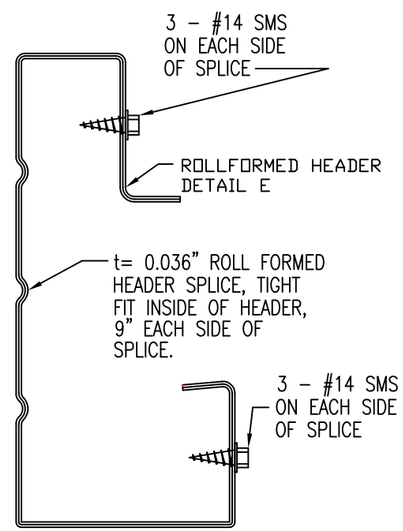

(F) ROLLFORMED HEADER SPLICE
(3004-H34 ALUM. ALLOY)

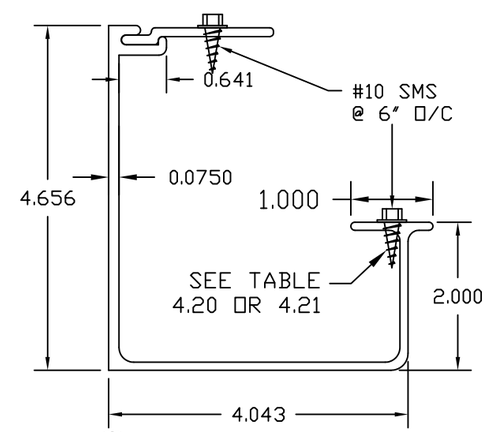

(G) CALIFORNIA FASCIA
(6063-T6 ALUM. ALLOY)

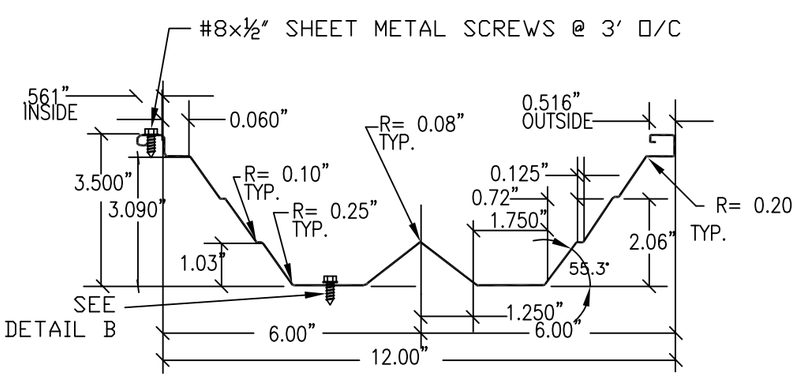

(D) 3.5"x12" "W" PANEL
t = 0.018" 3004H36 ALUMINUM
t > 0.018" 3004H34 ALUMINUM

PROFESSIONAL ENGINEER
CARL PUTNAM
C 68139
EXP. 6/30/2019
CIVIL
STATE OF CALIFORNIA

May 27 2017
Engineer's Stamp

Amerimax
EXTERIOR HOME PRODUCTS
28921 US Hwy 74
Romoland, CA 92585

DRAWN BY: BEJ/CP	TYPE:	
SCALE: NTS	NAME: Component Parts & Connection Details	
DATE:	FILE#: CD01-2015	SHEET: 1 of 9

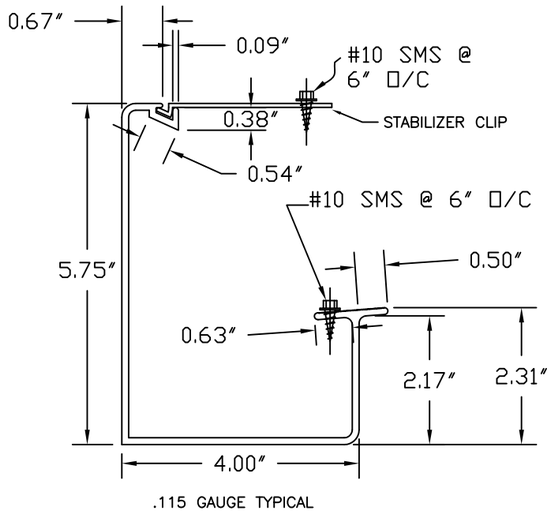

(H) CLASSIC FASCIA
W/ STABLIZER CLIP
(6061–T6 Alum. Alloy)

NOTE:
HEADER SPLICE MUST BE LOCATED WITHIN 12" OF A POST.

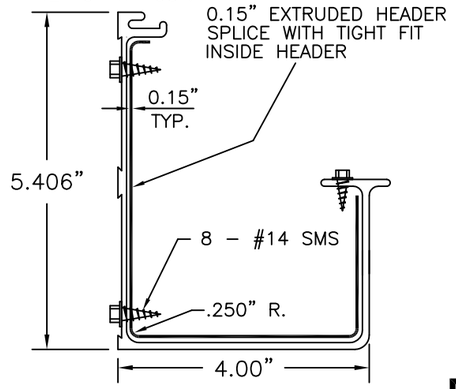

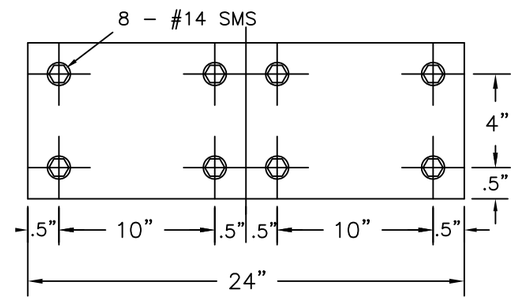

(I) ALASKAN HEADER SPLICE
(6063–T5 ALUM. ALLOY)

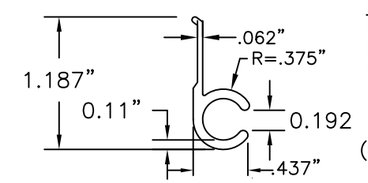

NOTE:
SEE DETAIL 'BB'
FOR EXTRUDED
HANGER W/ A–RAIL

(J) A–RAIL
(6063–T6 ALUM. ALLOY)

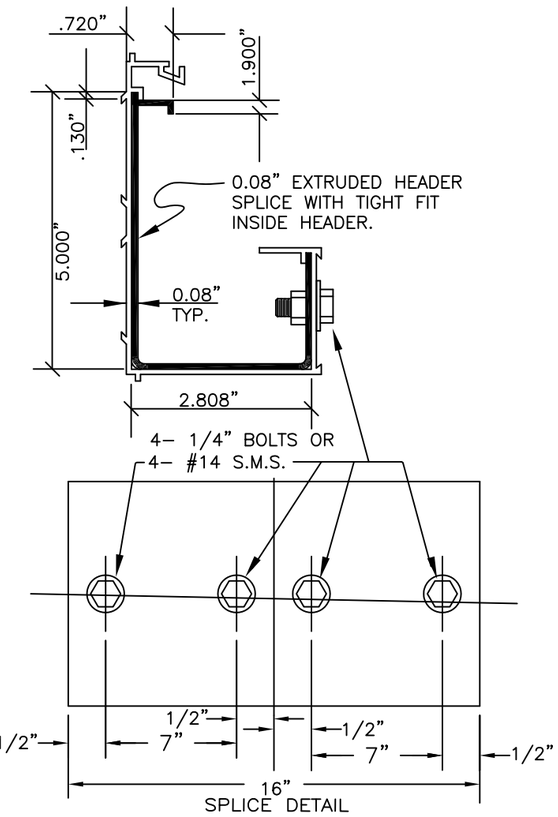

(N) 5 ½″ EXTRUDED HEADER SPLICE
6063T5 ALUMIMUM ALLOY

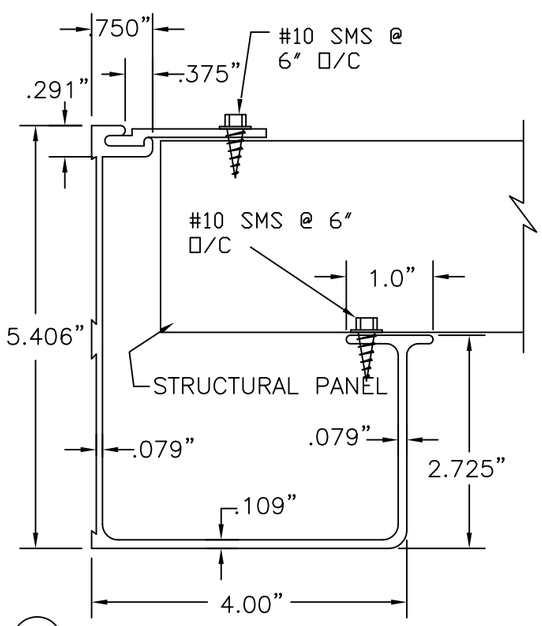

(K) ALASKAN HEADER
(6105–T5 ALUM. ALLOY)

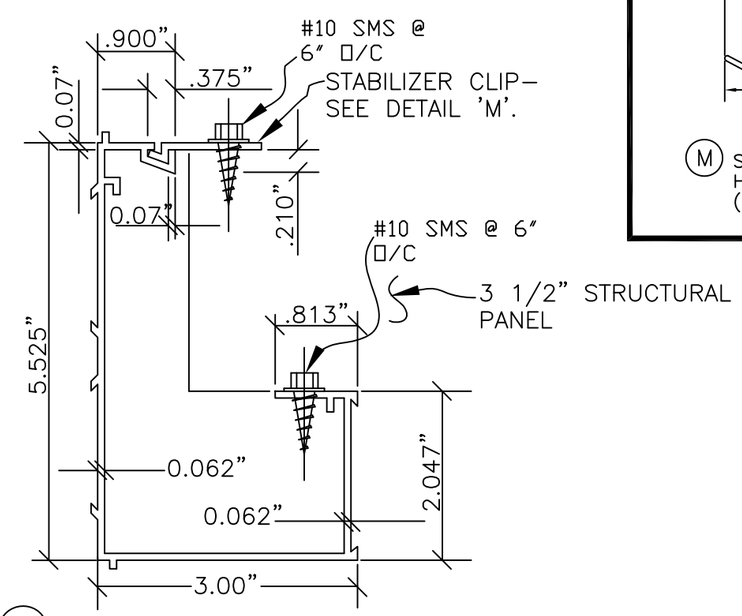

(L) 5 1/2″ EXTRUDED HEADER
(6105–T5 ALUM. ALLOY)

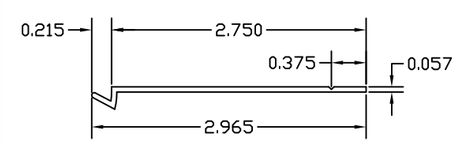

(M) STABILIZER CLIP FOR EXTRUDED
HEADERS 'H' & 'L'
(6063–T6 ALUM. ALLOY)

PROFESSIONAL ENGINEER
CARL PUTNAM
C 68139
EXP. 6/30/2019
CIVIL
STATE OF CALIFORNIA

May 27 2017
Engineer's Stamp

Amerimax
EXTERIOR HOME PRODUCTS
28921 US Hwy 74
Romoland, CA 92585

DRAWN BY: BEJ/CP	TYPE:	
SCALE: NTS	NAME: Component Parts & Connection Details	
DATE:	FILE#: CD02–2015	SHEET: 2 of 9

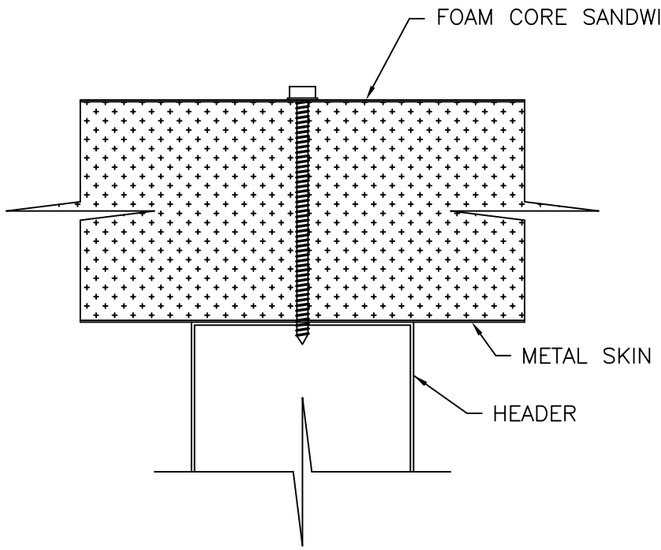

USE OF FOAM CORE SANDWICH PANELS WILL REQUIRE A REGISTERED DESIGN PROFESSIONAL TO COMPLY WITH CURRENT ICC ESR

(O) SANDWICH PANEL TO HEADER CONNECTION

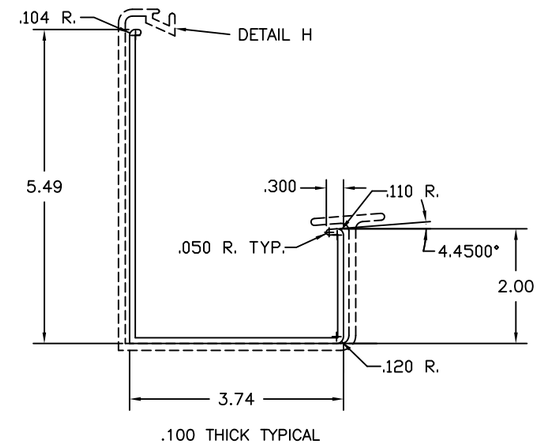

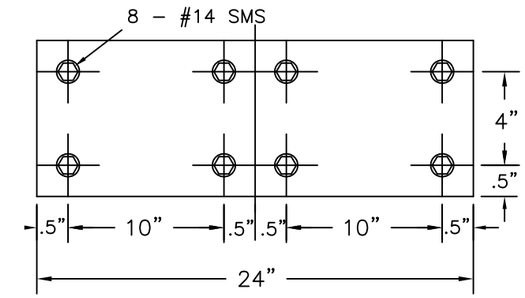

(P) CLASSIC ALASKAN HEADER SPLICE (6063 T5 ALUM. ALLOY)

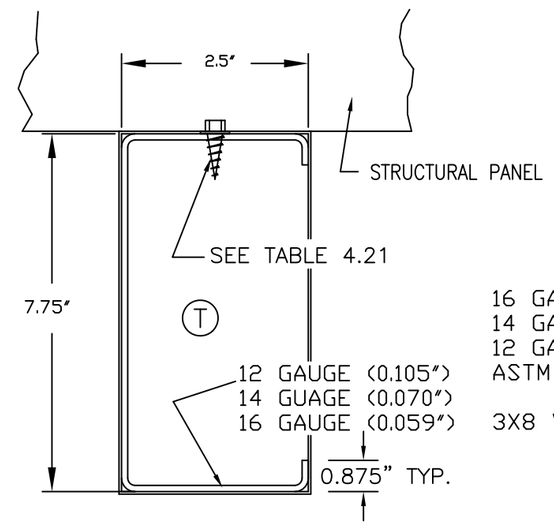

16 GA (t=0.059") 3"X8" STEEL HEADER
14 GA (t=0.070") 3"X8" STEEL HEADER
12 GA (t=0.105") 3"X8" STEEL HEADER
ASTM A653 GRADE 50

3X8 WRAP REQUIRED AS PER DETAIL AW

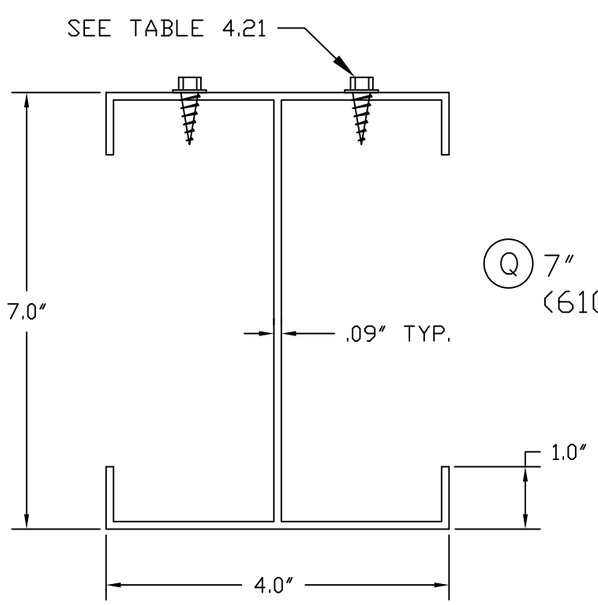

(Q) 7" x 4" I BEAM HEADER (6105-T5 ALUM. ALLOY)

PROFESSIONAL ENGINEER
CARL PUTNAM
C 68139
EXP. 6/30/2019
CIVIL
STATE OF CALIFORNIA

May 27 2017
Engineer's Stamp

Amerimax EXTERIOR HOME PRODUCTS
28921 US Hwy 74
Romoland, CA 92585

DRAWN BY: BEJ/CP	TYPE:	
SCALE: NTS	NAME: Component Parts & Connection Details	
DATE:	FILE#: CD03-2015	SHEET: 3 of 9

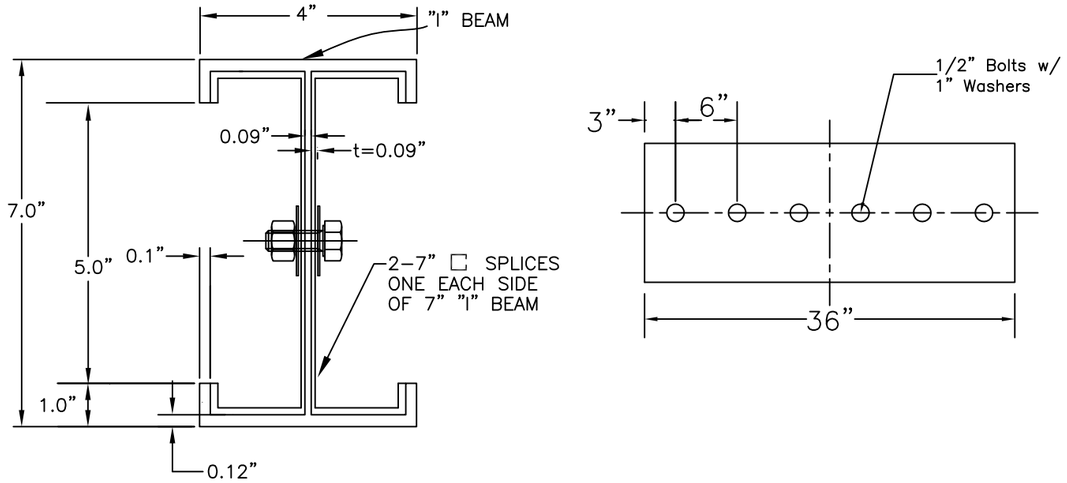

7" X 4" I-BEAM SPLICE
(6105-T5 ALUM. ALLOY)

(U) 7" X 4" ALUM. I-BEAM FULL STRENGTH SPLICE BOLT LAYOUT

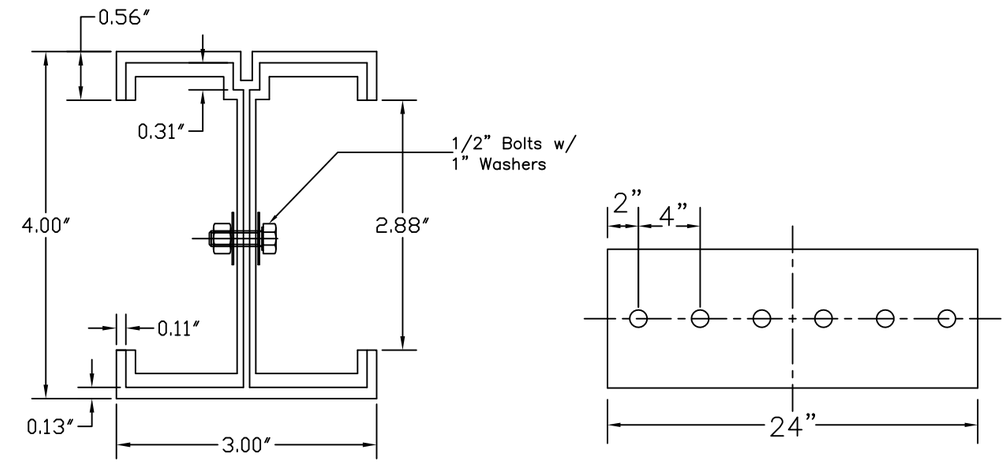

(X) 4"X3" I BEAM FULL STRENGTH
SPLICE BOLT LAYOUT
6063-T6 ALUMINUM ALLOY

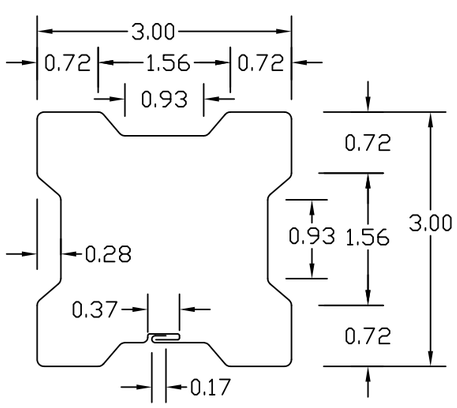

t = 0.041"

(W) 3" X 3" CLOVERLEAF HEADER
(A-653 Fy=40 KSI STEEL)

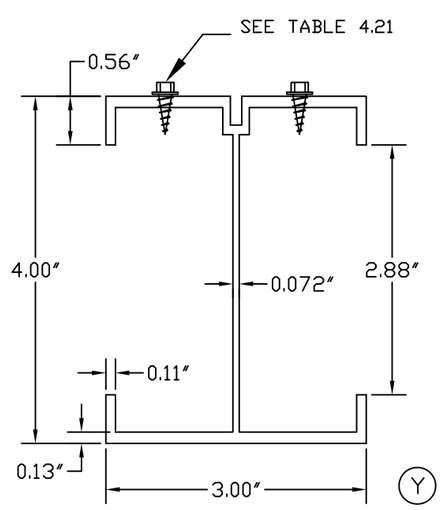

(Y) 4"x3" I BEAM
6063-T6 ALUM

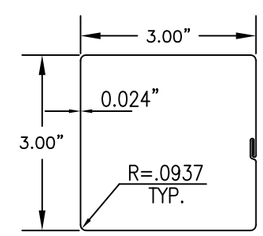

(Z) 3" SQUARE POST
(3004-H34 ALUM. ALLOY)

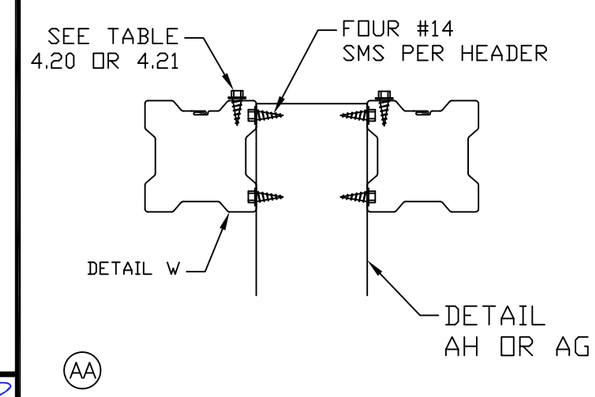

(AA)

DOUBLE STEEL CLOVERLEAF HEADER
ASTM A653 GRADE 40

PROFESSIONAL ENGINEER
CARL PUTNAM
C 68139
EXP. 6/30/2019
CIVIL
STATE OF CALIFORNIA

May 27 2017
Engineer's Stamp

Amerimax EXTERIOR HOME PRODUCTS
28921 US Hwy 74
Romoland, CA 92585

DRAWN BY: BEJ/CP	TYPE:	
SCALE: NTS	NAME: Component Parts & Connection Details	
DATE:	FILE#: CD04-2015	SHEET: 4 of 9

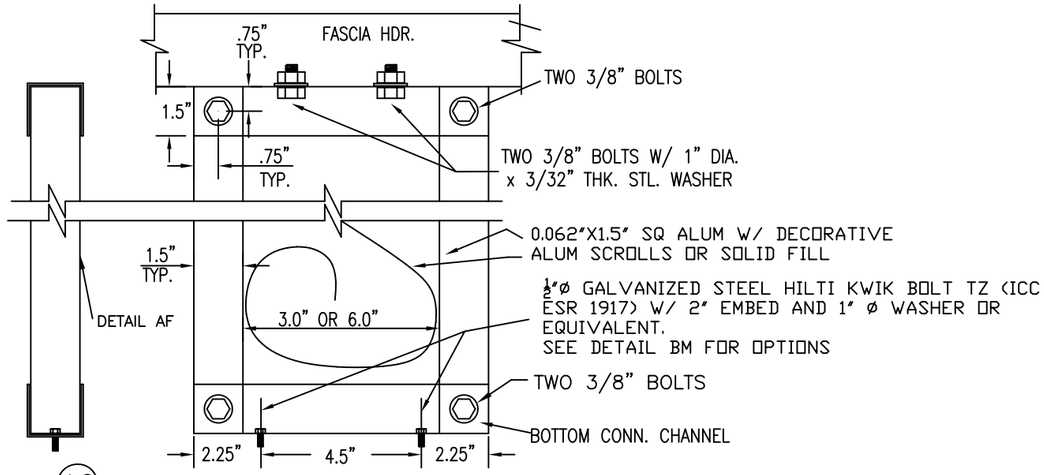

AC SCROLL POST CONNECTION TO CONCRETE SLAB OR FOOTING
BRACKET = 6063 T6 ALUM ALLOY
POST = DETAIL AF
ONLY USABLE FOR SINGLE SPAN ATTACHED UNITS

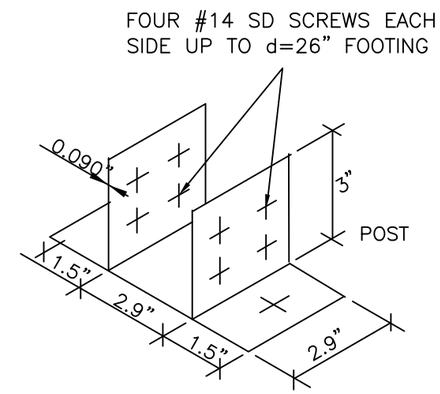

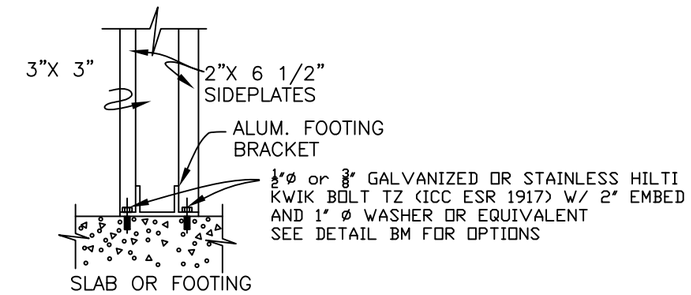

AD ALUMINUM FOOTING BRACKET FOR CONNECTING TO CONCRETE SLAB OR FOOTING
6063 T6 ALUM ALLOY
ONLY USABLE FOR SINGLE SPAN ATTACHED UNITS

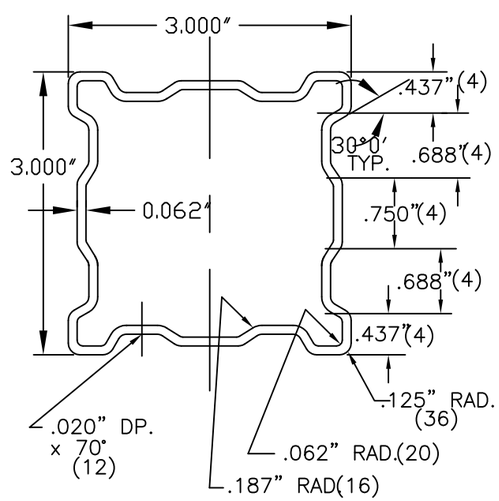

AE COLONIAL POSTS
(3" ALUM. 6063-T6)
"t" = 0.062" UNLESS OTHERWISE NOTED

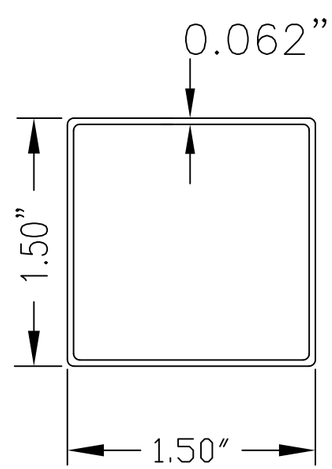

AF TWIN 1.5" SQ. X .062"
EXTRUDED POST
(ALUM. 6063-T6)

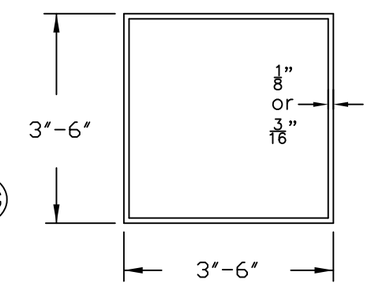

AG 3", 4", 5" or 6" ASTM A500
GRADE B STEEL POST
SEE GENERAL NOTE #9 FOR
CORROSION PROTECTION

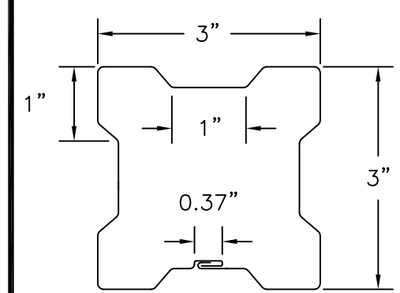

t (IN)= 0.030, 0.040 (ALUM)
= 0.041 (STEEL)

AH 3" ALUM OR STEEL CLOVERLEAF
POST
(3105 H25 OR ASTM A653 GRADE
40 STEEL)

PROFESSIONAL ENGINEER
CARL PUTNAM
C 68139
EXP. 6/30/2019
CIVIL
STATE OF CALIFORNIA

May 27 2017
Engineer's Stamp

Amerimax EXTERIOR HOME PRODUCTS
28921 US Hwy 74
Romoland, CA 92585

DRAWN BY: BEJ/CP	TYPE:	
SCALE: NTS	NAME: Component Parts & Connection Details	
DATE:	FILE#: CD05-2015	SHEET: 5 of 9

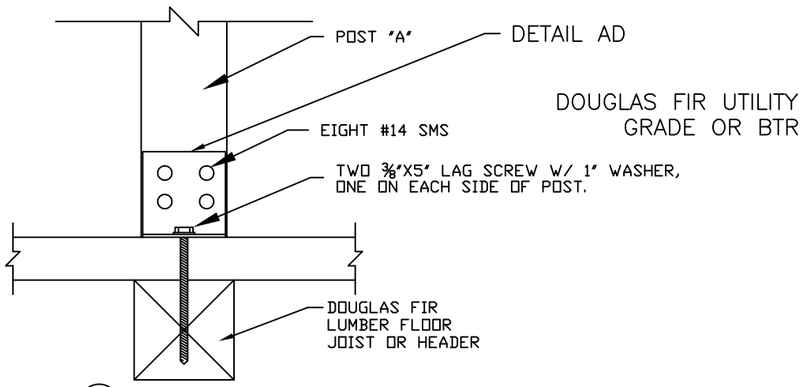

(AL) ATTACHED STRUCTURE POST TO FLOOR JOIST

POST SPACING IS RESTRICTED TO THE "ON SLAB" SPACING SHOWN IN TABLES 5.1, 5.5, 5.6, 5.7, 5.8, 6.1, 6.5, 6.6, 6.7 OR 6.8.

SOLID COVERS MUST USE THESE RESTRICTIONS
FOR 10 PSF SNOW/LIVE LOAD
MAXIMUM WINDSPEED IS
150 MPH EXP B
120 MPH EXP C

FOR 20 PSF OR GREATER SNOW/LIVE LOAD
MAXIMUM WINDSPEED IS
150 MPH EXP C

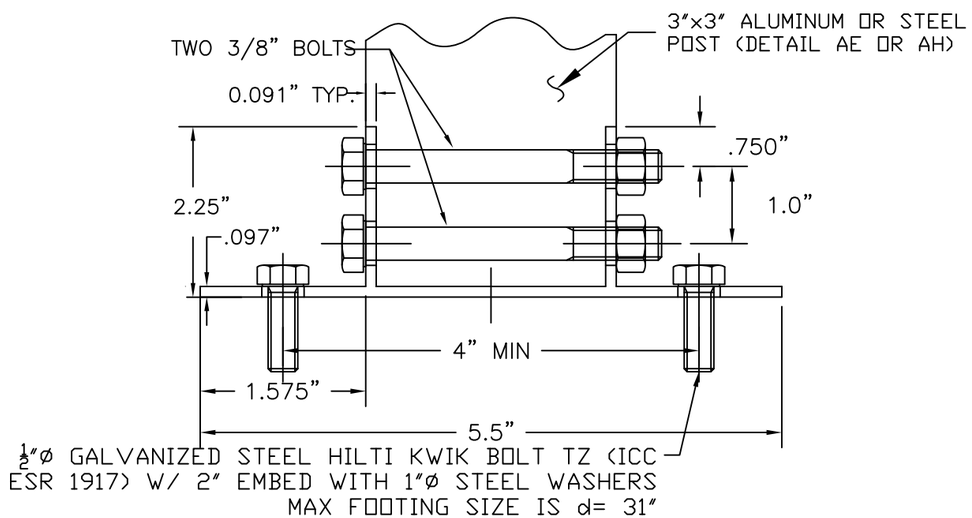

(AP) POST TO FOOTING ATTACHMENT DETAIL
SINGLE SPAN ATTACHED UNITS ONLY

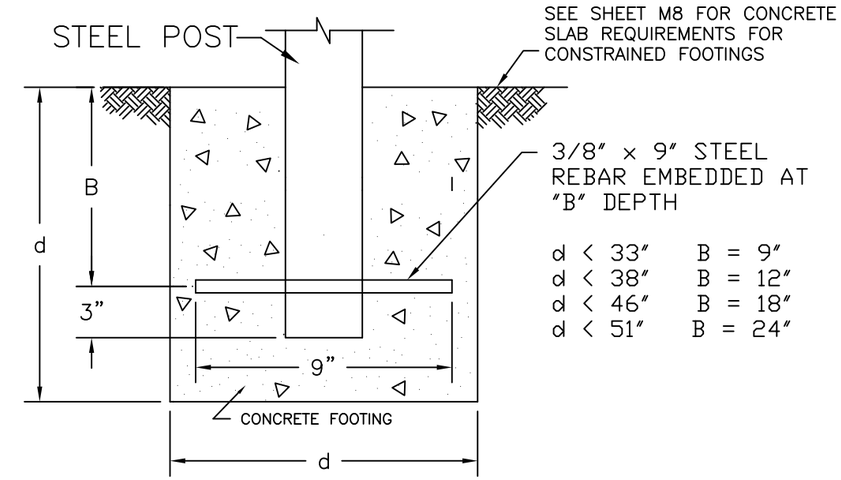

(AQ) FREESTANDING OR ATTACHED STRUCTURE COLUMN TO FOOTING CONNECTION DETAIL

PROFESSIONAL ENGINEER
CARL PUTNAM
C 68139
EXP. 6/30/2019
CIVIL
STATE OF CALIFORNIA

May 27 2017
Engineer's Stamp

Amerimax EXTERIOR HOME PRODUCTS
28921 US Hwy 74
Romoland, CA 92585

DRAWN BY: BEJ/CP	TYPE:	
SCALE: NTS	NAME: Component Parts & Connection Details	
DATE:	FILE#: CD06-2015	SHEET: 6 of 9

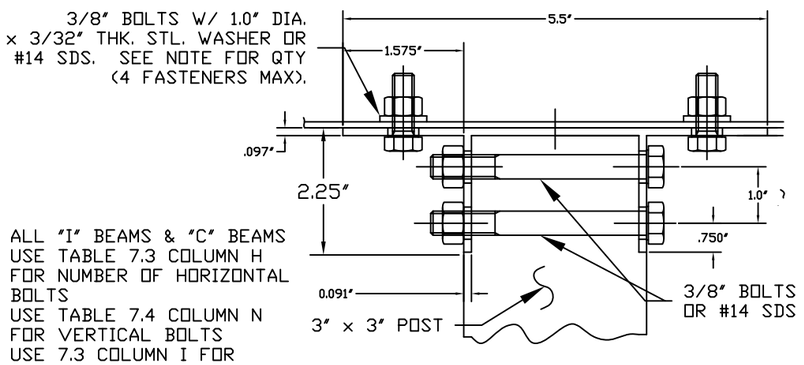

ALL "I" BEAMS & "C" BEAMS
USE TABLE 7.3 COLUMN H FOR NUMBER OF HORIZONTAL BOLTS
USE TABLE 7.4 COLUMN N FOR VERTICAL BOLTS
USE 7.3 COLUMN I FOR HORZONTAL #14 SDS
USE TABLE 7.4 COLUMN L FOR VERTICAL #14 SDS
(SDS= SELF DRILLING SCREW)
4 FASTENERS MAX

(AR) ALTERNATE 3" SQ. POST CONNECTOR BRACKET (6063–T6 ALUM. ALLOY)

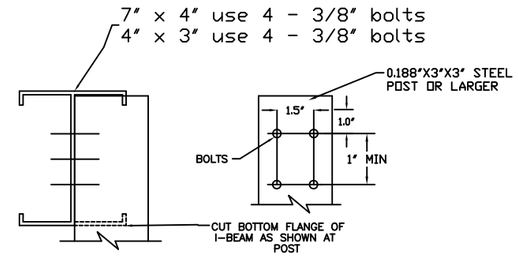

(AS) ALTERNATE – I BEAM TO POST CONECTION

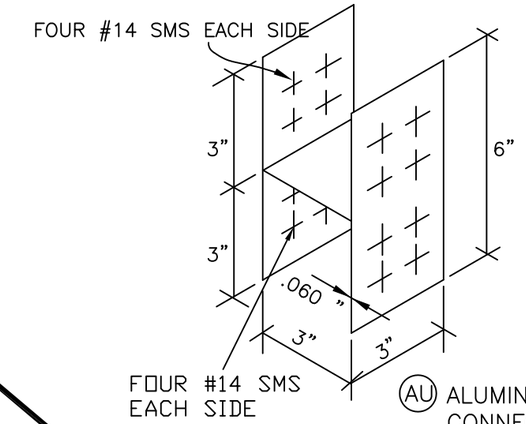

(AU) ALUMINUM 'H' BRACKET FOR CONNECTING COLUMN TO HEADER (6063–T5 ALUM. ALLOY)

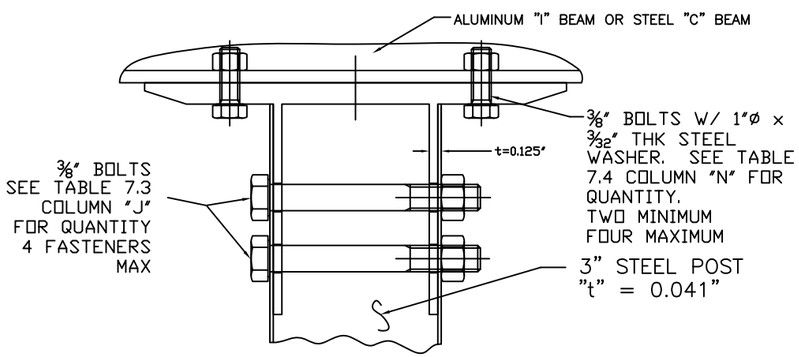

(AT) 3" STEEL POST TO HEADER CONN. BRACKET (6063–T6 ALUM.)

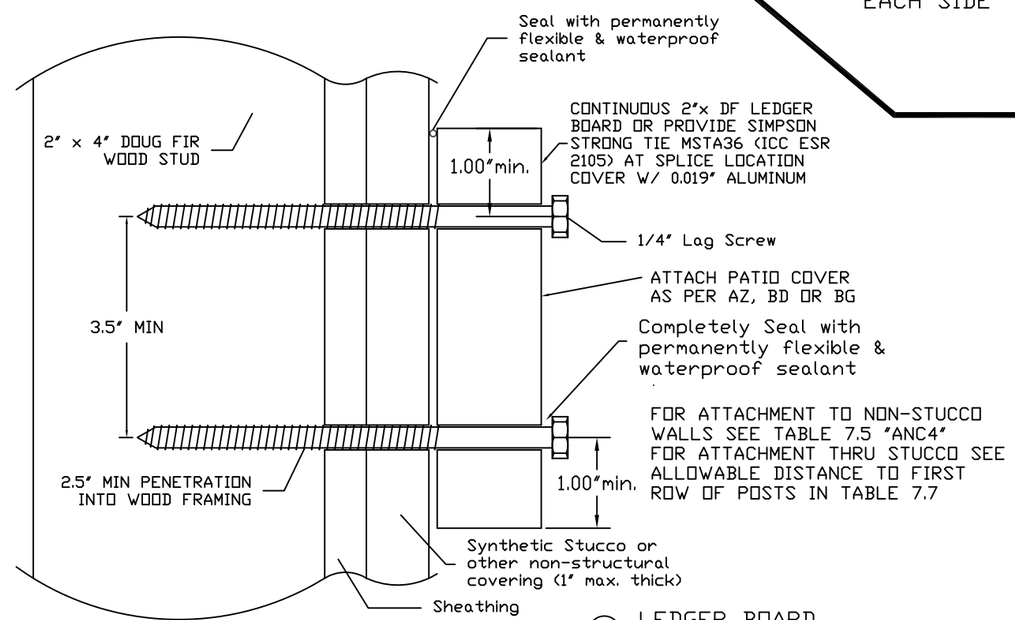

(AV) LEDGER BOARD ATTACHMENT DETAIL

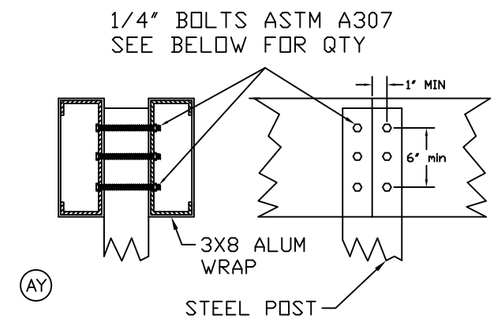

(AY) DOUBLE OR SINGLE 3"X8" STEEL C BEAM. BOLT LAYOUT FOR SPLICED AND NON-SPLICE ATTACHMENT

Beam Type	Req'd # of 1/4" bolts
All C Beams "On Slab"	4
Single Steel Inserts 3x8 C	4
Double 16G Steel C (except 60 psf)	4
Double 16 G Steel (60 psf)	5
Double 14 G	5
Double 12 G	7

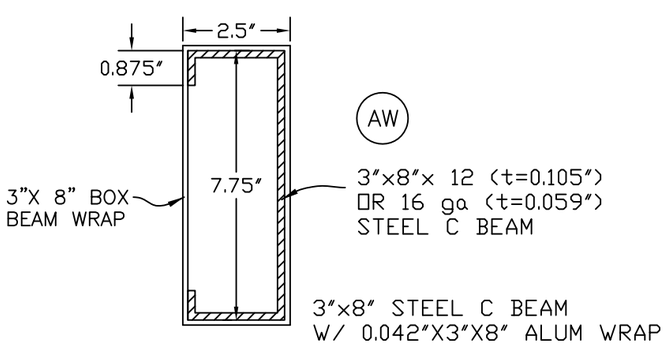

(AW)

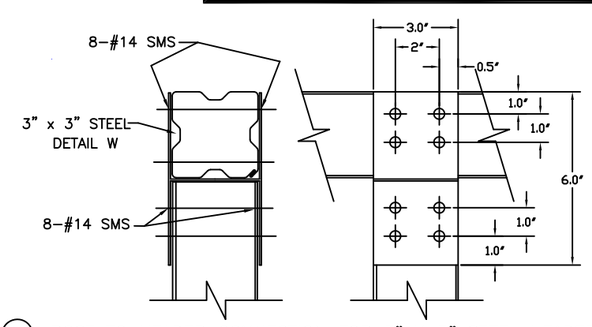

(AX) POST TO HEADER CONNECTION FOR 3" X 3" STEEL HEADER "W"

PROFESSIONAL ENGINEER
CARL PUTNAM
C 68139
EXP. 6/30/2019
CIVIL
STATE OF CALIFORNIA

May 27 2017
Engineer's Stamp

Amerimax EXTERIOR HOME PRODUCTS
28921 US Hwy 74
Romoland, CA 92585

DRAWN BY: BEJ/CP	TYPE:	
SCALE: NTS	NAME: Component Parts & Connection Details	
DATE:	FILE#: CD07–2015	SHEET: 7 of 9

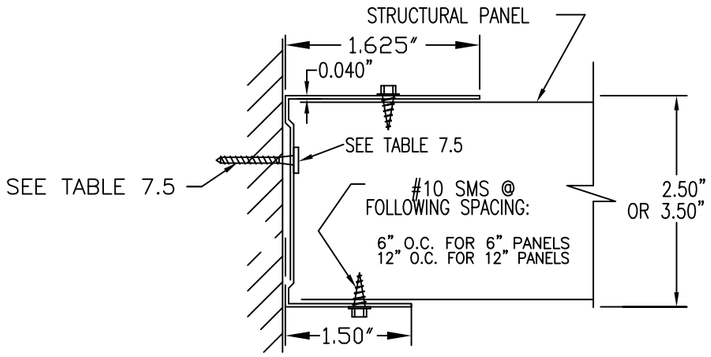

(AZ) ROLLFORMED HANGER
(3004–H34 ALUM. ALLOY)

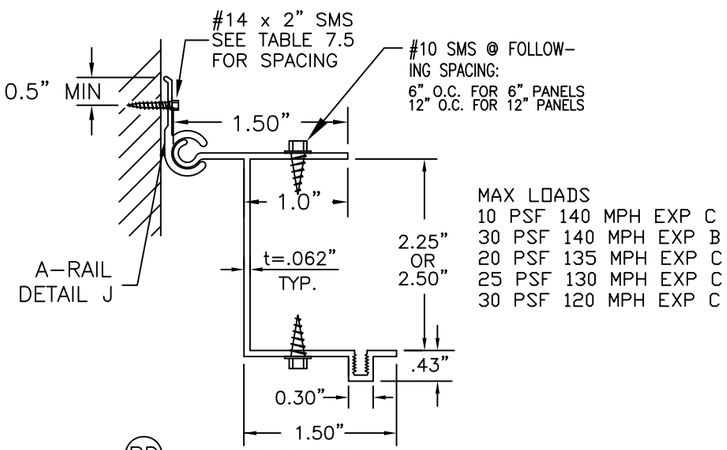

MAX LOADS
10 PSF 140 MPH EXP C
30 PSF 140 MPH EXP B
20 PSF 135 MPH EXP C
25 PSF 130 MPH EXP C
30 PSF 120 MPH EXP C

(BD) EXTRUDED HANGER
(6063–T6 ALUM. ALLOY)

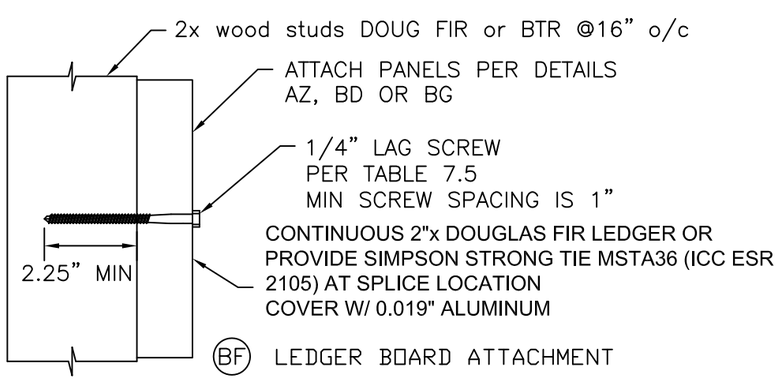

(BF) LEDGER BOARD ATTACHMENT

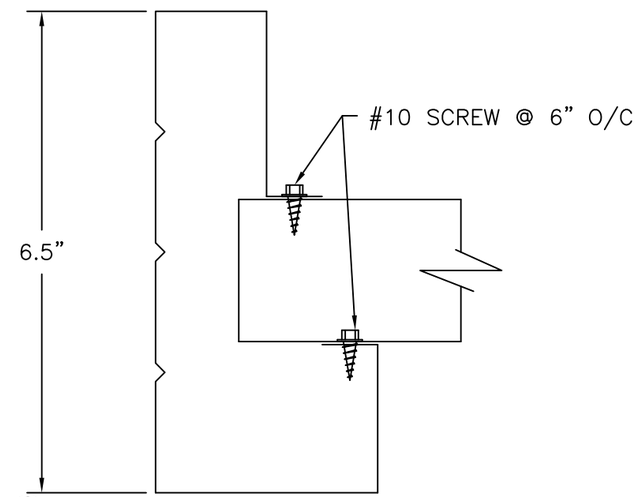

(BE) ROLLFORMED HEADER 'E' CONN.
DETAILS TO STRUCTURAL PANELS

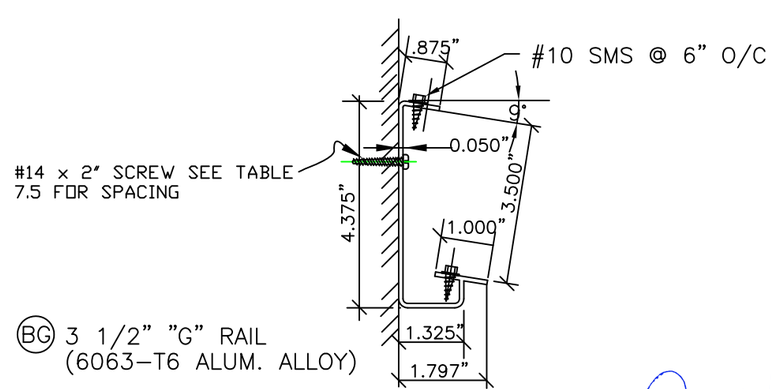

(BG) 3 1/2" "G" RAIL
(6063–T6 ALUM. ALLOY)

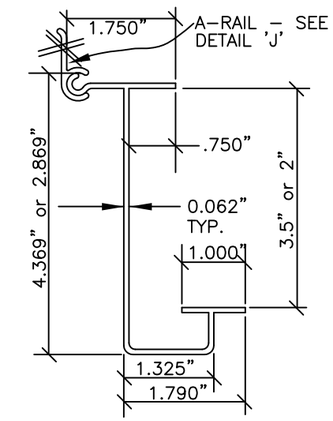

(BB) 3 1/2" "J" HANGER
(6063–T6 ALUM. ALLOY)

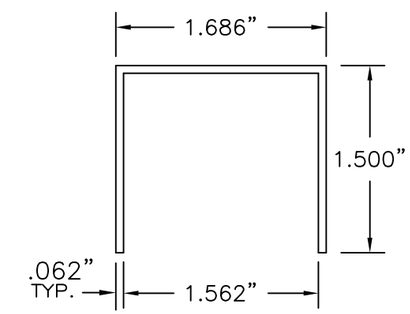

(BH) EXTRUDED CHANNEL CONNECTOR
(6063–T6 ALUM. ALLOY)

PROFESSIONAL ENGINEER
CARL PUTNAM
C 68139
EXP. 6/30/2019
CIVIL
STATE OF CALIFORNIA

May 27 2017
Engineer's Stamp

Amerimax
EXTERIOR HOME PRODUCTS
28921 US Hwy 74
Romoland, CA 92585

DRAWN BY: BEJ/CP	TYPE:
SCALE: NTS	NAME: Component Parts & Connection Details
DATE:	FILE#: CD08–2015 / SHEET: 8 of 9

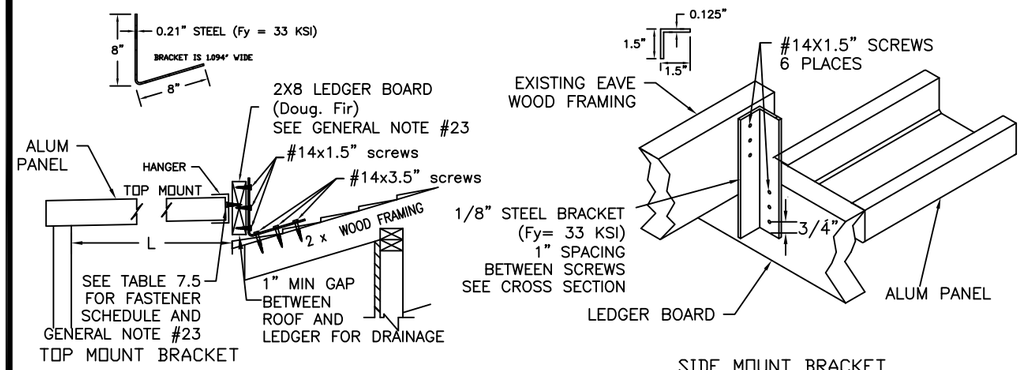

EAVE OVERHANG AND "L"
MUST COMPLY WITH
DETAIL BN ALSO

(BI) ALTERNATE EAVE ATTACHMENTS

Live Load (psf)	Wind Speed and Exposure	MAX "L" FOR TOP OR SIDE MOUNT 16" o/c	24"o/c
10	110 mph Exp B	19'-4"	12'-10"
	115 mph Exp B	17'-10"	11'-10"
	130 mph Exp B	14'-2"	9'-6"
	140 mph Exp B	12'-4"	8'-2"
	110 mph Exp C	16'-2"	10'-9"
	115 mph Exp C	14'-10"	9'-10"
20	130 mph Exp C	11'-4"	7'-6"
	140 mph Exp C	10'-3"	6'-10"

ALL HOUSE PENETRATIONS MUST BE COMPLETELY AND PERMANENTLY SEALED
NOT ALLOWED IN SNOW LOAD AREAS
SEE GENERAL NOTE #9 FOR CORROSION PROTECTION

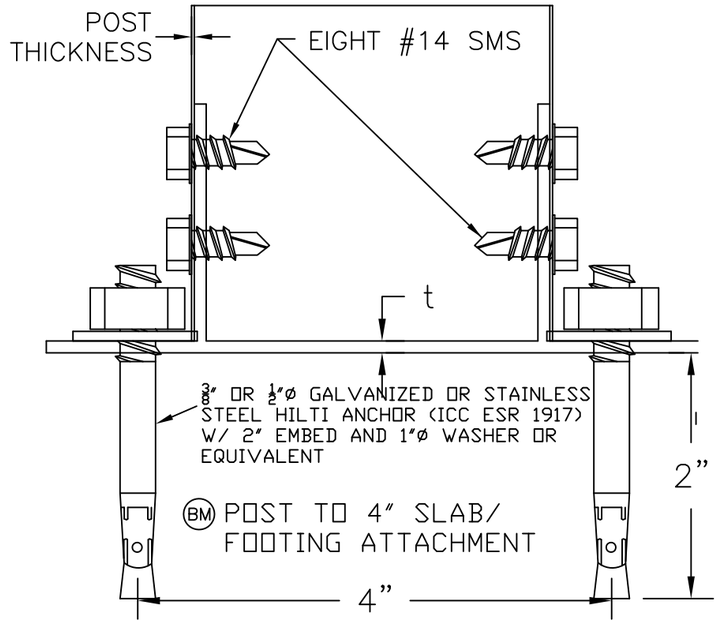

ALUMINUM BRACKET 6063T6
t = 0.090" >> SLAB ATTACH FOR 140 EXP C
t = 0.090" >> FOOTING d = 31" MAX
t = 0.160" >> FOOTING d = 37" MAX WITH DETAIL AH
STEEL POST

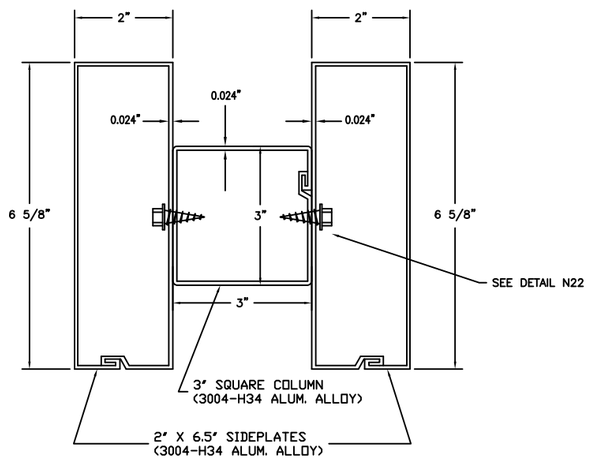

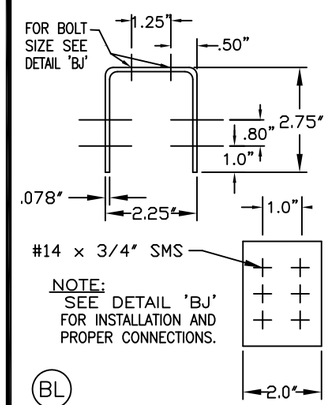

6063T6 ALUMINUM
BRACKET

Live/Snow Load Solid Cover Wind (psf)	RAFTER SIZE (24" O/C)	MAX DISTANCE TO FIRST ROW OF POSTS "L" EAVE OVERHANG 6"	12"	18"	24"	30"	# of #14 Screws
10 110 MPH EXP B	2x4	17'-8"	15'-4"	8'-10"	5'-3"	2'-9"	3
	2x6	17'-8"	17'-8"	17'-8"	17'-8"	12'-8"	
	2x8	17'-8"	17'-8"	17'-8"	17'-8"	17'-8"	
10 110 MPH EXP C	2x4	17'-8"	13'-6"	7'-9"	4'-7"	2'-5"	3
	2x6	17'-8"	17'-8"	17'-8"	15'-6"	11'-1"	
	2x8	17'-8"	17'-8"	17'-8"	17'-8"	17'-8"	
10 115 MPH EXP B	2x4	17'-8"	14'-6"	8'-4"	4'-11"	2'-7"	3
	2x6	17'-8"	17'-8"	17'-8"	16'-8"	11'-11"	
	2x8	17'-8"	17'-8"	17'-8"	17'-8"	17'-8"	
10 115 MPH EXP C	2x4	17' 8"	12' 8"	7' 4"	4' 4"	2' 3"	3
	2x6	17'-8"	17'-8"	17'-8"	14'-7"	10'-5"	
	2x8	17'-8"	17'-8"	17'-8"	17'-8"	17'-8"	
10 130 MPH EXP C	2x4	17' 8"	10' 7"	6' 1"	3' 7"	1' 10"	4
	2x6	17' 8"	17' 8"	17' 6"	12' 2"	8' 8"	
	2x8	17'-8"	17'-8"	17'-8"	17'-8"	17'-2"	
10 140 MPH EXP C	2x4	17'-8"	9'-4"	5'-3"	3'-0"	1'-5"	4
	2x6	17'-8"	17'-8"	15'-6"	10'-8"	7'-6"	
	2x8	17' 8"	17' 8"	17' 8"	17' 8"	15' 1"	
20 110 MPH EXP C	2x4	15'-6"	10'-4"	5'-11"	3'-6"	1'-10"	4
	2x6	15'-6"	15'-6"	15'-6"	11'-10"	8'-6"	
	2x8	15'-6"	15'-6"	15'-6"	15'-6"	15'-6"	
20 115 MPH EXP C	2x4	15'-6"	9'-9"	5'-7"	3'-3"	1'-7"	4
	2x6	15'-6"	15'-6"	15'-6"	11'-2"	8'-0"	
	2x8	15'-6"	15'-6"	15'-6"	15'-6"	15'-6"	
20 130 MPH EXP C	2x4	15'-6"	8'-4"	4'-8"	2'-8"	1'-1"	4
	2x6	15'-6"	15'-6"	13'-10"	9'-5"	6'-7"	
	2x8	15'-6"	15'-6"	15'-6"	15'-6"	13'-5"	
25 115 MPH EXP C	2x4	15'-6"	9'-8"	5'-5"	3'-1"	1'-8"	4
	2x6	15'-6"	15'-6"	15'-6"	10'-11"	7'-9"	
	2x8	15'-6"	15'-6"	15'-6"	15'-6"	15'-6"	
25 130 MPH EXP C	2x4	15' 6"	8' 2"	4' 6"	2' 5"	1' 0"	4
	2x6	15'-6"	15'-6"	13'-7"	9'-3"	6'-5"	
	2x8	15'-6"	15'-6"	15'-6"	15'-6"	13'-1"	
25 140 MPH EXP C	2x4	15'-6"	7'-4"	4'-0"	2'-1"	0'-8"	4
	2x6	15' 6"	15' 6"	12' 3"	8' 3"	5' 7"	
	2x8	15'-6"	15'-6"	15'-6"	15'-6"	11'-9"	
30 115 MPH EXP C	2x4	14'-9"	8'-8"	4'-10"	2'-8"	1'-2"	4
	2x6	14'-9"	14'-9"	14'-5"	9'-10"	6'-11"	
	2x8	14' 9"	14' 9"	14' 9"	14' 9"	14' 0"	
30 130 MPH EXP C	2x4	14'-9"	7'-6"	4'-1"	2'-1"	0'-9"	4
	2x6	14'-9"	14'-9"	12'-0"	8'-5"	5'-9"	
	2x8	14' 9"	14' 9"	14' 9"	14' 9"	11' 11"	
30 140 MPH EXP C	2x4	14'-9"	6'-9"	3'-7"	1'-9"	0'-5"	4
	2x6	14'-9"	14'-9"	11'-4"	7'-6"	5'-1"	
	2x8	14'-9"	14'-9"	14'-9"	14'-8"	10'-9"	
35.7 115 MPH EXP C	2x4	14'-3"	7'-8"	4'-3"	2'-3"	0'-10"	4
	2x6	14'-3"	14'-3"	12'-10"	8'-8"	5'-11"	
	2x8	14'-3"	14'-3"	14'-3"	14'-3"	12'-4"	
35.7 140 MPH EXP C	2x4	14' 1"	6' 3"	3' 3"	1' 8"	0' 3"	5
	2x6	14'-3"	14'-3"	10'-5"	6'-10"	4'-6"	
	2x8	14'-3"	14'-3"	14'-3"	13'-6"	9'-10"	
42 130 MPH EXP C	2x4	13' 8"	6' 2"	3' 3"	1' 8"	0' 3"	5
	2x6	13' 8"	13' 8"	10' 4"	6' 10"	4' 6"	
	2x8	13'-8"	13'-8"	13'-8"	13'-5"	9'-9"	
42 140 MPH EXP C	2x4	13'-0"	5'-8"	2'-11"	1'-3"	0'-0"	5
	2x6	13' 8"	13' 8"	9' 6"	6' 2"	4' 0"	
	2x8	13'-8"	13'-8"	13'-8"	12'-4"	8'-11"	
50 130 MPH EXP C	2x4	12'-0"	5'-2"	2'-7"	1'-0"	0'-0"	5
	2x6	12' 8"	12' 8"	8' 9"	5' 7"	3' 6"	
	2x8	12' 8"	12' 8"	12' 8"	11' 4"	8' 1"	
60 140 MPH EXP C	2x4	9'-11"	4'-2"	1'-11"	0'-6"	0'-0"	5
	2x6	11'-8"	11'-8"	7'-0"	4'-4"	2'-6"	
	2x8	11'-8"	11'-8"	11'-8"	9' 1"	6' 4"	

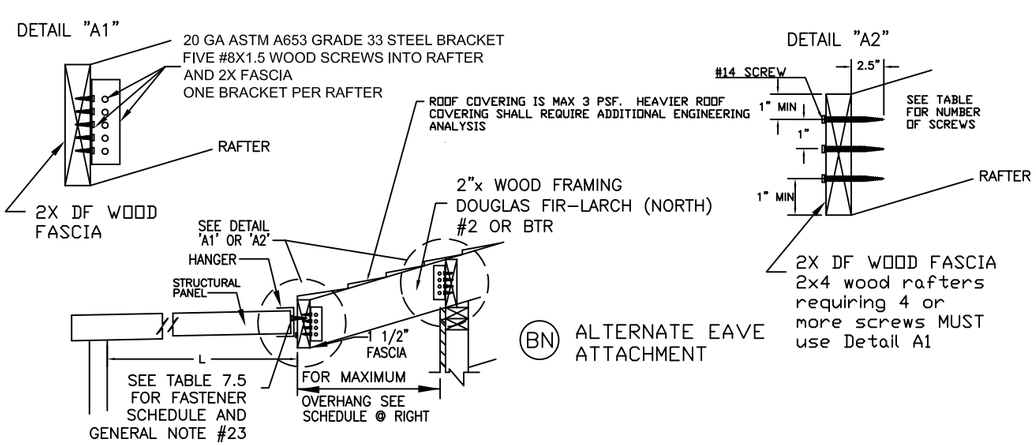

(BN) ALTERNATE EAVE
ATTACHMENT

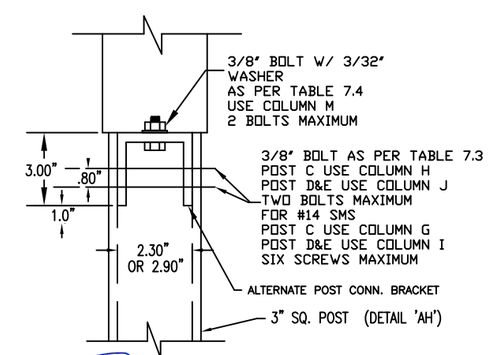

(BJ) 3" POST CONNECTIONS FOR
FASCIA HEADERS

PROFESSIONAL ENGINEER
CARL PUTNAM
C-68139
EXP. 6/30/2019
CIVIL
STATE OF CALIFORNIA

May 27 2017
Engineer's Stamp

Amerimax
EXTERIOR HOME PRODUCTS

28921 US Hwy 74
Romoland, CA 92585

DRAWN BY: BEJ/CP	TYPE:
SCALE: NTS	NAME: Component Parts & Connection Details
DATE:	FILE#: CD09-2015
SHEET: 9 of 9	

ICC ESR 1398 (2015 IBC) 1/12/2017

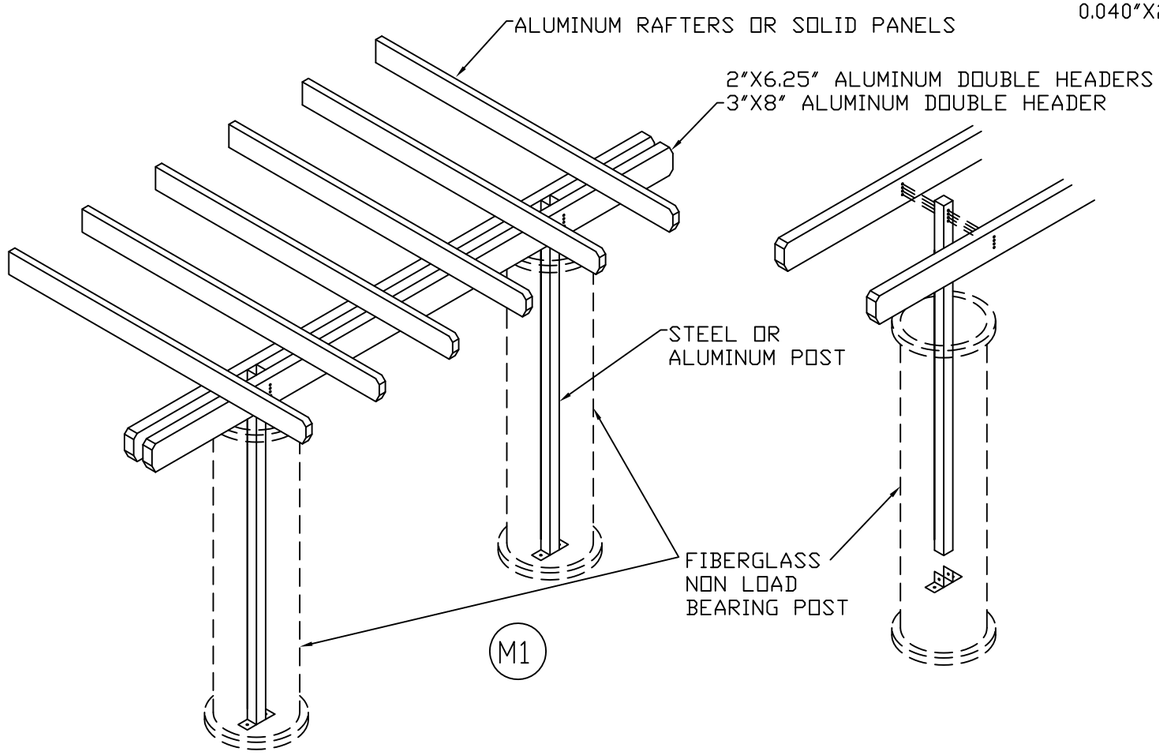

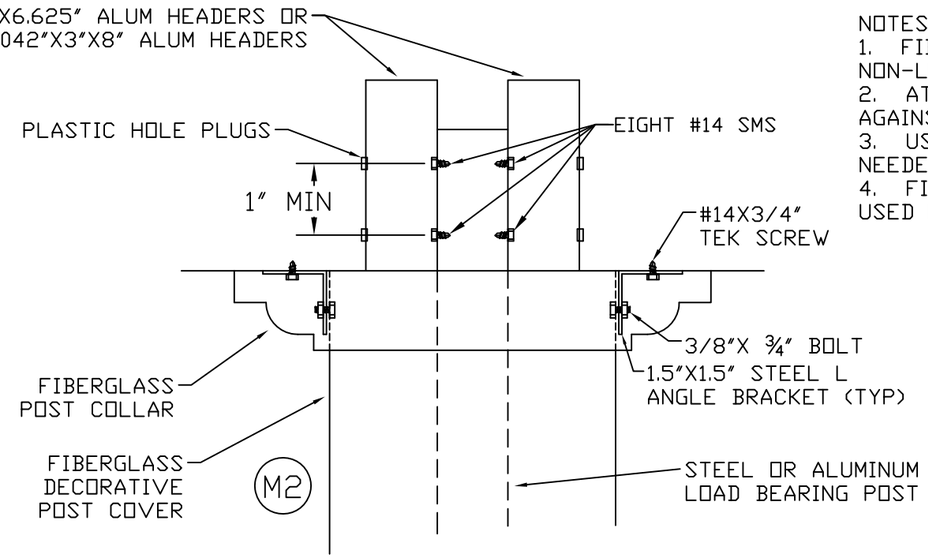

NOTES:
1. FIBERGLASS POSTS ARE NON-LOAD BEARING.
2. ATTACHMENT TO HOLD COVERING AGAINST MINOR LATERAL FORCES.
3. USE MULTIPLE BRACKETS AS NEEDED.
4. FIBERGLASS POSTS MAY BE USED FOR ANY STRUCTURE.

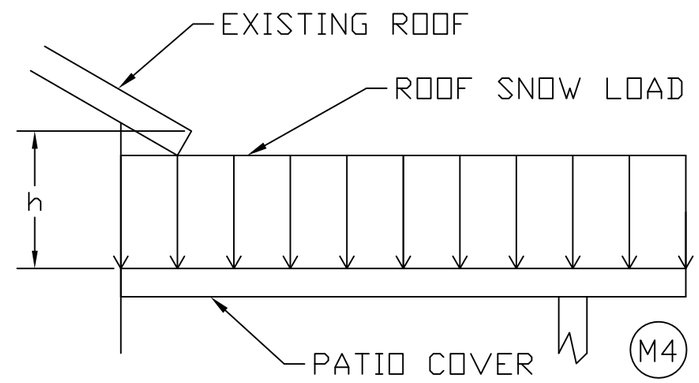

STRUCTURES COMPLYING WITH THIS DETAIL DO NOT REQUIRE ADDITIONAL DRIFTING SNOW CONSIDERATIONS

GROUND SNOW LOAD (PSF)	MAXIMUM "h" (IN)
10	9
15	14
20	17
25	18
30	20
40	25
50	30
60	33

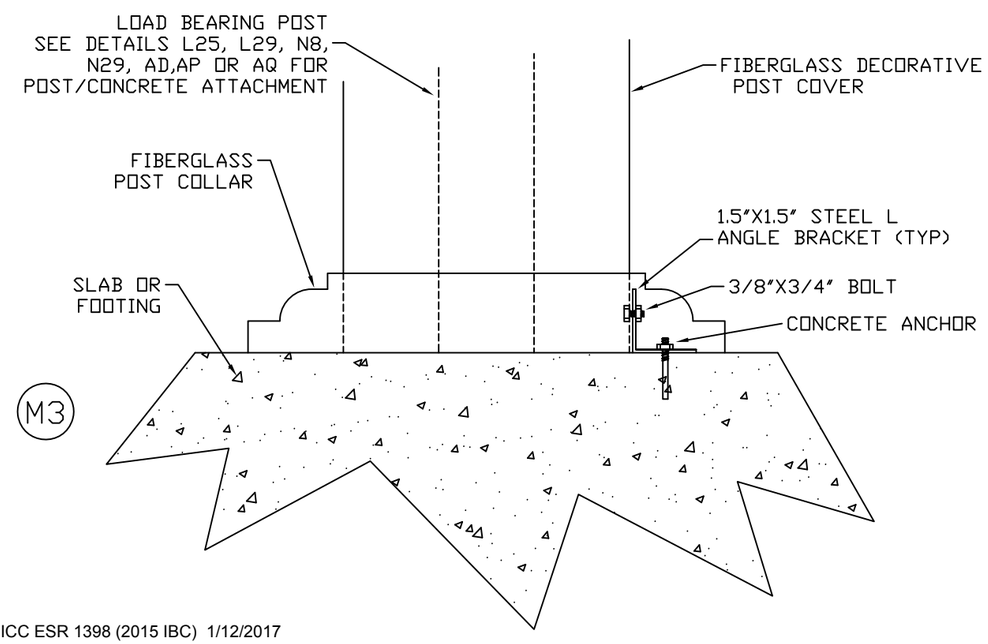

PROFESSIONAL ENGINEER
CARL PUTNAM
C 68139
EXP. 6/30/2019
CIVIL
STATE OF CALIFORNIA

May 27 2017
Engineer's Stamp

Amerimax EXTERIOR HOME PRODUCTS
28921 US Hwy 74
Romoland, CA 92585

DRAWN BY: CP	TYPE:	
SCALE: NTS	NAME: Miscellaneous Details	
DATE:	FILE#: Misc1a-2015	SHEET:

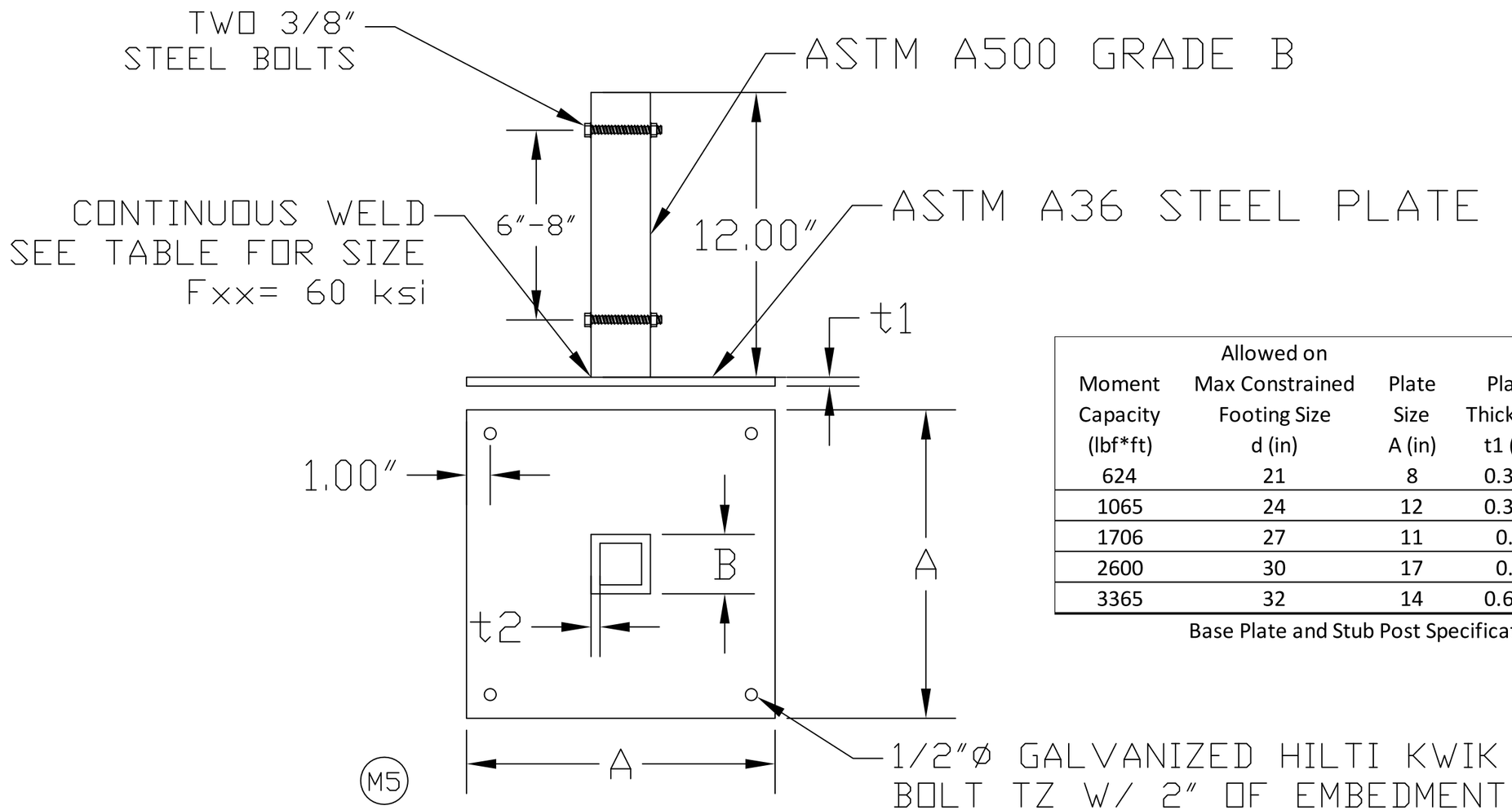

Moment Capacity (lbf*ft)	Allowed on Max Constrained Footing Size d (in)	Plate Size A (in)	Plate Thickness t1 (in)	Stub Post Size B (in)	Stub Post Size t2 (in)	Minimum Weld Size (in)
624	21	8	0.375	2.5	0.188	0.125
1065	24	12	0.375	2.5	0.188	0.125
1706	27	11	0.5	2.5	0.188	0.125
2600	30	17	0.5	2.5	0.25	0.188
3365	32	14	0.625	2.5	0.375	0.25

Base Plate and Stub Post Specifications

WELDED MOMENT RESISTING STEEL BASE PLATE
ALTERNATIVE TO POST EMBEDMENT IN CONCRETE FOOTING
THE WELDED POST BRACKET MUST BE VERIFIED TO
COMPLY WITH THE REQUIREMENTS IN DETAIL M5 OF THESE
PLANS AND FABRICATED IN ACCORDANCE W/ 2015 IBC
SECTION 1704.2.5.1 BY AN APPROVED FABRICATOR TO THE
SATISFACTION OF THE CODE OFFICIAL

PROFESSIONAL ENGINEER
CARL PUTNAM
C 68139
EXP. 6/30/2019
CIVIL
STATE OF CALIFORNIA

May 27 2017
Engineer's Stamp

Amerimax EXTERIOR HOME PRODUCTS
28921 US Hwy 74
Romoland, CA 92585

DRAWN BY: CP	TYPE:	
SCALE: NTS	NAME: Miscellaneous Details	
DATE:	FILE#: Misc1b-2015	SHEET:

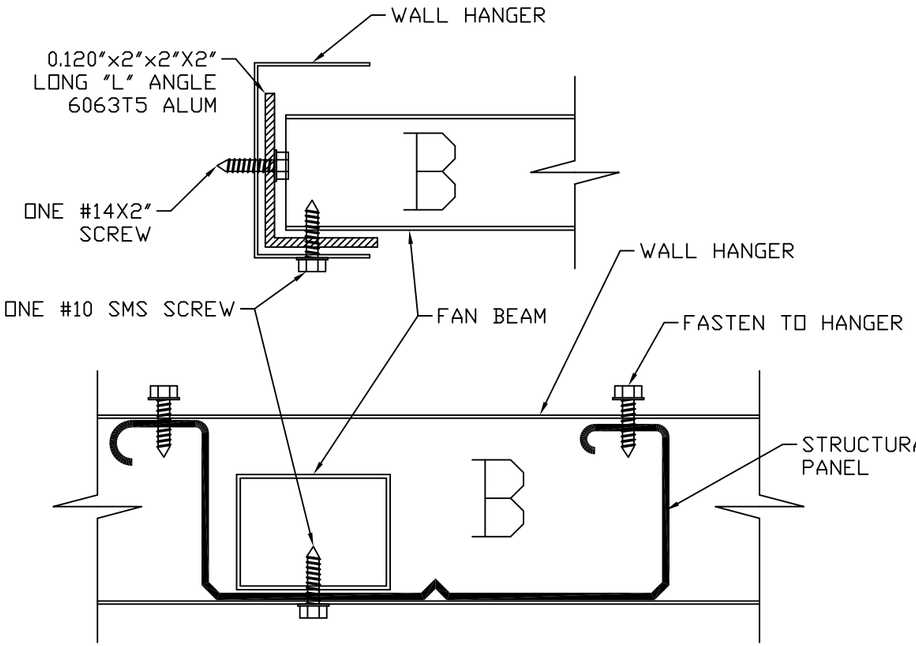

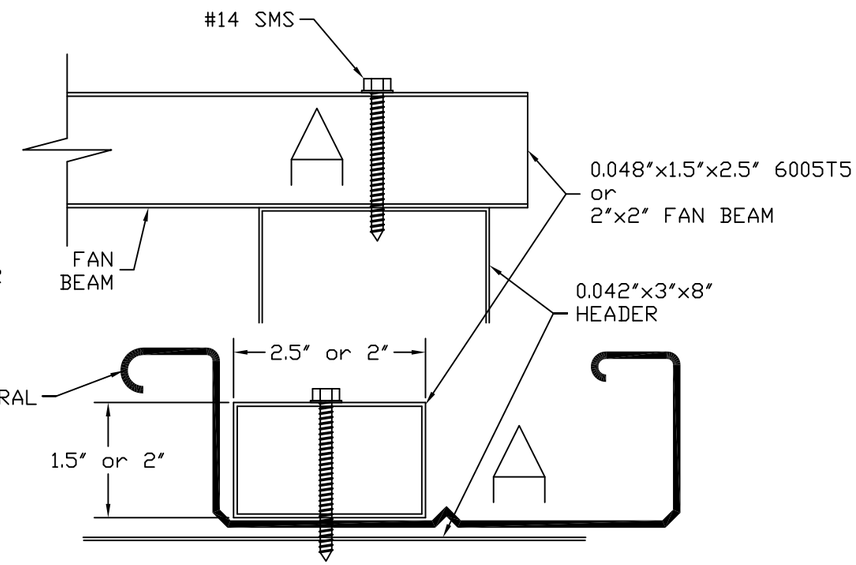

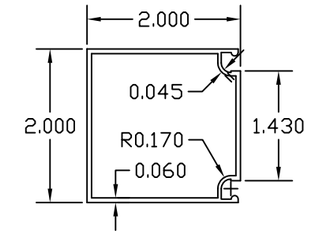

2"X2" FAN BEAM
6063T5 ALUM
NO ORIENTATION
SPECIFIED

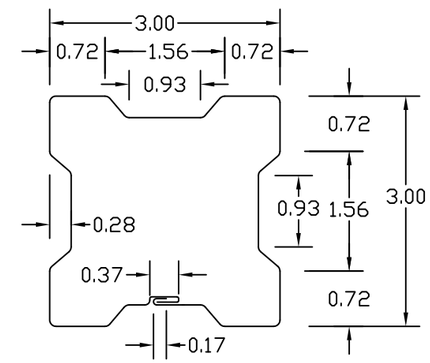

t = 0.041"

3" X 3" CLOVERLEAF HEADER
(A-653 Fy=40 KSI STEEL)

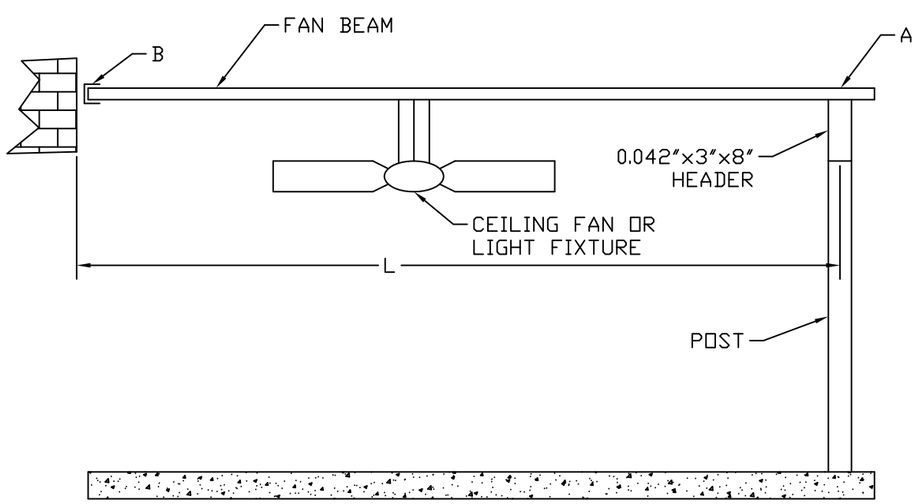

CONFORMANCE TO THE APPLICABLE ELECTRICAL CODE IS OUTSIDE THE SCOPE OF THIS DETAIL AND MUST BE APPROVED SEPERATELY.

Weight of fan/lights	Allowable Fan Beam Spans	
	0.048"x1.5"x2.5"	2"x2" Fan Beam
		3x3 Steel Beam
30 lbs	15'-10"	23'

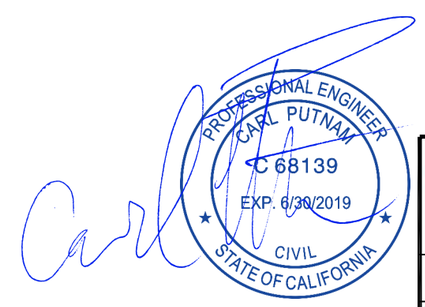

May 27 2017
Engineer's Stamp

Amerimax
EXTERIOR HOME PRODUCTS

28921 US Hwy 74
Romoland, CA 92585

DRAWN BY: CP	TYPE:	
SCALE: NTS	NAME: Miscellaneous Details	
DATE:	FILE#: Misc2–2015	SHEET:

7.0 POST AND FASTENER REQUIREMENTS FOR COMMERCIAL AND PATIO STRUCTURES

Trib Width (ft)	Allowable Width for Attached Two Post Structures on Slab — Live or Ground Snow Load 10 psf	20 psf
3	45'-5"	23'-9"
3.5	38'-11"	20'-4"
4	34'-1"	17'-10"
4.5	30'-3"	15'-10"
5	27'-3"	14'-3"
5.5	24'-9"	12'-11"
6	22'-8"	11'-10"
6.5	20'-11"	10'-11"
7	19'-5"	10'-2"
7.5	18'-2"	n/a
8	17'-0"	n/a
8.5	16'-0"	n/a
9	15'-1"	n/a

Table 7.1

POST TYPE	POST DESCRIPTIONS	DETAIL	MAX POST HGHT
A1	Twin 0.060"x1.5"x1.5" Scroll	AC	11'
A2	0.042"x3"x8" Aluminum Post	N30 or L1	12'
B	0.024"x3"x3"Post with Sideplates	N16, BK or L24	10'
C	Clover 0.030"x3"x3" Alum	N11, AH or L11	11'
D	Clover 0.040"x3"x3" Alum	N11, AH or L11	11'
E	Colonial 0.062" Extruded	AE	11'
F1	0.041"x3"x3" Steel Clover	N11, AH or L11	11'
F2	0.041"x3"x3" Steel Clover	N11, AH or L11	10'
F3	0.041"x3"x3" Steel Clover	N11, AH or L11	9'
F4	0.041"x3"x3" Steel Clover	N11, AH or L11	8'
F5	0.041"x3"x3" Steel Clover	N11, AH or L11	7'
G1	1/8"x3"x3" Steel Square	N17, AG or L21	12'
G2	1/8"x3"x3" Steel Square	N17, AG or L21	10'
H1	3/16"x3"x3" Steel Square	N17, AG or L21	12'
H2	3/16"x3"x3" Steel Square	N17, AG or L21	10'
I1	3/16"x4"x4" Steel Square	N17, AG or L21	15'
I2	3/16"x4"x4" Steel Square	N17, AG or L21	12'
J1	3/16"x5"x5" Steel Square	N17, AG or L21	15'
J2	3/16"x5"x5" Steel Square	N17, AG or L21	12'
K1	3/16"x6"x6" Steel Square	N17, AG or L21	15'

Table 7.2

Table7.3: Required Number of Fasteners for Shearing Loads

	Footer Size d (in)	Design Uplift (lbs)	Aluminum Material Gage (in) 0.024 A #14 SMS 128	0.024 B 3/8" B BOLT 590	0.032 C 3/8" B BOLT 788	0.036 D #14 SMS 192	0.040 E #14 SMS 210	0.040 F 3/8" B BOLT 984	0.060 G #14 SMS 310	0.060 H 3/8" B BOLT 1476	Steel Gage (in) 0.041 I #14 SMS 507	0.041 J 3/8" B BOLT 1522
	12	90	1	1	1	1	1	1	1	1	1	1
	13	114	1	1	1	1	1	1	1	1	1	1
	14	143	2	1	1	1	1	1	1	1	1	1
	15	176	2	1	1	1	1	1	1	1	1	1
	16	213	2	1	1	2	2	1	1	1	1	1
	17	256	2	1	1	2	2	1	1	1	1	1
	18	304	3	1	1	2	2	1	1	1	1	1
	19	357	3	1	1	2	2	1	2	1	1	1
20 psf Slab 115C	20	417	4	1	1	3	2	1	2	1	1	1
	21	482	4	1	1	3	3	1	2	1	1	1
	22	555	5	1	1	3	3	1	2	1	2	1
	23	634	5	2	1	4	4	1	3	1	2	1
	24	720	6	2	1	4	4	1	3	1	2	1
10 psf	**Slab 115B**	722	**6**	**2**	**1**	**4**	**4**	**1**	**3**	**1**	**2**	**1**
	25	814	7	2	2	5	4	1	3	1	2	1
10 psf	**Slab 115C**	886	7	2	2	5	5	1	3	1	2	1
	26	915	8	2	2	5	5	1	3	1	2	1
	27	1025	9	2	2	6	5	2	4	1	3	1
	28	1143	9	2	2	6	6	2	4	1	3	1
	29	1270	n/a	3	2	7	7	2	5	1	3	1
	30	1406	n/a	3	2	8	7	2	5	1	3	1
	31	1552	n/a	3	2	9	8	2	6	2	4	2
	32	1707	n/a	3	3	9	9	2	6	2	4	2
	33	1872	n/a	4	3	n/a	9	2	7	2	4	2
	34	2047	n/a	4	3	n/a	n/a	3	7	2	5	2
	35	2233	n/a	4	3	n/a	n/a	3	8	2	5	2
	36	2430	n/a	5	4	n/a	n/a	3	8	2	5	2
	37	2638	n/a	5	4	n/a	n/a	3	9	2	6	2
	38	2858	n/a	5	4	n/a	n/a	3	n/a	2	6	2
	39	3090	n/a	6	4	n/a	n/a	4	n/a	3	7	3
	40	3333	n/a	6	5	n/a	n/a	4	n/a	3	7	3
	41	3590	n/a	7	5	n/a	n/a	4	n/a	3	8	3
	42	3859	n/a	7	5	n/a	n/a	4	n/a	3	8	3
	43	4141	n/a	8	6	n/a	n/a	5	n/a	3	9	3
	44	4437	n/a	8	6	n/a	n/a	5	n/a	4	9	3
	45	4746	n/a	9	7	n/a	n/a	5	n/a	4	n/a	4
	46	5070	n/a	9	7	n/a	n/a	6	n/a	4	n/a	4
	47	5407	n/a	n/a	7	n/a	n/a	6	n/a	4	n/a	4
	48	5760	n/a	n/a	8	n/a	n/a	6	n/a	4	n/a	4
	49	6128	n/a	n/a	8	n/a	n/a	7	n/a	5	n/a	5
	50	6510	n/a	n/a	9	n/a	n/a	7	n/a	5	n/a	5

Table 7.4: Required Number of Fasteners for Tension Loads

Aluminum Gage (in) 0.036 K 3/8" B BOLT 665	0.06 L #14 SMS 128	0.060 M 3/8" B BOLT 865	0.090 N 3/8" B BOLT 1038	0.100 O #14 SMS 234	Design Uplift (lbs)	Footer Size d (in)
1	1	1	1	1	90	12
1	1	1	1	1	114	13
1	2	1	1	1	143	14
1	2	1	1	1	176	15
1	2	1	1	1	213	16
1	2	1	1	2	256	17
1	3	1	1	2	304	18
1	3	1	1	2	357	19
1	4	1	1	2	417	20
1	4	1	1	3	482	21
1	5	1	1	3	555	22
1	5	1	1	3	634	23
2	6	1	1	4	720	24
2	**6**	**1**	**1**	**4**	722	Slab
2	7	1	1	4	814	25
2	7	2	1	4	886	Slab
2	8	2	1	4	915	26
2	9	2	1	5	1025	27
2	9	2	2	5	1143	28
2	n/a	2	2	6	1270	29
3	n/a	2	2	7	1406	30
3	n/a	2	2	7	1552	31
3	n/a	2	2	8	1707	32
3	n/a	3	2	8	1872	33
4	n/a	3	2	9	2047	34
4	n/a	3	3	n/a	2233	35
4	n/a	3	3	n/a	2430	36
4	n/a	4	3	n/a	2638	37
5	n/a	4	3	n/a	2858	38
5	n/a	4	3	n/a	3090	39
6	n/a	4	4	n/a	3333	40
6	n/a	5	4	n/a	3590	41
6	n/a	5	4	n/a	3859	42
7	n/a	5	4	n/a	4141	43
7	n/a	6	5	n/a	4437	44
8	n/a	6	5	n/a	4746	45
8	n/a	6	5	n/a	5070	46
9	n/a	7	6	n/a	5407	47
9	n/a	7	6	n/a	5760	48
n/a	n/a	8	6	n/a	6128	49
n/a	n/a	8	7	n/a	6510	50

Fastener Terminology
#14 SMS = #14 sheet metal or SDS screw, 1/2" minimum length
3/8" B = 3/8" Diameter Bolt
See General Notes for specifics on fasteners

1 Clearspan on this chart is the distance from the wall to the first row of columns.
2 Hilti Kwik Bolt TZ 3/8" diameter and 2" embed and 1" dia steel washer: ICC ESR 1917 or other anchor w/ 320# allowable shear and 200# allowable tensile vs live, snow, wind and seismic loads.
3 Masonry anchors must have an allowable shear value of 320# and 200# tensile for live, snow, wind or seismic loads or be specified by a design professional.
4 #14 screws must have 1.5" of penetration into solid wood.
5 1/4" Lag screws must have 2 1/4" of penetration into studs and 0.5" washers These lag screws must be installed as per AFP&A NDS Section 11.1.3. See General Note #11 for washer specifications.
6 10 and 20 psf are live or snow loads, 25- 60 psf are snow loads.
7 For ANC3 and ANC4 wood framing imust be SG=0.5 or denser (Douglas Fir- Larch)
8 "n/a" indicates maximum panel span in this report or ICC ESR 2488 was reached by a lesser amount of fasteners.

TABLE 7.5: WALL ATTACHMENTS FOR SOLID COVER STRUCTURES

LIVE/ SNOW LOAD (PSF)	WIND SPEED (MPH) AND EXPOSURE		ALLOWABLE PANEL SPAN FOR GIVEN FASTENER AND NUMBER — CONCRETE (2) OR MASONRY (3) ANCHOR O/C SPACING 16"	8"	#14 SCREW (4) PER 16" 1/4" LAG SCREW (5) PER 16" 1	2	3	4
10	110	B	21'	n/a	18'	21'	n/a	n/a
10	115	B	20'	n/a	17.5'	20'	n/a	n/a
10	120	B	17'	n/a	17'	17'	n/a	n/a
10	115	C	18'	n/a	14.5'	18'	n/a	n/a
10	130	C	16'	n/a	12.5'	16'	n/a	n/a
10	140	C	15'	n/a	11.5'	14.5'	n/a	n/a
10	150	C	14'	n/a	10'	13.5'	n/a	n/a
10	160	C	13'	n/a	9'	12.5'	n/a	n/a
20	130	C	15'	15.5'	9.5'	15.5'	n/a	n/a
20	140	C	14'	14'	9'	14'	n/a	n/a
20	160	C	12'	13'	7.5'	13'	n/a	n/a
25	115	C	16'	n/a	10'	15.5'	n/a	n/a
25	130	C	14'	n/a	9.5'	14'	n/a	n/a
25	140	C	13'	n/a	8.5'	13.5'	n/a	n/a
30	115	C	15'	n/a	8.5'	14.5'	n/a	n/a
30	130	C	13'	14'	8.5'	14'	n/a	n/a
30	140	C	12'	13'	8'	13'	n/a	n/a
35.7	115	C	13'	14'	7'	14'	n/a	n/a
35.7	140	C	11'	13.5'	7'	13.5'	n/a	n/a
42	130	C	11'	13.5'	6'	12.5'	14'	n/a
42	140	C	10'	12'	6'	12'	n/a	n/a
50	130	C	9.5'	12.5'	5'	10.5'	13'	n/a
60	140	C	8'	11.5'	4'	8.5'	12'	n/a

1 Spacing between bolts and screws shall be 2.5 times the shank diamter.
2 The edge distance of bolts and screws shall be 3 times the shank diameter
3 Connections shall be arranged so that the center of resistance of the connection shall coincide with the resultant line of action of the load.

TABLE 7.6: WALL ATTACHMENTS FOR LATTICE COVERS

GRND SNOW LOAD (PSF)	Wind Speed and Exposure	# of Screws* per Rafter	ALUMINUM RAFTER SPACING — MAXIMUM ALUMINUM RAFTER SPAN 12"	16"	20"	24"	32"	36"
10	170 EXP B	2	26'	26'	20'	22'	18'	16'
LIVE	140 EXP C	3	26'	26'	20'	22'	19'	17'
20	180 EXP B	2	19'	18'	14'	12'	9'	8'
LIVE	180 EXP C	3	19'	19'	14'	13'	10'	9'
25	180 EXP C	2	18'	18'	13'	12'	9'	8'
30	180 EXP C	2	17'	15'	11'	10'	8'	7'
36	180 EXP C	2	16'	13'	10'	9'	7'	6'
42	180 EXP C	2	13'	11'	8'	8'	6'	5'
50	180 EXP C	2	11'	9'	7'	6'	5'	4'
60	180 EXP C	2	10'	8'	6'	5'	4'	3'
		3	10'	8'	6'	5'	4'	4'

*Screws are #14 screws w/ 1.5" embedment into G=0.5 solid wood (Douglas Fir)

TABLE 7.7 STUCCO ATTACHMENT TO WALL ALLOWABLE DISTANCE TO FIRST ROW OF POSTS

Ground Snow Load (psf)		1/4" Lag Screws 16" o/c 1	2	3	4	Wind Speed (mph)	Exp
Live	10	7'-6''	15'-0''	22'-7''	30'-1''	110	B
Live	10	7'-1''	14'-3''	21'-4''	28'-6''	115	B
Live	10	6'-7''	13'-3''	19'-11''	26'-7''	110	C
Live	10	6'-3''	12'-6''	18'-10''	25'-1''	115	C
Live	10	5'-3''	10'-7''	15'-10''	21'-2''	130	C
Live	10	4'-8''	9'-5''	14'-2''	18'-11''	140	C
Live	20	5'-2''	10'-4''	15'-6''	20'-8''	110	C
Live	20	4'-11''	9'-10''	14'-10''	19'-9''	115	C
Live	20	4'-3''	8'-7''	12'-11''	17'-3''	130	C
	25	4'-10''	9'-8''	14'-6''	19'-4''	115	C
	25	4'-2''	8'-5''	12'-8''	16'-11''	130	C
	25	3'-10''	7'-9''	11'-7''	15'-6''	140	C
	30	4'-5''	8'-10''	13'-4''	17'-9''	115	C
	30	3'-11''	7'-10''	11'-9''	15'-8''	130	C
	30	3'-7''	7'-2''	10'-10''	14'-5''	140	C
	35.7	4'-0''	8'-0''	12'-1''	16'-1''	115	C
	35.7	3'-4''	6'-8''	10'-1''	13'-5''	140	C
	42	3'-4''	6'-8''	10'-1''	13'-5''	130	C
	42	3'-1''	6'-3''	9'-4''	12'-6''	140	C
	50	2'-10''	5'-9''	8'-8''	11'-7''	130	C
	60	2'-5''	4'-10''	7'-3''	9'-8''	140	C

Lag = 1/4" Lag Screw with 2.5" penetration into G=0.5 wood (Douglas Fir)
Lattice Structures always use 115 mph Exposure B for the wind condition

Amerimax Exterior Home Products
28921 US Hwy 74
Romoland, CA 92585

Carl Putnam, P. E.
3441 Ivylink Place
Lynchburg, VA 24503
(434) 384-2514
carlputnam@comcast.net

PROFESSIONAL ENGINEER CARL PUTNAM C 68139 EXP. 6/30/2019 CIVIL STATE OF CALIFORNIA

7.0 CONCRETE FOOTING OPTIONS

EQUIVALENT FOOTINGS FOR FREESTAND AND ATTACHED

CONSTRAINED FOOTING (IN)	NON CONSTRAINED FOOTING (IN)	DIAMETER OF CIRCULAR FOOTINGS (IN) 12"	18"	24"	36"
		DEPTH OF CIRCULAR FOOTINGS (IN)			
14"	17"	24"	14"	14"	14"
15"	18"	30"	15"	15"	15"
16"	19"	36"	16"	16"	16"
17"	21"	43"	19"	17"	17"
18"	22"	52"	23"	18"	18"
19"	23"	61"	27"	19"	19"
20"	24"	n/a	31"	20"	20"
21"	26"	n/a	36"	21"	21"
22"	27"	n/a	42"	24"	22"
23"	28"	n/a	48"	27"	23"
24"	30"	n/a	54"	31"	24"
25"	31"	n/a	61"	35"	25"
26"	32"	n/a	69"	39"	26"
27"	34"	n/a	77"	44"	27"
28"	35"	n/a	86"	49"	28"
29"	36"	n/a	n/a	54"	29"
30"	38"	n/a	n/a	60"	30"
31"	39"	n/a	n/a	66"	31"
32"	40"	n/a	n/a	72"	32"
33"	42"	n/a	n/a	79"	35"
34"	43"	n/a	n/a	87"	39"
35"	44"	n/a	n/a	95"	42"
36"	46"	n/a	n/a	103"	46"
37"	47"	n/a	n/a	112"	50"
38"	48"	n/a	n/a	n/a	54"
39"	50"	n/a	n/a	n/a	58"
40"	51"	n/a	n/a	n/a	63"
41"	53"	n/a	n/a	n/a	68"
42"	54"	n/a	n/a	n/a	73"
43"	55"	n/a	n/a	n/a	78"
44"	57"	n/a	n/a	n/a	84"

TABLE 7.8

CONVERSION TO SQUARE TOP FOOTING

	For Single Span Attached Footings Only			
	Footing Depth			
d (in)	18"	24"	30"	36"
	Required Side of Square Footing			
20"	21"	18"	16"	15"
21"	23"	20"	18"	16"
22"	24"	21"	19"	17"
23"	26"	23"	20"	18"
24"	28"	24"	21"	20"
25"	29"	26"	23"	21"
26"	31"	27"	24"	22"
27"	33"	29"	26"	23"
28"	35"	30"	27"	25"
29"	37"	32"	29"	26"
30"	39"	34"	30"	27"
31"	41"	35"	32"	29"
32"	43"	37"	33"	30"
33"	45"	39"	35"	32"
34"	47"	40"	36"	33"
35"	49"	42"	38"	35"
36"	51"	44"	39"	36"
37"	53"	46"	41"	38"
38"	55"	48"	43"	39"
39"	57"	50"	44"	41"
40"	60"	52"	46"	42"
41"	N/A	54"	48"	44"
42"	N/A	56"	50"	45"
43"	N/A	58"	51"	47"
44"	N/A	60"	53"	49"
45"	N/A	N/A	55"	50"
46"	N/A	N/A	57"	52"
47"	N/A	N/A	59"	54"
48"	N/A	N/A	N/A	55"
49"	N/A	N/A	N/A	57"
50"	N/A	N/A	N/A	59"

TABLE 7.9

SITE SPECIFIC FOOTING TABLE for SINGLE SPAN Attached Structures

	Wind Condition								
Trib Area (sq ft)	110 MPH Exp B	110 MPH Exp C or 130 MPH Exp B	115 MPH Exp B	115 MPH Exp C	130 MPH Exp C or 150 MPH Exp B	140 MPH Exp C or 160 MPH Exp B	150 MPH Exp C or 170 MPH Exp B	160 MPH Exp C or 180 MPH Exp B	Lattice Trib Area (sq ft)
	Required "d" of Footing (in)								
15	15"	16"	15"	17"	18"	19"	20"	21"	25
20	16"	18"	17"	19"	20"	21"	22"	23"	33
25	17"	19"	18"	20"	22"	23"	24"	25"	42
30	18"	21"	19"	21"	23"	24"	26"	27"	50
35	19"	22"	20"	22"	24"	26"	27"	28"	58
40	20"	23"	21"	23"	25"	27"	28"	29"	67
45	21"	24"	22"	24"	26"	28"	29"	31"	75
50	22"	24"	22"	25"	27"	29"	30"	32"	83
55	22"	25"	23"	26"	28"	30"	31"	33"	92
60	23"	26"	24"	27"	29"	31"	32"	34"	100
65	24"	27"	24"	28"	30"	31"	33"	34"	108
70	24"	27"	25"	28"	31"	32"	34"	35"	117
80	25"	29"	26"	29"	32"	34"	35"	37"	133
90	26"	30"	27"	31"	33"	35"	37"	38"	150
100	27"	31"	28"	32"	35"	36"	38"	40"	167
110	28"	32"	29"	33"	36"	38"	39"	41"	183
120	29"	33"	30"	34"	37"	39"	40"	42"	200
130	30"	34"	31"	35"	38"	40"	42"	43"	217
140	31"	34"	32"	36"	39"	41"	43"	45"	233
150	31"	35"	32"	36"	40"	42"	44"	46"	250
160	32"	36"	33"	37"	40"	43"	45"	47"	267
170	33"	37"	34"	38"	41"	43"	45"	48"	283
180	33"	37"	34"	39"	42"	44"	46"	48"	300
190	34"	38"	35"	39"	43"	45"	47"	49"	317
200	35"	39"	36"	40"	44"	46"	48"	50"	333
210	35"	39"	36"	41"	44"	47"	49"	51"	350
220	36"	40"	37"	41"	45"	47"	50"	52"	367
230	36"	41"	37"	42"	46"	48"	50"	53"	383
240	37"	41"	38"	43"	46"	49"	51"	53"	400

TABLE 7.10

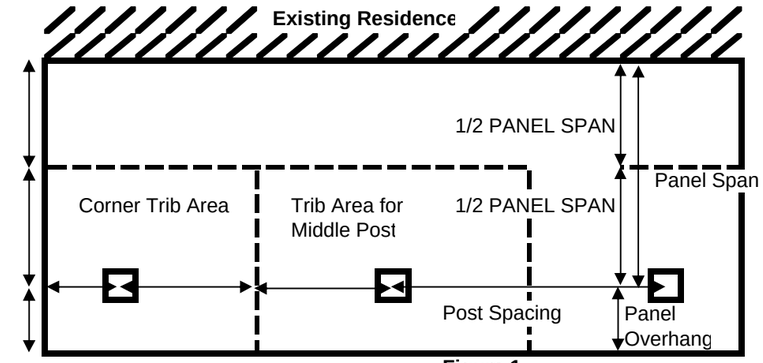

Figure 1

Determine Trib Area from Figure 1

INSTRUCTIONS TO USE TABLE 7.10

1. **TABLE IS FOR SINGLE SPAN ATTACHED UNITS ONLY**
2. **DETERMINE ACTUAL TRIBUTARY AREA**
   - **FOR MIDDLE POSTS THIS IS:**
     - **TRIB WIDTH x POST SPACING**
   - **FOR END POSTS THIS IS:**
     - **(OVERHANG+ HALF OF POST SPACING) x TRIB WIDTH**
3. **DETERMINE FOOTING SIZE FOR WIND CONDITION**
4. **FOR LATTICE USE LAST COLUMN FOR TRIB AREA**

Amerimax Exterior Home Products
28921 US Hwy 74
Romoland, CA 92585

Carl Putnam, P. E.
3441 Ivylink Place
Lynchburg, VA 24503

PROFESSIONAL ENGINEER
CARL PUTNAM
C 68139
EXP. 6/30/2019
CIVIL
STATE OF CALIFORNIA

Misc4-2015

7.0 Requirements for Surface Mounted Posts on Concrete Slabs or Footings for Sigle Span Attached Lattice Structure

REQUIRED NUMBER OF POSTS FOR SINGLE SPAN LATTICE UNITS WITH SURFACE MOUNTED POSTS ON CONCRETE SLABS OR FOOTINGS

Table L1a: Use this table for the following headers
Moment Frame A = 367 lbf*ft

Wind Speed	Required Number of Posts	Post Height (ft) 8'	9'	10'	11'	12'	8'	9'	10'	11'	12'
		Wind Exposure B					Wind Exposure C				
		MAXIMUM TRIBUTARY WIDTH ALLOWED									
110 mph	2 or 3	7'	5.5'	4'	3'	2'	4'	2.5'	1.5'	1'	0'
	4	12'	10'	8'	6.5'	5.5'	7'	5.5'	4.5'	3'	2'
	5	15'	14'	12'	10'	8.5'	10.5'	8.5'	7'	5.5'	4.5'
	6	15'	15'	15'	13.5'	11.5'	13.5'	11.5'	9.5'	8'	6.5'
	7	15'	15'	15'	15'	15'	15'	14'	12'	10'	8.5'
115 mph	2 or 3	6'	5'	3.5'	2.5'	1.5'	3.5'	2'	1.5'	0.5'	0'
	4	10.5'	8.5'	7'	5.5'	4.5'	6.5'	5'	3.5'	2.5'	1.5'
	5	15'	12.5'	10.5'	9'	7.5'	9'	7.5'	6'	4.5'	3.5'
	6	15'	15'	14'	12'	10.5'	12'	10'	8.5'	7'	5.5'
	7	15'	15'	15'	15'	13'	15'	12.5'	10.5'	9'	7.5'
130 mph	2 or 3	4.5'	3'	2'	1'	0.5'	2'	1'	0.5'	0'	0'
	4	7.5'	6'	5'	3.5'	2.5'	4.5'	3'	2'	1'	0.5'
	5	11'	9'	7.5'	6'	5'	6.5'	5'	4'	3'	2'
	6	14.5'	12'	10.5'	8.5'	7'	9'	7'	6'	4.5'	3.5'
	7	15'	15'	13'	11'	9.5'	11.5'	9.5'	7.5'	6'	5'
140 mph	2 or 3	3.5'	2.5'	1.5'	0.5'	0'	1.5'	0.5'	0'	0'	0'
	4	6.5'	5'	3.5'	2.5'	1.5'	3.5'	2.5'	1.5'	0.5'	0'
	5	9.5'	7.5'	6'	4.5'	3.5'	5.5'	4'	3'	2'	1'
	6	12.5'	10'	8.5'	7'	5.5'	7.5'	6'	4.5'	3.5'	2.5'
	7	15'	13'	10.5'	9'	7.5'	9.5'	7.5'	6'	5'	3.5'
150 mph	2 or 3	2.5'	1.5'	0.5'	0'	0'	1'	0'	0'	0'	0'
	4	5'	4'	3'	2'	1'	2.5'	1.5'	0.5'	0'	0'
	5	8'	6'	5'	3.5'	2.5'	4.5'	3'	2'	1'	0.5'
	6	10.5'	8.5'	7'	5.5'	4.5'	6'	4.5'	3.5'	2.5'	1.5'
	7	13'	10.5'	9'	7.5'	6'	8'	6'	5'	3.5'	2.5'
170 mph	2 or 3	1.5'	0.5'	0'	0'	0'	0'	0'	0'	0'	0'
	4	3.5'	2.5'	1.5'	0.5'	0'	1.5'	0.5'	0'	0'	0'
	5	5.5'	4'	3'	2'	1'	3'	2'	1'	0'	0'
	6	7.5'	6'	4.5'	3.5'	2.5'	4'	3'	2'	1'	0'
	7	9.5'	7.5'	6'	5'	4'	5.5'	4'	3'	2'	1'

Table L1b: Use this table for the following headers
Moment Frame B = 489 lbf*ft

Wind Speed	Required Number of Posts	Post Height (ft) 8'	9'	10'	11'	12'	8'	9'	10'	11'	12'
		Wind Exposure B					Wind Exposure C				
		MAXIMUM TRIBUTARY WIDTH ALLOWED									
110 mph	2 or 3	10'	8.5'	7'	5.5'	4'	6'	4.5'	3.5'	2.5'	1.5'
	4	15'	14'	12'	10'	8.5'	10.5'	8.5'	7'	5.5'	4.5'
	5	15'	15'	15'	14.5'	12.5'	14.5'	12'	10'	8.5'	7'
	6	15'	15'	15'	15'	15'	15'	15'	13.5'	11.5'	10'
	7	15'	15'	15'	15'	15'	15'	15'	15'	14.5'	13'
115 mph	2 or 3	9'	7.5'	6'	4.5'	3.5'	5.5'	4'	3'	2'	1'
	4	15'	12.5'	10.5'	9'	7.5'	9'	7.5'	6'	4.5'	3.5'
	5	15'	15'	15'	13'	11'	13'	11'	9'	7.5'	6'
	6	15'	15'	15'	15'	15'	15'	14.5'	12'	10.5'	8.5'
	7	15'	15'	15'	15'	15'	15'	15'	15'	13'	11.5'
130 mph	2 or 3	6.5'	5'	4'	3'	2'	3.5'	2.5'	1.5'	0.5'	0'
	4	11'	9'	7.5'	6'	5'	6.5'	5'	4'	3'	2'
	5	15'	13'	11'	9.5'	8'	9.5'	8'	6.5'	5'	4'
	6	15'	15'	15'	12.5'	11'	13'	10.5'	9'	7.5'	6'
	7	15'	15'	15'	15'	14'	15'	13.5'	11.5'	9.5'	8'
140 mph	2 or 3	5.5'	4'	3'	2'	1'	2.5'	1.5'	1'	0'	0'
	4	9.5'	7.5'	6'	4.5'	3.5'	5.5'	4'	3'	2'	1'
	5	13'	11'	9'	7.5'	6'	8'	6.5'	5'	4'	3'
	6	15'	14.5'	12.5'	10.5'	9'	10.5'	8.5'	7'	5.5'	4.5'
	7	15'	15'	15'	13.5'	11.5'	13.5'	11'	9'	7.5'	6.5'
150 mph	2 or 3	4.5'	3'	2'	1'	0.5'	2'	1'	0.5'	0'	0'
	4	7.5'	6'	5'	3.5'	2.5'	4.5'	3'	2'	1'	0.5'
	5	11'	9'	7.5'	6'	5'	6.5'	5'	4'	3'	2'
	6	14.5'	12.5'	10.5'	8.5'	7'	9'	7'	6'	4.5'	3.5'
	7	15'	15'	13'	11'	9.5'	11.5'	9.5'	7.5'	6'	5'
170 mph	2 or 3	3'	2'	1'	0'	0'	1'	0'	0'	0'	0'
	4	5.5'	4'	3'	2'	1'	3'	2'	1'	0'	0'
	5	8'	6.5'	5'	4'	3'	4.5'	3.5'	2.5'	1.5'	0.5'
	6	11'	9'	7.5'	6'	4.5'	6.5'	5'	3.5'	2.5'	1.5'
	7	13.5'	11.5'	9.5'	8'	6.5'	8'	6.5'	5'	4'	3'

Seismic Size Requirements

Table L2a
Moment Frame A

Ss	Size Allowed (cubic feet)	
20%	1575	
30%	1050	***
40%	788	
50%	720	**
60%	600	*
70%	514	
80%	525	
90%	467	
100%	420	
110%	417	
120%	382	
130%	388	
140%	360	
150%	336	

Table L2b
Moment Frame B

Ss	Size Allowed (cubic feet)	
20%	2099	
30%	1399	
40%	1050	
50%	960	***
60%	800	
70%	685	
80%	700	**
90%	622	
100%	560	
110%	555	*
120%	509	
130%	517	
140%	480	
150%	448	

Directions for using Seismic Table L2a, L2b, L2c or L2d***

1. Determine Tributary width
2. Determine width of structure
3. Determine height of structure
4. Determine number of posts structure has
5. Determine Ss for your area (contac
   your local building department)****
6. Choose Table L2a-d based on the header
7. Determine the maximum size allowed on the chart
8. Multiply #1, #2 and #3 and divide by #4*****
9. If #8 is lower than #7 the structure is OK for seismic
10. If your Ss is over 150% use 150%

*no check needed for Patio Covers attached to slab under these conditions
**no check needed for Patio Covers that are 10' tall attached to slab under these conditions
***no check needed for Patio Covers that are 8' tall attached to slab under these conditions
****Ss is the Maximum Considered Earthquake Ground Motion (0.2 sec)
mapped on Figure 1613.3.1(1) in the 2012 IBC
***** Alternatively, divide by these numbers
For 2 post Structures divide by 3
For 3 post Structures divide by 3
For 4 post Structures divide by 4.5
For 5 post Structures divide by 6
For all others add 1.5 to number of posts
****** Not for use in areas with flat roof snow loads exceeds 30 psf.

Moment Frame A: Detail L26, 4 screws, A=5", B= 7", sideplates = 0.024"
Moment Frame A: Detail L12, 4 screws, A=2", B= 5", DBL HEADER
Moment Frame B: Detail L26, 4 screws, A=5", B= 7", sideplates = 0.032"
Moment Frame B: Detail L26, 6 screws, A=5", B= 7", sideplates = 0.024"
Moment Frame C: Detail L26, 8 screws, A=5", B= 7", sideplates = 0.024"
Moment Frame C: Detail L12, 4 screws, A=2", B= 7", DBL HEADER
Moment Frame C: Detail L12, 6 screws, A=2", B= 5", DBL HEADER
Moment Frame C: Detail L8, 4 BOLTS, A=2", B= 7", SINGLE STEEL C
Moment Frame D: Detail L8, 4 BOLTS, A=2", B= 5", DBL STEEL C

Tables L1 and L2 need to be checked for surfac
mount concrete attachmen

Amerimax Exterior Home Products
28921 US Hwy 74
Romoland, CA 92585

Carl Putnam, P. E.
3441 Ivylink Place
Lynchburg, VA 24503

PROFESSIONAL ENGINEER
CARL PUTNAM
C 68139
EXP. 6/30/2019
CIVIL
STATE OF CALIFORNIA

Misc5a-2015

7.0 Requirements for Surface Mounted Posts on Concrete Slabs or Footings for Sigle Span Attached Lattice Structure

REQUIRED NUMBER OF POSTS FOR SINGLE SPAN LATTICE UNITS WITH SURFACE MOUNTED POSTS ON CONCRETE SLABS OR FOOTINGS

Table L1c: Use this table for the following headers
Moment Frame C = 536 lbf*ft

Wind Speed	Required Number of Posts	Post Height (ft) 8'	9'	10'	11'	12'	8'	9'	10'	11'	12'
		Wind Exposure B					Wind Exposure C				
		MAXIMUM TRIBUTARY WIDTH ALLOWED									
110 mph	2 or 3	11.5'	9.5'	8'	6.5'	5'	7'	5.5'	4'	3'	2'
	4	15'	15'	13.5'	11.5'	9.5'	11.5'	9.5'	8'	6.5'	5'
	5	15'	15'	15'	15'	14.5'	15'	13.5'	11.5'	10'	8'
	6	15'	15'	15'	15'	15'	15'	15'	15'	13'	11.5'
	7	15'	15'	15'	15'	15'	15'	15'	15'	15'	14.5'
115 mph	2 or 3	10.5'	8.5'	7'	5.5'	4.5'	6'	4.5'	3.5'	2.5'	1.5'
	4	15'	14'	12'	10'	8.5'	10.5'	8.5'	7'	5.5'	4.5'
	5	15'	15'	15'	14.5'	12.5'	14.5'	12.5'	10.5'	8.5'	7'
	6	15'	15'	15'	15'	15'	15'	15'	13.5'	11.5'	10'
	7	15'	15'	15'	15'	15'	15'	15'	15'	15'	13'
130 mph	2 or 3	7.5'	6'	4.5'	3.5'	2.5'	4'	3'	2'	1'	0'
	4	12.5'	10.5'	8.5'	7'	5.5'	7.5'	6'	4.5'	3.5'	2.5'
	5	15'	15'	12.5'	10.5'	9'	11'	9'	7.5'	6'	4.5'
	6	15'	15'	15'	14.5'	12.5'	14.5'	12'	10'	8.5'	7'
	7	15'	15'	15'	15'	15'	15'	15'	12.5'	11'	9'
140 mph	2 or 3	6'	4.5'	3.5'	2.5'	1.5'	3'	2'	1'	0.5'	0'
	4	10.5'	8.5'	7'	5.5'	4.5'	6'	4.5'	3.5'	2.5'	1.5'
	5	15'	12.5'	10.5'	8.5'	7'	9'	7.5'	6'	4.5'	3.5'
	6	15'	15'	14'	12'	10'	12'	10'	8'	6.5'	5.5'
	7	15'	15'	15'	15'	13'	15'	12.5'	10.5'	9'	7.5'
150 mph	2 or 3	5'	3.5'	2.5'	1.5'	1'	2.5'	1.5'	0.5'	0'	0'
	4	8.5'	7'	5.5'	4.5'	3.5'	5'	3.5'	2.5'	1.5'	1'
	5	12.5'	10.5'	8.5'	7'	5.5'	7.5'	6'	4.5'	3.5'	2.5'
	6	15'	13.5'	11.5'	10'	8'	10'	8'	6.5'	5.5'	4'
	7	15'	15'	14.5'	12.5'	10.5'	12.5'	10.5'	8.5'	7'	6'
170 mph	2 or 3	3.5'	2'	1.5'	0.5'	0'	1.5'	0.5'	0'	0'	0'
	4	6'	5'	3.5'	2.5'	1.5'	3.5'	2'	1.5'	0.5'	0'
	5	9'	7.5'	6'	4.5'	3.5'	5.5'	4'	3'	2'	1'
	6	12'	10'	8.5'	7'	5.5'	7.5'	5.5'	4.5'	3.5'	2.5'
	7	15'	12.5'	10.5'	9'	7.5'	9'	7.5'	6'	4.5'	3.5'

Table L1d: Use this table for the following headers
Moment Frame D = 793 lbf*ft

Wind Speed	Required Number of Posts	Post Height (ft) 8'	9'	10'	11'	12'	8'	9'	10'	11'	12'
		Wind Exposure B					Wind Exposure C				
		MAXIMUM TRIBUTARY WIDTH ALLOWED									
110 mph	2 or 3	15'	15'	13'	11'	9.5'	11.5'	9.5'	7.5'	6'	5'
	4	15'	15'	15'	15'	15'	15'	15'	13'	11'	9.5'
	5	15'	15'	15'	15'	15'	15'	15'	15'	15'	14'
	6	15'	15'	15'	15'	15'	15'	15'	15'	15'	15'
	7	15'	15'	15'	15'	15'	15'	15'	15'	15'	15'
115 mph	2 or 3	15'	14'	11.5'	10'	8.5'	10'	8.5'	6.5'	5.5'	4'
	4	15'	15'	15'	15'	14.5'	15'	14'	12'	10'	8.5'
	5	15'	15'	15'	15'	15'	15'	15'	15'	14.5'	12.5'
	6	15'	15'	15'	15'	15'	15'	15'	15'	15'	15'
	7	15'	15'	15'	15'	15'	15'	15'	15'	15'	15'
130 mph	2 or 3	12.5'	10'	8.5'	7'	5.5'	7.5'	6'	4.5'	3.5'	2.5'
	4	15'	15'	14.5'	12.5'	10.5'	12.5'	10.5'	8.5'	7'	5.5'
	5	15'	15'	15'	15'	15'	15'	14.5'	12.5'	10.5'	9'
	6	15'	15'	15'	15'	15'	15'	15'	15'	14'	12'
	7	15'	15'	15'	15'	15'	15'	15'	15'	15'	15'
140 mph	2 or 3	10'	8.5'	7'	5.5'	4'	6'	4.5'	3.5'	2.5'	1.5'
	4	15'	14'	12'	10'	8.5'	10.5'	8.5'	7'	5.5'	4.5'
	5	15'	15'	15'	14.5'	12.5'	14.5'	12'	10.5'	8.5'	7'
	6	15'	15'	15'	15'	15'	15'	15'	13.5'	11.5'	10'
	7	15'	15'	15'	15'	15'	15'	15'	15'	15'	13'
150 mph	2 or 3	8.5'	7'	5.5'	4'	3'	5'	3.5'	2.5'	1.5'	0.5'
	4	14'	12'	10'	8.5'	7'	8.5'	7'	5.5'	4.5'	3'
	5	15'	15'	14.5'	12.5'	10.5'	12.5'	10.5'	8.5'	7'	5.5'
	6	15'	15'	15'	15'	14'	15'	13.5'	11.5'	9.5'	8'
	7	15'	15'	15'	15'	15'	15'	15'	14.5'	12.5'	10.5'
170 mph	2 or 3	6'	4.5'	3.5'	2.5'	1.5'	3'	2'	1'	0.5'	0'
	4	10.5'	8.5'	7'	5.5'	4.5'	6'	5'	3.5'	2.5'	1.5'
	5	15'	12.5'	10.5'	8.5'	7.5'	9'	7.5'	6'	4.5'	3.5'
	6	15'	15'	14'	12'	10'	12'	10'	8'	6.5'	5.5'
	7	15'	15'	15'	15'	13'	15'	12.5'	10.5'	9'	7.5'

Seismic Size Requirements

Table L2c
Moment Frame C

Ss	Size Allowed (cubic feet)	
20%	2301	
30%	1534	
40%	1150	
50%	1052	
60%	877	***
70%	751	
80%	767	**
90%	682	
100%	614	
110%	608	
120%	558	
130%	566	*
140%	526	
150%	491	

Table L2d
Moment Frame D

Ss	Size Allowed (cubic feet)	
20%	3404	
30%	2269	
40%	1702	
50%	1556	
60%	1297	
70%	1112	
80%	1135	
90%	1009	
100%	908	
110%	900	
120%	825	
130%	838	***
140%	778	
150%	726	**

Directions for using Seismic Table L2a, L2b, L2c or L2d***

1. Determine Tributary width
2. Determine width of structure
3. Determine height of structure
4. Determine number of posts structure has
5. Determine Ss for your area (contac
   your local building department)****
6. Choose Table L2a-d based on the header
7. Determine the maximum size allowed on the chart
8. Multiply #1, #2 and #3 and divide by #4*****
9. If #8 is lower than #7 the structure is OK for seismic
10. If your Ss is over 150% use 150%

*no check needed for Patio Covers attached to slab under these conditions
**no check needed for Patio Covers that are 10' tall attached to slab under these conditions
***no check needed for Patio Covers that are 8' tall attached to slab under these conditions
****Ss is the Maximum Considered Earthquake Ground Motion (0.2 sec)
mapped on Figure 1613.3.1(1) in the 2012 IBC
***** Alternatively, divide by these numbers
For 2 post Structures divide by 3
For 3 post Structures divide by 3
For 4 post Structures divide by 4.5
For 5 post Structures divide by 6
For all others add 1.5 to number of posts
****** Not for use in areas with flat roof snow loads exceeds 30 psf.

Moment Frame A: Detail L26, 4 screws, A=5", B= 7", sideplates = 0.024"
Moment Frame A: Detail L12, 4 screws, A=2", B= 5", DBL HEADER
Moment Frame B: Detail L26, 4 screws, A=5", B= 7", sideplates = 0.032"
Moment Frame B: Detail L26, 6 screws, A=5", B= 7", sideplates = 0.024"
Moment Frame C: Detail L26, 8 screws, A=5", B= 7", sideplates = 0.024"
Moment Frame C: Detail L12, 4 screws, A=2", B= 7", DBL HEADER
Moment Frame C: Detail L12, 6 screws, A=2", B= 5", DBL HEADER
Moment Frame C: Detail L8, 4 BOLTS, A=2", B= 7", SINGLE STEEL C
Moment Frame D: Detail L8, 4 BOLTS, A=2", B= 5", DBL STEEL C

Tables L1 and L2 need to be checked for surfac
mount concrete attachmen

Amerimax Exterior Home Products
28921 US Hwy 74
Romoland, CA 92585

Carl Putnam, P. E.
3441 Ivylink Place
Lynchburg, VA 24503

PROFESSIONAL ENGINEER
CARL J. PUTNAM
C 68139
EXP. 6/30/2019
CIVIL
STATE OF CALIFORNIA

Misc5b-2015

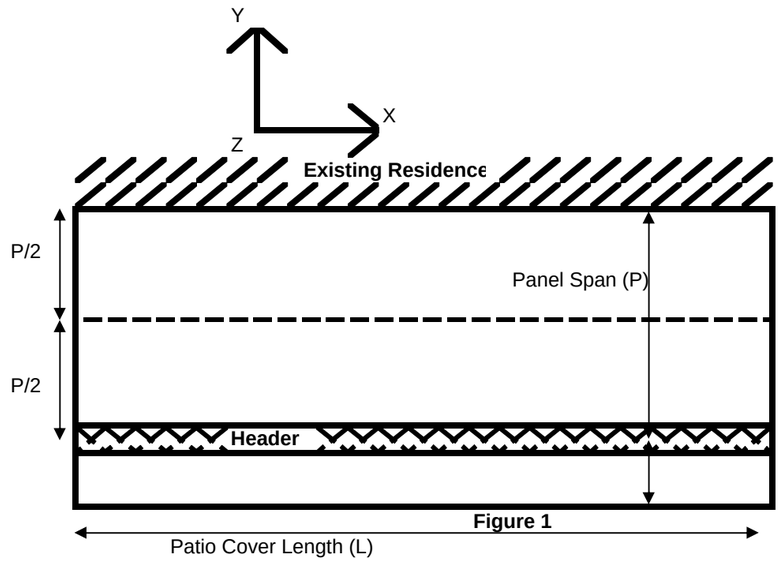

Figure 1

Determine Snow Loads on Existing Structure

1 **Determine Roof Snow/Live Load, S. See General Note 3**
2 **Dead Load = 1 psf**
3 **Add Dead and Live/Snow Loads, mulitply by half of Panel Spa**
Wall Load = (D + S) P /2
4 **Result is wall load in pounds per linear foot**

Determine Wind Loads on Existing Structure

1 **Determine Wind Load, W+ or W-. See Table 1**
2 **Dead Load included in Down and Up loads**
3 **Mulitply W+ or W- by half of Panel Spar**
Wall Load = W P /2
4 **Result is wall load in pounds per linear foot.**
5 **Maximum Shear Load in X direction is 447 lbf (180 mph Exposure C, 15'-3" Panel Spar**
Max load in Y direction (towards house) is 73 plf (110 mph Exp C, 10" I beam
Max load in Y direction due to force couple resisting lateral is 59 plf
(180 mph Exp C, Projection = Width)

Determine Seismic Loads on Existing Structure (Excludes Roof Snow Load over 30 ps
1 **Vertical Loads and Horizontal Loads = maximum of 1 ps**

Combination Loads based on Equation 16-1
1 **Determine Combination Load, C. See Table 2**
3 **Mulitply C by half of Panel Spar**
Wall Load = C P /2
4 **Result is wall load in pounds per linear foot**

Kz	0.7	0.98	height factor, Exposure B and C
Kzt	1	Topographic factor	
Kd	0.85	Wind Directionality factor	
I	1	Importance Factor	
G	0.85	Gust Factor	
Cnet	1.2	Net Pressure Coefficent	
Dead	1	psf	

Wind Speed (mph)	Exposure	qh (psf)	C&C (psf)	Design Down Load (psf) W+	Design Up Load (psf) W-
110	**B**	18.4	11.3	12.3	10.7
115	**B**	20.1	12.3	13.3	11.7
120	**B**	21.9	13.4	14.4	12.8
130	**B**	25.7	15.8	16.8	15.2
140	**B**	29.9	18.3	19.3	17.7
150	**B**	34.3	21.0	22.0	20.4
160	**B**	39.0	23.9	24.9	23.3
170	**B**	44.0	26.9	27.9	26.3
180	**B**	49.4	30.2	31.2	29.6
110	**B**	18.4	11.3	12.3	10.7
115	**C**	28.2	17.3	18.3	16.7
120	**C**	30.7	18.8	19.8	18.2
130	**C**	36.0	22.1	23.1	21.5
140	**C**	41.8	25.6	26.6	25.0
150	**C**	48.0	29.4	30.4	28.8
160	**C**	54.6	33.4	34.4	32.8
170	**C**	61.6	37.7	38.7	37.1
180	**C**	69.1	42.3	43.3	41.7

TABLE 1

Combination Loads: Snow + Wind +Dead Loads

Wind Speed (mph)	Exposure	Wind Load (psf)	Live Loads (psf) 10	20	Ground Snow Loads (psf) 25	30	35.7	42	50	60
Roof Live /Snow Loads + Dead			**11**	**21**	**22**	**26.2**	**31.0**	**36.3**	**43**	**51.4**
110	**B**	11.3	17.0	24.5	25.2	28.4	32.0	35.9	41.0	47.3
115	**B**	12.3	17.7	25.2	26.0	29.1	32.7	36.7	41.7	48.0
120	**B**	13.4	18.6	26.1	26.8	30.0	33.6	37.5	42.6	48.9
130	**B**	15.8	20.3	27.8	28.6	31.7	35.3	39.3	44.3	50.6
140	**B**	18.3	22.2	29.7	30.5	33.6	37.2	41.2	46.2	52.5
150	**B**	21.0	24.2	31.7	32.5	35.6	39.2	43.2	48.2	54.5
160	**B**	23.9	26.4	33.9	34.6	37.8	41.4	45.4	50.4	56.7
170	**B**	26.9	28.7	36.2	37.0	40.1	43.7	47.7	52.7	59.0
180	**B**	30.2	31.2	38.7	39.4	42.6	46.1	50.1	55.2	61.5
110	**B**	11.3	17.0	24.5	25.2	28.4	32.0	35.9	41.0	47.3
115	**C**	17.3	21.4	28.9	29.7	32.8	36.4	40.4	45.4	51.7
120	**C**	18.8	22.6	30.1	30.8	34.0	37.6	41.6	46.6	52.9
130	**C**	22.1	25.0	32.5	33.3	36.4	40.0	44.0	49.0	55.3
140	**C**	25.6	27.7	35.2	35.9	39.1	42.7	46.6	51.7	58.0
150	**C**	29.4	30.5	38.0	38.8	41.9	45.5	49.5	54.5	60.8
160	**C**	33.4	33.6	41.1	41.8	45.0	48.5	52.5	57.6	63.9
170	**C**	37.7	36.8	44.3	45.0	48.2	51.8	55.7	60.8	67.1
180	**C**	42.3	40.2	47.7	48.5	51.6	55.2	59.2	64.2	70.5

TABLE 2

Amerimax Exterior Home Products
28921 US Hwy 74
Romoland, CA 92585

Carl Putnam, P. E.
3441 Ivylink Place
Lynchburg, VA 24503
(434) 384-2514
carlputnam@comcast.net

PROFESSIONAL ENGINEER
CARL PUTNAM
C 68139
EXP. 6/30/2019
CIVIL
STATE OF CALIFORNIA

May 27 2017

Misc6-2015

Amerimax Structural Properties of Beams, Fascia, Panels and Rafters for Use by Design Professionals

Structural Element	I (in^4) top in compression	I (in^4) bottom in compression	ASSUMES FULL LATERAL BRACING: Max Allowable Moment (top in compression (lbf*ft)	ASSUMES FULL LATERAL BRACING: Max Allowable Moment (bottom in compression (lbf*ft)	Max Allowable Shear (lbf)	Material	E (ksi)	Ftu or Fu (ksi)	Fty or Fy (ksi)	Fcy (ksi)
Rafters										
0.024"x2"x6.625" Aluminum Rafter	2.283	same	298	278	166	3004H34	10100	32	25	22
0.032"x2"x6.625" Aluminum Rafter	3.072	same	563	504	398	3004H34	10100	32	25	22
0.040"x2"x6.625" Aluminum Rafter	3.873	same	866	801	784	3004H34	10100	32	25	22
0.042"x3"x8" Aluminum Rafter	7.907	same	1164	1038	747	3004H34	10100	32	25	22
0.024"x3"x3" Aluminum Rafter	0.445	same	130	124	380	3105H25	10100	23	19	17
0.040"x3"x3" Aluminum Rafter	0.754	same	389	343	1506	3105H25	10100	23	19	17
Solid Panels										
0.018"x2.5"x6" Aluminum Panel	0.265	same	138	109	779	3004H36	10100	35	28	25
0.024"x2.5"x6" Aluminum Panel	0.353	same	253	169	927	3004H34	10100	32	25	22
0.032"x2.5"x6" Aluminum Panel	0.471	same	385	253	1236	3004H34	10100	32	25	22
0.036"x2.5"x6" Aluminum Panel	0.53	same	439	301	1391	3004H34	10100	32	25	22
0.018"x3.5"x12" Aluminum Panel	0.545	same	316	352	450	3004H36	10100	35	28	25
0.024"x3.5"x12" Aluminum Panel	0.727	same	409	473	536	3004H34	10100	32	25	22
0.032"x3.5"x12" Aluminum Panel	0.969	same	568	692	715	3004H34	10100	32	25	22
0.036"x3.5"x12" Aluminum Panel	1.09	same	652	808	804	3004H34	10100	32	25	22
0.018"x2.5"x12" Aluminum Panel	0.25	same	184	141	246	3004H36	10100	35	28	25
0.024"x2.5"x12" Aluminum Panel	0.334	same	315	241	584	3004H36	10100	35	28	25
0.032"x2.5"x12" Aluminum Panel	0.445	same	484	371	1384	3004H36	10100	35	28	25
0.036"x2.5"x12" Aluminum Panel	0.501	same	511	392	1970	3004H34	10100	32	25	22
0.018"x2"x6" Aluminum Panel	0.154	same	133	150	528	3004H36	10100	35	28	25
0.024"x2"x6" Aluminum Panel	0.205	same	196	207	629	3004H34	10100	32	25	22
0.032"x2"x6" Aluminum Panel	0.273	same	294	318	838	3004H34	10100	32	25	22
0.036"x2"x6" Aluminum Panel	0.307	same	333	382	943	3004H34	10100	32	25	22
Aluminum Headers										
0.042"x3"x8" Aluminum Header	7.907	same	1164	1038	747	3004H34	10100	32	25	22
Double 0.042"x3"x8" Aluminum Header	15.814	same	2328	2076	1494	3004H34	10100	32	25	22
Double 0.040"x2"x6.625" Aluminum Header	7.746	same	1732	1602	1568	3004H34	10100	32	25	22
Aluminum Fascia										
California Extruded Fascia	3.09	same	1160	1536	5478	6063T6	10100	30	25	25
Classic Extruded Fascia	6.03	same	3089	3842	13837	6061T6	10100	38	35	35
5.5" Extruded Fascia	3.46	same	1564	1538	3414	6105T5	10100	38	35	35
Alaskan Fascia	3.95	same	2349	1905	4963	6105T5	10100	38	35	35
4"x3" Ibeam	3.617	same	2445	2580	2106	6063T6	10100	30	25	25
7"x4" Ibeam	13.857	same	6718	6718	4244	6105T5	10100	38	35	35
Steel Headers										
0.041"x3"x3" Steel Cloverleaf	0.77	same	1028	1028	6694	ASTM A653 Grade 40	29000	55	40	
Double 0.041"x3"x3" Steel Cloverleaf	1.54	same	2056	2056	13388	ASTM A653 Grade 40	29000	55	40	
12 Gauge Steel C Beam	13.28	same	8549	8549	11504	ASTM A653 Grade 50	29000	65	50	
14 Gauge Steel C Beam	9.04	same	5821	5821	4029	ASTM A653 Grade 50	29000	65	50	
16 Gauge Steel C Beam	7.46	same	4805	4805	2394	ASTM A653 Grade 50	29000	65	50	
Double 12 Gauge Steel C Beam	26.56	same	17098	17098	23008	ASTM A653 Grade 50	29000	65	50	
Double 14 Gauge Steel C Beam	18.08	same	11642	11642	8058	ASTM A653 Grade 50	29000	65	50	
Double 16 Gauge Steel C Beam	14.92	same	9610	9610	4788	ASTM A653 Grade 50	29000	65	50	

PROFESSIONAL ENGINEER
CARL PUTNAM
C 68139
EXP. 6/30/2019
CIVIL
STATE OF CALIFORNIA

May 27 2017

Misc7-2015

CONSTRAINED FOOTING SIZE d (IN)	REQUIRED SLAB AREA PER POST (SQUARE FEET)			
	CONCRETE SLAB THICKNESS (IN)			
	3.5"	5.5"	7.25"	9.25"
20	26	17	13	10
21	31	20	15	12
22	36	23	17	14
23	41	26	20	16
24	47	30	23	18
25	54	34	26	20
26	61	39	30	23
27	70	44	34	26
28	78	50	38	30
29	88	56	42	33
30	98	63	48	37
31	110	70	53	41
32	122	78	59	46
33	135	86	65	51
34	149	95	72	56
35	164	104	79	62
36	180	115	87	68
37	198	126	95	75
38	216	137	104	82
39	236	150	114	89
40	257	163	124	97
41	279	178	135	106
42	303	193	146	114
43	328	208	158	124
44	354	225	171	134
45	382	243	185	145
46	412	262	199	156
47	443	282	214	168
48	476	303	230	180
49	511	325	247	193
50	547	348	264	207

Amerimax Exterior Home Products
28921 US Hwy 74
Romoland, CA 92585

Carl Putnam, P. E.
3441 Ivylink Place
Lynchburg, VA 24503

Misc8-2015

PROFESSIONAL ENGINEER
CARL PUTNAM
C 68139
EXP. 6/30/2018
CIVIL
STATE OF CALIFORNIA

May 27 2017